AGENDA PACKET

DECEMBER 20, 2016 MEETING

	CAL#	***PAGE***
AGENDA		**4**
"SILVERMINE PRESERVE," SILVERMINE DRIVE & LOCKWOOD ROAD, SOUTH SALEM	**Cal#03-13PB**	**Cal# 03-16WP**
Kellard Sessions Review Memo, dated December 14, 2016		**6**
Cover letter, Evans Associates, dated November 15, 2016		**10**
Plans and Plat, Evans Associates/ Bibbo Associates, dated November 14, 2016		**13**
Westchester Land Trust Silvermine Land Management Summary, dated June 29, 2016		**25**
Westchester Land Trust summary, dated May 24, 2016		**29**
Westchester Land Trust Old Church Preserve Management Summary, dated January 2014		**32**
Notice of Public Hearing		**62**
Certified Mailing/Sign Posting Information		**63**
MCPHILLIPS RESIDENCE, 4 ROBINS COURT, SOUTH SALEM	**Cal #52-16 WP**	
Kellard Sessions Review Memo, dated December 14, 2016		**72**
Wetland application, dated October 18, 2016		**74**
Sketch/drawings, Michael Lombardi, dated October 4, 2016		**77**
LAKE KITCHAWAN ASSOCIATION, 166 LAKE KITCHAWAN DRIVE, SOUTH SALEM	**Cal #55-16 WP**	
Kellard Sessions Review Memo, dated December 14, 2016		**81**
Wetland application, dated November 7, 2016		**83**
Sketch/drawings, Michael Lombardi, dated October 11, 2016		**86**
WEISBERG RESIDENCE, 25 BENEDICT ROAD, SOUTH SALEM	**Cal #58-16WP**	
Kellard Sessions Review Memo, dated December 14, 2016		**91**
CAC Memo, dated December 10, 2016		**94**
Cover letter and site development plan application including EAF and previous permits, JMC Planning Engineering, dated November 18, 2016		**95**
Plans, JMC Planning Engineering, dated September 16, 2016/October 20, 2016		**137**

WILDER BALTER PARTNERS, NY STATE ROUTE 22, GOLDENS BRIDGE	**Cal# 10-15 PB**	
Kellard Sessions Review Memo, dated November 30, 2016		**140**
Cover letter, Tim Miller Associates, dated December 12, 2016		**142**
Revised Noise Assessment, Tim Miller Associates, dated December 12, 2016		**144**
VERIZON AT LEON LEVY PRESERVE, SOUTH SALEM	**Cal #6-16PB**	
Kellard Sessions Review Memo, dated December 14, 2016		**160**
Cover letter, Snyder & Snyder, dated November 17, 2016		**163**
Special Use Permit application and support memo, dated November 11, 2016		**165**
Cover letter; Structural Consulting Services, P.C.; dated November 7, 2016		**174**
Various FCC licenses, granted in 2007 and 2008		**176**
Radio Frequency (RF) Site Compliance Report, Pinnacle Telecom Group, dated June 30, 2016		**185**
EAF, dated November 17, 2016		**203**
Plans and Elevations; Structural Consulting Services, P.C.; dated June 2, 2016		**209**
WILD OAKS WATER SYSTEM, NASH ROAD, GOLDENS BRIDGE	**Cal# 8-16PB**	**Cal# 61-16WP**
Kellard Sessions Review Memo, dated December 14, 2016		**211**
Cover letter, Hazen and Sawyer, dated November 29, 2016		**213**
Site Development Plan application (Steps I and II), dated November 22, 2016		**224**
Wetland Activity Permit application, dated November 22, 2016		**227**
Engineering Plans, Hazen and Sawyer, dated October 2015 (except Civil Site Plan is dated November 2016)		**242**
Previous Town of Lewisboro permits and resolutions (4-15PB, 51-14WP, 6-15WP, 54-15WP)		**256**
Cover letter, Department of the Army, dated April 28, 2016		**272**
Cover letter, NYS Office of Parks, Recreation and Historic Preservation, dated March 23, 2015		**276**
NYSDOH Letter To NYSDEC Emergency use Well #4, dated September 6, 2016		**278**
NYSDEC Emergency Authorization to use Well #4, dated October 13, 2016		**280**
Site Photographs		**282**
Wetland Delineation Report, Hazen and Sawyer, dated July 2014		**293**
Appendix A National Wetlands Inventory Classification Descriptions		**308**
Appendix B NYSDEC Environmental Resource Mapper		**313**

Appendix C Hydrologic Soil Groups for Westchester County, New York		**315**
Appendix D Soil Series Descriptions		**319**
Appendix E USACE Wetland Determination Data Forms		**332**
Appendix F Photograph Log		**345**
EAF Form, dated November 22, 2016		**352**
Engineer's Report, Hazen and Sawyer, dated August 2016		**357**
Groundwater Exploration and Pumping Test Program; Leggette, Brashears & Graham, Inc.; dated August 2016		**374**
Appendix I WCDH – Well Site Approvals		**402**
Appendix II Well Completion Reports		**408**
Appendix III Pumping Wells		**413**
Appendix IV 180-Day Water-Level Projections		**447**
Appendix V Onsite Well Monitoring Wells		**451**
VI Piezometers		**470**
VII Offsite Monitoring Wells		**497**
Appendix VIII Stream Gaging		**510**
Appendix IX Water Quality		**519**
Appendix X Physical Parameters		**686**
JACOBSON RESIDENCE, 1208 ROUTE 35, SOUTH SALEM	**Cal #3-15WV**	
No new materials		
MOGIL RESIDENCE, 92 WACCABUC ROAD, GOLDENS BRIDGE	**Cal # 1-16WV**	
No new materials		
PALOMINO RESIDENCE, 292 WACCABUC ROAD, GOLDENS BRIDGE	**Cal# 2-16WV**	
No new materials		
MCGUINNESS RESIDENCE, 17 SCHOOLHOUSE ROAD, SOUTH SALEM	**Cal# 3-16WV**	
Board letter to Building Inspector, dated December 6, 2016		**712**
HOMELAND TOWERS, LLC AND NEW CINGULAR, 117 WACCABUC ROAD, GOLDENS BRIDGE	**Cal #5-12 PB**	**Cal #85-13 WP**
Request for extension of time to submit Wetland Mitigation Status Report due December 1, 2016, emailed November 21, 2016		**713**

TOWN OF LEWISBORO
Westchester County, New York

Planning Board
PO Box 725
Cross River, New York 10518

Tel: (914) 763-5592
Fax: (914) 763-3637
Email: planning@lewisborogov.com

AGENDA

Tuesday, December 20, 2016

Cross River Plaza, Cross River

Note: Meeting will start at 7:30 p.m. and end at or before 11:30 P.M.

I. PUBLIC HEARING

Cal# 3-13PB, 03-16WP
"Silvermine Preserve," Silvermine Drive & Lockwood Road, South Salem, NY, 10590 Sheet 48, Block 10057, Lot 15 and Sheet 51, Block 10051, Lot 104 (Ridgeview Designer Builders, Inc. & Daniel Higgins, owners of record)- Applications for Subdivision, Wetland Activity and Stormwater Permits for the construction of a 13-lot subdivision.

II. EXTENSION OF TIME REQUEST

Cal #5-12 PB, #85-13 WP
Homeland Towers, LLC and New Cingular – 117 Waccabuc Road, Goldens Bridge, NY 10526, Sheet 0011, Block 11137, Lots 35 and 39 (Francis Coyle, owner of record) and Sheet 0011, Block 11137, Lot 52 (Ash Tree Development, owner of record) - Extension of time to submit Wetland Mitigation Status Report due December 1, 2016 per Condition #41 in resolution granting Special Use Permit and Wetland Activity Permit dated December 11, 2012

III. PROJECT REVIEW

Cal #52-16 WP
McPhillips Residence, 4 Robins Court, South Salem, NY 10590, Sheet 53, Block 9834, Lot 151 (David and Autumn McPhillips, owners of record) - Application for Wetland Activity Permit for renovation of a dry hydrant

Cal #55-16 WP
Lake Kitchawan Association, 166 Lake Kitchawan Drive, South Salem, NY 10590, Sheet 42, Block 10287, Lot 22 (Lake Kitchawan Association , owner of record) - Application for Wetland Activity Permit for renovation of a dry hydrant

Cal #58-16WP (previously Cal #56-13WP)
Weisberg Residence, 25 Benedict Road, South Salem, NY, Sheet 33, Block 11155, Lot 153 (Tracey Weisberg, owner of record) - Application for Wetland Permit Approval to replace wood dam with stone and concrete dam at same elevation

IV. SKETCH PLAN REVIEW

Cal #10-15 PB
Wilder Balter Partners, NY State Route 22, Goldens Bridge, NY 10526, Sheet 5, Block 10776, Lots 19, 20 & 21 (Property Group Partners, LLC, owner of record) – Application for a 46 unit MF development on a ±35.4 acre parcel

Cal #7-16PB
Verizon at Leon Levy Preserve, 1411 Route 35, South Salem, NY, Sheet 40, Block 10263, Lot 62A (American Tower, owner of record) – Application for Special Use Permit for equipment and antenna upgrade

Cal# 8-16PB, Cal# 61-16WP
Wild Oaks Water System, Nash Road, Goldens Bridge, NY, Sheet 8, Block 11137, Lot 123 (New York American Water, owner of record) - Application for permanent installation of Well #4 and Well #6.

V. WETLAND VIOLATIONS

Cal #3-15WV
Jacobson Residence, 1208 Route 35, South Salem, NY 10590 Sheet 31, Block 10805, Lot 42 (Kenneth Jacobson, owner of record)

Cal# 2-13WV
Alderman Residence, 11 Birch Spring Road, South Salem, 10590 Sheet 42A, Block 10545, Lot 24 (Kenneth and Patricia Alderman, owners of record)

Cal#1-16WV, Cal#51-16WP
Mogil Residence, 92 Waccabuc Road, Goldens Bridge, NY 10526, Sheet 10, Block 11152, Lot 6 (Arthur Mogil and Mary McCarty Mogil, owners of record)

Cal#2-16WV
Palomino Residence, 292 Waccabuc Road, Goldens Bridge, NY 10526, Sheet 7C, Block 12668, Lot 20 (Gustavo Palomino, owner of record)

Cal#3-16WV
McGuinness Residence, 17 Schoolhouse Road, South Salem, NY 10590, Sheet 22, Block 10802, Lot 35 (Annette and Peter McGuinness, owners of record)

VI. CORRESPONDENCE AND GENERAL BUSINESS

Revision of Town Wetland Law

2017 Meeting Dates

VII. MINUTES OF March 15, 2016; MINUTES OF April 19, 2016; MINUTES OF May 4, 2016; MINUTES OF May 17, 2016; MINUTES OF June 21, 2016; MINUTES OF August 16, 2016; MINUTES OF September 13, 2016; MINUTES OF September 20, 2016; MINUTES OF October 25, 2016 and MINUTES OF November 15, 2016.

KELLARD SESSIONS
CONSULTING, P.C.

John Kellard, P.E.
David Sessions, RLA, AICP

MEMORANDUM

TO: Chairman Jerome Kerner, AIA and
Members of Lewisboro Planning Board

CC: Ciorsdan Conran
Judson Siebert, Esq.

FROM: Jan K. Johannessen, AICP
Joseph M. Cermele, P.E., CFM
David J. Sessions, RLA, AICP
Town Consulting Professionals

DATE: December 14, 2016

RE: Silvermine Preserve Subdivision
Lockwood Road
Sheet 48, Block 10057, Lot 15

Project Description

The applicant, Silvermine Group, is proposing a 13-lot subdivision on ±57.9 acres of land located between Silvermine and Lockwood Roads and within the R-2A Zoning District.

The Planning Board has concluded its review of the conventional subdivision plan and has determined that the proposed subdivision could yield a maximum of 13 lots. The applicant has submitted a 13-lot cluster subdivision plan, which includes a 1,200 l.f. cul-de-sac extending off of Lockwood Road and over 40 acres of open space.

The applicant had previously proposed a 12-lot subdivision on ±55.9 acres; however, the applicant recently purchased an adjoining developed lot located at 105 Lockwood Road and has incorporated this lot into the proposed action for purposes of realigning the road, providing better sight distance, reducing disturbance within the Town regulated wetland buffer, eliminating disturbance within the New York State Department of Environmental Conservation (NYSDEC) wetland adjacent area, and demolishing the existing and constructing a new residence.

SEQRA

The proposed action has been preliminarily identified as an Unlisted Action under the State Environmental Quality Review Act (SEQRA). The Planning Board is conducting a coordinated review and declared itself Lead Agency on June 11, 2013.

Required Approvals

1. Preliminary and Final Subdivision Plat Approval, a Wetland Activity Permit and a Town Stormwater Permit is required from the Planning Board.

2. A public hearing on the Preliminary Plat and Wetland Activity Permit has been scheduled for December 20, 2016.

3. Open Development Area Approval is required from the Town Board.

4. Town Board approval is required for those lots that do not meet the dimensional zoning requirements of the R-1A Zoning District.

5. Construction within the right-of-way of Lockwood Road will require approval from the Town Highway Superintendent.

6. Realty subdivision approval is required from the Westchester County Department of Health (WCDH).

7. Coverage under the NYSDEC SPDES General Permit for Stormwater Discharges from Construction Activities (GP-0-15-002) will be required.

Comments:

1. The applicant has satisfactorily addressed the comments contained within our October 12, 2016 memorandum.

2. It is understood that the primary passive recreational use of the open space parcel will be for walking and hiking. Much of the existing trail network will be effected by the development; however, a "potential nature trail" has been depicted on the construction drawings for some time (prior to WLT involvement). The applicant should identify whether the future trail location is consistent with what the WLT envisions for the property and whether there is likely to be a connection to Silvermine Drive. It is

recommended that the applicant or Westchester Land Trust specifically identify whether horse and bicycle riding will be permitted within the open space parcel.

3. Regarding the proposed easement extending from the parking area to the open space parcel and stormwater facilities:

   a. The portion of the easement running immediately to the south of Lots 7 and 8 does not span the entire width of the parking area, does not include the existing trail that will likely be used for access, and does not include the existing break in the wall. Also, proposed landscaping may interfere with access as proposed. The width of this portion of the easement should be expanded to address these items.

   b. The easement that will provide access to storm basins 1-4 looks "tight"; there is very little room to get equipment around the backside of the basins; it is recommended that these easement areas be expanded to allow better access. Further, an easement should be provided around the bio-retention facility adjacent to Silvermine Drive; this easement should include access to the facility for construction and maintenance.

4. The previously submitted and reviewed wetland mitigation plans (MP-1 and MP-2) should be included in future submissions of the plan set.

5. The bio-retention facility, as depicted on the mitigation plans, should also be shown on the construction plans, as applicable.

In order to expedite the review of subsequent submissions, the applicant should provide annotated responses to each of the comments outlined herein.

Plans Reviewed, prepared by Evans Associates & Bibbo Associates, dated (last revised) November 14, 2016:

- Existing Conditions Map (1 of 12)
- Preliminary Plat (2 of 12)
- Zoning Conformance (3 of 12)
- Construction Plan I (4 of 12)
- Construction Plan II (5 of 12)
- Erosion Control Plan (6 of 12)
- Phasing Plan (7 of 12)
- Profiles and Details (8 of 12)
- Miscellaneous Details (9 of 12)
- Additional Details (10 of 12)

- Stormwater Management (11 of 12 and 12 of 12)

Documents Reviewed:

- Letter, prepared by Evans Associates, dated November 15, 2016
- Letters from Westchester Land Trust, dated May 24, 2016 and June 29, 2016
- Old Church Lane Preserve Comprehensive Conservation & Management Plan, prepared by Westchester Land Trust and dated January 2014

JKJ/JMC/DJS/dc

T:\Lewisboro\Correspondence\LW2041JJ-LWPB-SilvermineSubd-Review-Memo-12-14-16.docx

Evans Associates
Environmental Consulting, Incorporated

November 15, 2016

Honorable Jerome Kerner and Members of the Planning Board
P.O. Box 725
20 North Salem Road
Cross River, NY 10518

Re: Silvermine Preserve Conservation Subdivision
Silvermine Drive and Lockwood Road, South Salem, N.Y.

Dear Chairman Kerner and Members of the Planning Board:

In preparation for the upcoming Public Hearing on this application, enclosed please find nine copies of the following:

Dwg No.	Dwg. Name	Date
EX-1	Existing Conditions Map	11/14/2016
PP-1	Preliminary Plat	11/14/2016
ZON	Zoning Conformance	11/14/2016
CP-1	Construction Plan I	11/14/2016
CP-2	Construction Plan II	11/14/2016
EC-1	Erosion Control Plan	11/14/2016
PH-1	Phasing Plan	11/14/2016
RP-1	Profiles and Details	11/14/2016
D-1	Miscellaneous Details	11/14/2016
D-2	Additional Details	11/14/2016
SW-1	Stormwater Management	11/14/2016
SW-2	Stormwater Management	11/14/2016

These plans depict the addition of the property located at #105 Lockwood Road to the subdivision following its purchase by the applicant, the Silvermine Group, which brings the total acreage of the parcel to 57.976± acres. The proposed conservation subdivision now includes 13 residential lots and one open space parcel of 40.8 acres.

205 Amity Road
Bethany, CT 06524
Tel: 203.393.0690
Fax: 203.393.0196

The October 12, 2016 Kellard Sessions review memo had several recommendations regarding the intersection of the subdivision road with Lockwood Road. As you saw on the site walk in July, using the location of the existing driveway at #105 Lockwood Road as the subdivision access point provides significantly improved sight distance on Lockwood Road over the previous plan. In accordance with the recommendations in the memo, the subdivision road alignment has been adjusted to provide an approximate 90-degree angle at the intersection, and a 50-foot tangent perpendicular to Lockwood Road is provided followed by a 200-foot radius. The newly aligned subdivision road meets the prior subdivision road at Station 7+50, and from that station to the end of the cul-de-sac the subdivision road follows the same horizontal and vertical alignment as the road previously submitted.

Under the current plan, there are no impacts within the 100-foot buffer of the State-regulated wetland. Therefore, the project will not need an Article 24 permit from the New York State Department of Environmental Conservation. Impacts to the Town-regulated 150' wetland buffer have also been avoided to the extent possible, and are limited to the installation of an infiltration system and stormwater pond to handle runoff from the proposed subdivision road. The soil testing for the stormwater measures on the 105 Lockwood Road parcel mentioned in Comment #4 of the Kellard Sessions memo were successfully completed and witnessed on October 14, 2016.

As your Board is aware, the Applicant has been in contact with the Westchester Land Trust (WLT) with respect to the transfer of the 40.8-acre open space parcel once the subdivision is completed. The Applicant has met with representatives of the WLT, and I have walked the property with David Emerson, the Land Project Manager for the WLT. The WLT Executive Committee approved the proposed acquisition of the Silvermine open space parcel on May 2, 2016, and Mr. Emerson has prepared two memos, the first dated May 24, 2016 and a follow-up memo dated June 29, 2016.

The May 24 document outlines WLT's policies on management of WLT preserves, which are "open to the public for hiking or passive recreation, where possible and practical. Motorized vehicles, camping, fires, littering, alcoholic beverages, and removal or disturbance of plants, wildlife, soils, and rocks are prohibited on all WLT preserves." The June 29 document provides further detail regarding such activities as mountain biking and horseback riding, and specifies that maintenance of the trails and open space parcel will be the responsibility of WLT staff working with local volunteers. There are currently five WLT properties in Lewisboro that are open to the public, and the Silvermine Preserve parcel would bring the total to six while increasing the WLT protected land area by 22% in the Town. As reference, a copy of the Old Church Lane Preserve "Comprehensive Conservation & Management Plan" (July 2014) has been provided to give the Board a sense of the type of management plan the WLT prepares once a parcel has been transferred.

Finally, in response to the concerns raised by the Conservation Advisory Council regarding the access to and maintenance of the proposed stormwater practices that are located within the open space parcel, we offer the following clarification:

- There is an easement for "access, grading, utilities and drainage" identified on the plans. This easement is entirely within the open space parcel except for a portion over the common drives to serve Lots 1, 2 and 3. Access for equipment, should it be necessary, will be from the subdivision road at approximately station 4+50, or from the end of the cul-de-sac in the northern portion of the site.
- The design of the stormwater practices is such that they will require only minimal inspection or maintenance once they are constructed and vegetation has been established. However, it will be the responsibility of the Homeowners Association to ensure that the practices are maintained in accordance with NYS DEC GP-0-15-003, and that the necessary inspection forms are submitted to the Town each year.
- Although it is too early in the approval process to provide a draft HOA agreement, one will be provided at the appropriate time prior to final subdivision approval, and it will cover the maintenance of the stormwater practices. The HOA will also be responsible for maintaining the private road serving the homes and the fire storage tank.

We trust that these materials respond to the comments of the Planning Board and we look forward to the Public Hearing on December 20, 2016. Please do not hesitate to call me if there are any questions.

Sincerely,

Evans Associates Environmental Consulting, Inc.

Beth Evans

Beth Evans
Principal

cc: Mr. Eric Moss (w/encl)
Mr. Tim Allen (via email)
Mr. David Emerson (via email)

Evans Associates Environmental Consulting, Inc. 205 Amity Road Bethany, Connecticut 06524
Tel: 203.393.0690 Fax: 203.393.0196

APPROVED BY RESOLUTION OF THE LEWISBORO TOWN PLANNING BOARD.

CHAIRMAN DATE

SECRETARY DATE

TOWN ENGINEER DATE

APPROVED FOR FILING IN THE WESTCHESTER COUNTY CLERK'S OFFICE, DIVISION OF LAND RECORDS

DANIEL HIGGINS, OWNER DATE
RIDGEVIEW DESIGNER BUILDERS, INC.

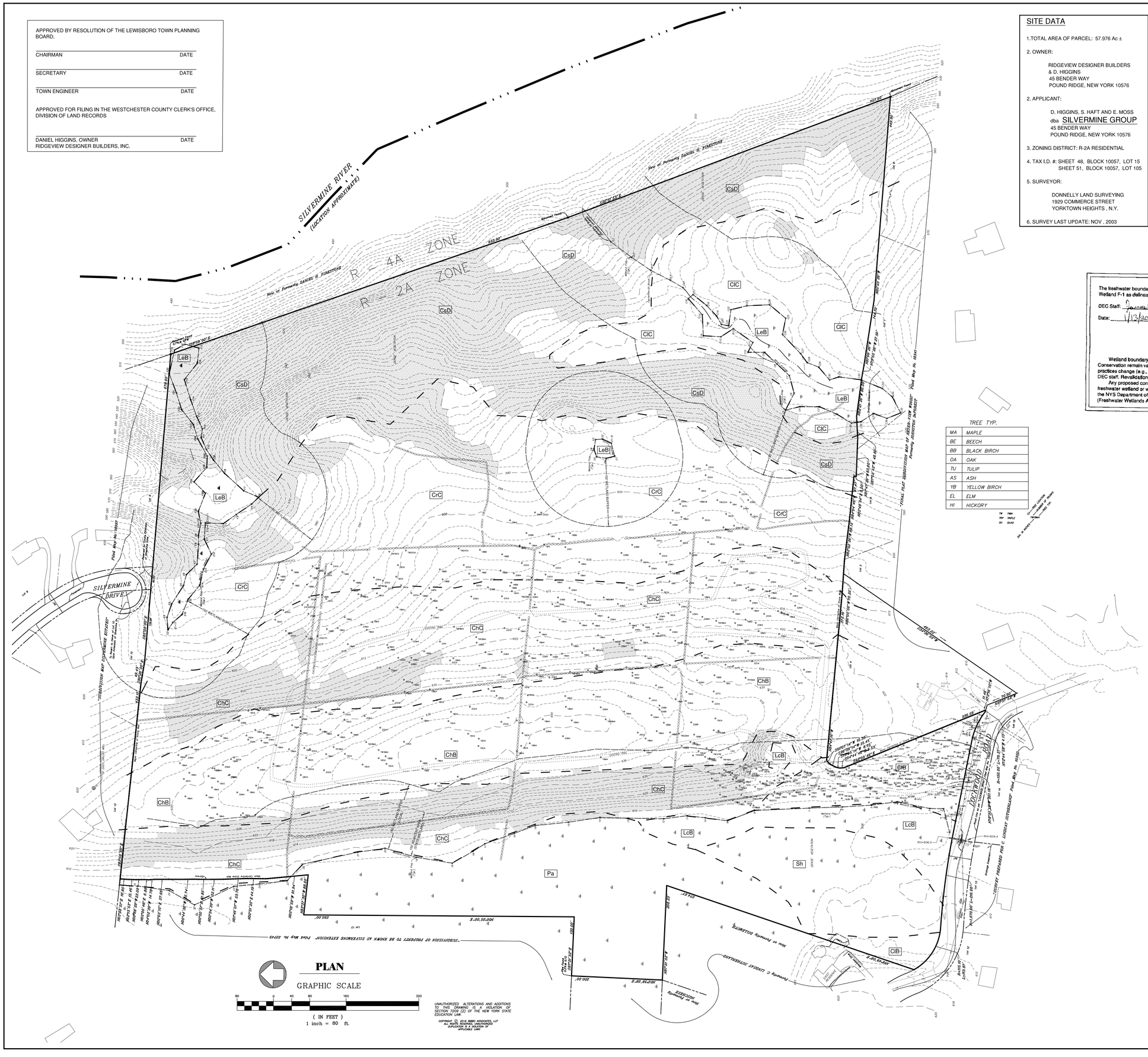

PLAN

GRAPHIC SCALE

(IN FEET)
1 inch = 80 ft.

UNAUTHORIZED ALTERATIONS AND ADDITIONS TO THIS DRAWING IS A VIOLATION OF SECTION 7209 (2) OF THE NEW YORK STATE EDUCATION LAW.

COPYRIGHT © 2014 BIBBO ASSOCIATES, LLP
ALL RIGHTS RESERVED. UNAUTHORIZED DUPLICATION IS A VIOLATION OF APPLICABLE LAWS

SITE DATA

1.TOTAL AREA OF PARCEL: 57.976 Ac ±

2. OWNER:

RIDGEVIEW DESIGNER BUILDERS
& D. HIGGINS
45 BENDER WAY
POUND RIDGE, NEW YORK 10576

2. APPLICANT:

D. HIGGINS, S. HAFT AND E. MOSS
dba SILVERMINE GROUP
45 BENDER WAY
POUND RIDGE, NEW YORK 10576

3. ZONING DISTRICT: R-2A RESIDENTIAL

4. TAX I.D. #: SHEET 48, BLOCK 10057, LOT 15
SHEET 51, BLOCK 10057, LOT 105

5. SURVEYOR:

DONNELLY LAND SURVEYING
1929 COMMERCE STREET
YORKTOWN HEIGHTS , N.Y.

6. SURVEY LAST UPDATE: NOV , 2003

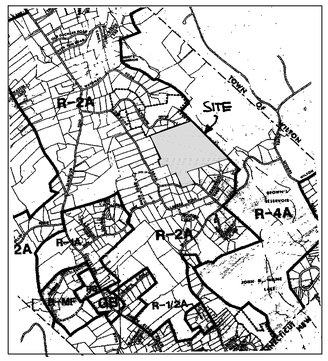

LOCATION MAP
1" = 2000'

The freshwater boundary as re
Wetland F-1 as delineated by Evans Associates Environmental Consulting Inc. on December 2, 2010

DEC Staff: [signature]

Date: 1/12/2011

Surveyor/Engineer: Timothy S. Allen P.E.

SEAL: [signature]

Wetland boundary delineations as validated by the New York State Department of Environmental Conservation remain valid for 10 years unless existing exempt activities, area hydrology, or land use practices change (e.g., agricultural to residential). After 10 years the boundary must be revalidated by DEC staff. Revalidation may include a new delineation and survey of the wetland boundary.

Any proposed construction, grading, filling, excavating, clearing or other regulated activity in the freshwater wetland or within 100 feet of the wetland boundary as depicted on this plan requires a permit from the NYS Department of Environmental Conservation under Article 24 of the Environmental Conservation Law (Freshwater Wetlands Act) prior to commencement of work.

TREE TYP.

MA	MAPLE
BE	BEECH
BB	BLACK BIRCH
OA	OAK
TU	TULIP
AS	ASH
YB	YELLOW BIRCH
EL	ELM
HI	HICKORY

TW TWIN
TRP TRIPLE
QU QUAD

DIA. IN INCHES
CONIFER
DECIDUOUS
DEAD TREE

SOIL LEGEND

CrC USDA SOIL CLASSIFICATION

SOIL BOUNDARY

SYMBOL	DESCRIPTION	HYD. SOIL TYPE
ChB	CHARLTON	B
ChC	CHARLTON	B
ClB	CHARLTON STONY	B
CrC	CHARLTON CHATFIELD	B
CsD	CHATFIELD CHARLTON	B
HrF	HOLLIS	C
LcB	LEICESTER	C
LeB	LEICESTER	C
Pa	PALMS MUCK	D
Sh	SUN	D

SITE LEGEND

EXISTING 2' CONTOUR

420 EXISTING 10' CONTOUR

LAND WITH SLOPES > 15%
HAVING A MINIMUM LENGTH
(DOWNSLOPE) OF 25 FEET

EXISTING WETLAND
AS FLAGGED BY: TIM MILLER ASSOCIATES
CONFIRMED BY EVANS ASSOCIATES

150' WETLAND SETBACK

100' STATE WETLAND ADJACENT AREA

EX. PROPERTY LINE

SHEET INDEX

SHT #	DWG #	TITLE
1	EX-1	EXISTING CONDITIONS
2	PP-1	PRELIMINARY PLAT
3	ZON	ZONING CONFORMANCE
4	CP-1	CONSTRUCTION PLAN I
5	CP-2	CONSTRUCTION PLAN II
6	EC-1	EROSION CONTROL PLAN
7	PH-1	PHASING PLAN
8	RP-1	PROFILES AND DETAILS
9	D-1	MISCELLANEOUS DETAILS
10	D-2	ADDITIONAL DETAILS
11	SW-1	STORMWATER MANAGEMENT
12	SW-2	STORMWATER MANAGEMENT
	MP-1	OVERALL WETLAND IMPACT & MITIGATION PLAN
	MP-2	MITIGATION PLANTING PLAN
	MP-3	MITIGATION PLANTING PLAN

DATE: 05-09-05

REVISION

06-16-11	Conservation Plan
09-01-12	Review / Response
11-10-14	Review / Response
2-17-15	Review / Response
7-20-15	Review / Response
12-10-15	Review / Response
3-16-16	Review / Response
10-26-16	New Road
11-14-16	Revision

ENGINEERING CONSULTANT:
BIBBO ASSOCIATES, L.L.P.
CONSULTING ENGINEERS AND PLANNERS
MILL POND OFFICES
283 ROUTE 100, SUITE 203
SOMERS, NEW YORK
TEL (914) 277-5805

TIMOTHY S. ALLEN, P.E.

ENVIRONMENTAL CONSULTANT:
EVANS ASSOCIATES
ENVIRONMENTAL CONSULTING, INC.
205 Amity Road
Bethany, Connecticut 06524
T. (203) 393-0700
F. (203) 393-0196

DWG. TITLE:
EXISTING CONDITIONS MAP
CONSERVATION SUBDIVISION

PROJECT NAME:
SILVERMINE PRESERVE
SILVERMINE DRIVE & LOCKWOOD ROAD
TOWN OF LEWISBORO, NEW YORK

Dwn. by:
Checked by:
Doc. ID:
EAEC Proj. No.: 809
DWG. NO.:

EX-1

SHEET 1 OF 12

P:\Projects\MOSS-SILVER\dwg\Moss - Silvermine Subdivision 11-7-15.dwg EXISTING COND. 11/14/2016 11:09:39 AM, NHaverstraw, 1:1

ZONING CONFORMANCE: CONSERVATION SUBDIVISION

	REQUIRED	PROVIDED												
FRONT YARD		LOT#1	LOT#2	LOT#3	LOT#4	LOT#5	LOT#6	LOT#7	LOT#8	LOT#9	LOT#10	LOT#11	LOT#12	LOT#13
+ FROM STREET CENTER LINE	65'	n/a	n/a	n/a	n/a	146.4'	78.7'	66.5'	256.4'	65.4'	65.1'	n/a	n/a	89.5'
+ FROM FRONT LOT LINE	40	606'	338.7'	211.9'	166.2'	121.4'	53.7'	41.3'	231.6'	40.4'	40.0'+	68.2'	163.9'	163.9'
SIDE YARD	30'	139.5'	40.8'	30.3'	30.0'	37.5'	88.5'	36.4'	71.6'	31.8'	50.3'	65.7'	48.9'	44.4'
REAR YARD	40'	54.7'	67.4'	56.3'	59.8'	92.0'	50.3'	47.7'	63.0'	166.1'	126.1'	46.5'	82.7'	87.5'
BUILDING COVERAGE	12 %	3.2 %	6.5%	6.2 %	6.4 %	5.9 %	4.5 %	6.0 %	4.5 %	6.5 %	6.9 %	7.0 %	6.4 %	4.8 %
BUILDING HEIGHT	2.5 STORIES	2.5	2.5	2.5	2.5	2.5	2.5	2.5	2.5	2.5	2.5	2.5	2.5	2.5
	35' MAX.	<35'	<35'	<35'	<35'	<35'	<35'	<35'	<35'	<35'	<35'	<35'	<35'	<35'
LOT WIDTH	150' DIA. CIRCLE	150'	150'	150'	150'	150'	150'	150'	150'+	150'+	150' +	150' +	150' +	150' +
LOT DEPTH	300' MAX	732'	455.4'	327.1	293'	256.2'	256.9'	259.6'	357.1'	253.1'	212.6'	190.4'	323'	300'
ACTUAL LOT AREA	MIN 1 AC.	1.97 AC +/-	0.98 AC +/- (SEE NOTE 1)	1.03 AC +/- (SEE NOTE 1)	1.0 AC +/-	1.06 AC +/-	1.40 AC +/-	1.05 AC +/-	1.43 AC +/-	0.98 AC +/- (SEE NOTE 1)	0.92 AC +/- (SEE NOTE 1)	0.91 AC +/- (SEE NOTE 1)	1.07 AC +/-	1.33 AC +/-
MIN LOT AREA REQ'D.*		2.44 AC +/-	1.52 AC +/-	1.09 AC +/-	1.0 AC +/-	1.0 AC +/-	1.0 AC	1.0 AC	1.19 AC	1.0 AC	1.0 AC	1.0 AC	1.07 AC +/-	1.33 AC +/-
MIN LOT AREA PROVIDED **		1.58 AC (SEE NOTE 1)	0.82 AC +/- (SEE NOTE 1)	1.0 AC +/- (SEE NOTE 1)	1.0 AC +/-	1.6 AC +/-	1.40 AC +/-	1.05 AC +/-	1.43 AC +/-	0.98 AC +/- (SEE NOTE 1)	0.92 AC +/- (SEE NOTE 1)	0.91 AC +/- (SEE NOTE 1)	1.07 AC +/-	1.33 AC +/-
STREET FRONTAGE	25'	25'	26'	52'	110'	185'	523'	260'	41'	165'	183'	110'	52'	380'
CONTIGUOUS BUILDABLE AREA ***	35,000 SFMIN.	68,759 SF +/-	35,840 SF +	39,721 SF +/-	42,362 SF +/-	44,407 SF +/-	48,737 SF +/-	45,669 SF +/-	58,315 SF +/-	41,856 SF +/-	40,075 SF +/-	40,510 SF +/-	43,680 SF+/-	58,055 SF+/-

* REQUIRED LOT AREA BASED ON LOT DEPTH §220-25B

** LAND EXCLUDING AREAS WITH LESS THAN 1/3 THE REQUIRED LOT WIDTH

*** LAND EXCLUDING STEEP SLOPES (>15%), WETLANDS PER §220-10E(2)(a) OF THE AMENDED ZONING CODE

The freshwater boundary as represented on these plans accurately depicts the limits of Freshwater Wetland F-1 as delineated by Evans Associates Environmental Consulting Inc. on December 2, 2010

DEC Staff: [signature]

Date: 1/13/2011

Surveyor/Engineer: Timothy S. Allen P.E.

SEAL [STATE OF NEW YORK · TIMOTHY S. ALLEN · LICENSED PROFESSIONAL ENGINEER · 073434] [signature]

Wetland boundary delineations as validated by the New York State Department of Environmental Conservation remain valid for 10 years unless existing exempt activities, area hydrology, or land use practices change (e.g., agricultural to residential). After 10 years the boundary must be revalidated by DEC staff. Revalidation may include a new delineation and survey of the wetland boundary.

Any proposed construction, grading, filling, excavating, clearing or other regulated activity in the freshwater wetland or within 100 feet of the wetland boundary as depicted on this plan requires a permit from the NYS Department of Environmental Conservation under Article 24 of the Environmental Conservation Law (Freshwater Wetlands Act) prior to commencement of work.

REVIEWED FOR COMPIANCE WITH THE PLANNING BOARD RESOLUTION, DATED________________

________________ DATE:________

JOSEPH M. CERMELE, P.E.
KELLARD SESSIONS CONSULTING, P.C.
CONSULTING TOWN ENGINEERS

DATE: 05-09-05

REVISION	
06-16-11	Conservation Plan
09-01-12	Review / Response
11-10-14	Review / Response
2-17-15	Review / Response
7-20-15	Review / Response
12-10-15	Review / Response
3-16-16	Review / Response
10-26-16	New Road
11-14-16	Revision

SITE LEGEND

- 150' WETLAND SETBACK
- 100' STATE WETLAND ADJACENT AREA
- WETLAND BOUNDARY (STATE AND LOCAL) (FLAGGED BY TIM MILLER ASSOCIATES) RECONFIRMED BY EVANS ASSOCIATES, 2010
- PROPOSED LOT LINE
- PROPOSED MINIMUM LOT SIZE = 40,000 SF
- EX. STONE WALL AS LOT LINE
- DRAINAGE, UTILITY AND ACCESS EASEMENT
- PROPOSED BUILDING SETBACKS: (BASED ON R-1A) AND "BUILDING ENVELOPE" FRONT YARD = 40' SIDE YARD = 30' REAR YARD = 40'
- LIMIT OF DISTURBANCE TOTAL ESTIMATED DISTURBANCE = 13.9 Ac ±
- SB-1 PROPOSED STORMWATER TREATMENT AREA
- PROPOSED DWELLING AND DRIVEWAY
- PROPOSED "BUILDING ENVELOPE"
- PROPOSED UNDERGROUND UTILITY LINES
- PROPOSED S.S.T.A
- 100' MIN PROPOSED WELL WITH WELL SETBACK

NOTE: THE PROPOSED DWELLING, FUTURE GARAGE, BARN, SHED, OR POOL SHALL BE LOCATED WITHIN THE BUILDING ENVELOPE SHOWN HEREON. THE PURPOSE OF THIS BUILDING ENVELOPE IS TO ALLOW FLEXIBILITY IN THE LOCATION OF THE DWELLING AND ACCESSORY STURCTURES AND IMPROVEMENTS. THE LOCATION OF THE PROPOSED DRIVEWAY, SEPTIC SYSTEM, WELL AND STORMWATER STRUCTURES AND FACILITIES SHALL BE LOCATED, AS SHOWN ON THE APPROVED CONSTRUCTION DRAWINGS. ANY DEVIATION SHALL REQUIRE PLANNING BOARD APPROVAL.

AREA IN LOTS	13.55 Ac
AREA IN ROADS	1.55 Ac
AREA IN OPEN SPACE	40.80 Ac
TOTAL AREA OF PROPERTY	55.90 Ac

UNAUTHORIZED ALTERATIONS AND ADDITIONS TO THIS DRAWING IS A VIOLATION OF SECTION 7209 (2) OF THE NEW YORK STATE EDUCATION LAW.

COPYRIGHT © 2016 BIBBO ASSOCIATES, LLP ALL RIGHTS RESERVED. UNAUTHORIZED DUPLICATION IS A VIOLATION OF APPLICABLE LAWS

APPROVED BY RESOLUTION OF THE LEWISBORO TOWN PLANNING BOARD.

CHAIRMAN ________ DATE

SECRETARY ________ DATE

APPROVED FOR FILING IN THE WESTCHESTER COUNTY CLERK'S OFFICE, DIVISION OF LAND RECORDS

DANIEL HIGGINS, OWNER ________ DATE
RIDGEVIEW DESIGNER BUILDERS, INC.

NOTES:

1. THERE SHALL BE NO FURTHER SUBDIVISION OF THE LOTS SHOWN ON THIS PLAT.
2. THE DRAINAGE EASEMENTS (OR THE DRAINAGE DISCHARGE POINTS) SHOWN HEREON ESTABLISH THE PERPETUAL RIGHT TO DISCHARGE STORMWATER RUNOFF FROM THE PRIVATE ROAD AND COMMON DRIVE AND FROM THE SURROUNDING AREA ONTO AND OVER THE AFFECTED PREMISES BY MEANS OF PIPES, CULVERTS OR DITCHES, OR A COMBINATION THEREOF, TOGETHER WITH THE RIGHT OF THE HOLDER OF FEE TITLE TO THE PRIVATE ROAD OR COMMON DRIVE, OR HIS REPRESENTATIVES, TO ENTER SAID PREMISES FOR PURPOSES OF MAKING SUCH INSTALLATIONS AND DOING SUCH MAINTENANCE WORK AS SAID HOLDER OF FEE TITLE MAY DEEM NECESSARY TO ADEQUATELY DRAIN THE COMMON DRIVE AND SURROUNDING AREA.
3. ALL PHASES OF THE CONSTRUCTION OF THE NEW ROAD AND COMMON DRIVEWAY AND DRAINAGE IMPROVEMENTS MUST BE INSPECTED BY THE TOWN CONSULTING ENGINEER. THE OWNER IS RESPONSIBLE TO NOTIFY THE TOWN ENGINEER OF THE CONSTRUCTION SCHEDULE AND DATE WHEN INSPECTIONS WILL BE REQUIRED.
4. PRIOR TO THE ISSUANCE OF ANY INDIVIDUAL BUILDING PERMIT, THE NEW ROAD AND COMMON DRIVEWAY AND DRAINAGE IMPROVEMENTS SHALL BE SUBSTANTIALLY COMPLETED TO THE SATISFACTION OF THE TOWN CONSULTING ENGINEER.
5. PRIOR TO THE ISSUANCE OF ANY INDIVIDUAL CERTIFICATE OF OCCUPANCY, AN AS-BUILT PLAN OF THE COMMON DRIVEWAY AND DRAINAGE IMPROVEMENTS SHALL BE PREPARED BY A LICENSED SURVEYOR AND SUBMITTED TO THE TOWN CONSULTING ENGINEER, AND THE COMMON DRIVEWAY AND DRAINAGE IMPROVEMENTS SHALL BE DEEMED "COMPLETE" TO THE SATISFACTION OF THE TOWN CONSULTING ENGINEER.
6. ALL SITE UTILITY FACILITIES AND LINES (ELECTRIC, TELEPHONE, CABLE, SEWER AND WATER) SHALL BE INSTALLED UNDERGROUND.
7. ANY FUTURE OIL STORAGE TANK FACILITIES, IF UTILIZED, SHALL BE RESTRICTED TO THE CONFINES OF THE PRINCIPAL BUILDING BASEMENT, GARAGE OR A FOUNDATION VAULT.
8. NO WORK, INCLUDING, BUT NOT LIMITED TO, REGRADING, DISPOSITION OR EXTRACTION OF MATERIALS OR VEGETATION, OR PHYSICAL ALTERATION IN, UPON, OR WITHIN 150 FEET (AS MAY BE AMENDED FROM TIME TO TIME) OF SITE WETLANDS, WATERCOURSES OR WATER BODIES, EXCEPT AS AUTHORIZED BY A DULY ISSUED WETLAND ACTIVITY PERMIT SHALL BE PERMITTED.
9. PRIOR TO THE COMMENCEMENT OF ANY SITE WORK OR CONSTRUCTION ACTIVITY, EROSION AND SEDIMENTATION CONTROLS SHALL BE INSTALLED AND SHALL BE SUBJECT TO CONTINUAL MAINTENANCE AND ADDITIONAL CONTROLS AS MAY BE REQUIRED BY THE BUILDING INSPECTOR, WETLANDS INSPECTOR, TOWN CONSULTING ENGINEER, OR THEIR AUTHORIZED AGENTS. A NEW YORK STATE LICENSED SURVEYOR IS REQUIRED TO LOCATE AND FIELD DELINEATE THE LIMITS OF EASEMENT AREAS AND REGULATED WETLANDS BUFFER AREAS PRIOR TO ANY RELATED SITE CLEARING, DISTURBANCE, EXCAVATION, OR CONSTRUCTION.
10. STORMWATER DRAINAGE SHALL BE CONTROLLED AT ALL TIMES DURING AND AFTER CONSTRUCTION TO PREVENT EROSION OF THE SITE AREA AND TO PREVENT SEDIMENTATION UPON AREAS ADJACENT TO THE CONSTRUCTION SITE, PARTICULARLY OFF-SITE LOCATIONS AND WETLANDS/WATERCOURSES, AND WETLAND BUFFER AREA RESOURCES. SILT FENCING, ANTI-TRACKING APRONS AND ALL OTHER REQUIRED EROSION AND SEDIMENTATION CONTROL MEASURES SHALL BE REGULARLY INSPECTED AND MAINTAINED IN AN ORDERLY AND FUNCTIONING MANNER. ADDITIONAL SUPPLIES OF SILT FENCING SHALL BE KEPT ON THE SITE DURING CONSTRUCTION FOR USE AS NEEDED.
11. ANY SUBSTANTIAL CHANGE IN THE LOCATION OF HOUSES, DRIVEWAYS AND STORMWATER CONTROL IMPROVEMENTS OR UTILITIES AS SHOWN ON THE FINAL CONSTRUCTION PLANS SHALL REQUIRE THE PRIOR REVIEW AND APPROVAL OF THE PLANNING BOARD.
12. ALL DISTURBED AREAS SHALL BE REGRADED AND COVERED WITH A MINIMUM OF FOUR (4) INCHES OF TOPSOIL, THEN SEEDED OR PLANTED WITH TREES, SHRUBS OR OTHER PERENNIAL GROUNDCOVERS. REGRADED AREAS SHALL NOT EXCEED A SLOPE OF 1:2; AND SAID SLOPES SHALL BE STABILIZED UTILIZING JUTE NETTING (OR EQUIVALENT) OR SHRUB PLANTINGS.
13. REFER TO DRAWING "ZON" FOR NOTATIONS REGARDING "BUILDING ENVOPE".
14. IT IS CURRENTLY PROPOSED THAT THE OPEN SPACE PARCEL SHALL BE OWNED IN COMMON THROUGH A HOME-OWNER'S ASSOCIATION. ACCESS TO THIS OPEN SPACE WILL BE AVAILABLE TO THE PUBLIC, WITH CERTAIN RESTRICTIONS, AT LOCATIONS TO BE DETERMINED BY THE PLAANING BOARD AND DESIGNATED ON THE FINAL PLANS.
15. THE APPLICANT'S ENGINEER, TOWN ENGINEER AND TOWN HIGHWAY SUPERINTENDANT SHALL SURVEY THE EXISTING CONDITIONS OF LOCKWOOD ROAD IN THE AREA ADJACENT TO THE PROPOSED NEW ROAD ENTRANCE. THEIR COMMENTS / RECOMMENDATIONS SHALL BE REVIEWED WITH THE PLANNING BOARD AND, IF REQUIRED BY THE BOARD, NOTATIONS SHALL BE PLACED ON THE FINAL CONSTRUCTION PLANS REGARDING ANY NECESSARY IMPROVEMENTS TO THIS AREA.

SPECIAL NOTES:

1. AS THE PROPOSED ROAD IS TO BE PRIVATELY OWNED AND MAINTAINED, OPEN DEVELOPMENT AREA APPROVAL OF THE TOWN BOARD IS REQUIRED.
2. IN ORDER THAT CERTAIN LOTS (1, 2, 3, 6, 9, 10 & 11) PRESERVE EXISTING STONE WALLS AS LOT LINES, APPROVAL FROM THE TOWN BOARD IS ALSO REQUIRED FOR VARIANCE FROM THE DIMENSIONAL REQUIREMENTS OF § 200 - 88 B AND § 200 - 10E(2)(c) OF TOWN CODE. REFER TO DRAWING "ZON" FOR SPECIFIC INSTANCES WHERE APPROVAL OF NON-CONFORMANCE IS REQUIRED.
3. DURING CONSTRUCTION, SOME EXISTING STONE WALLS WILL BE REMOVED TO MAKE WAY FOR THE PROPOSED SITE IMPROVEMENTS. STONE FROM THEASE WALLS SHALL BE RELOCATED ALONG NEW LOT LINES. ALL EXISTING STONE WALLS SHALL BE PRESERVED AS LOT LINES WHERE INDICATED ON THIS PLAN.

ENGINEERING CONSULTANT:
BIBBO ASSOCIATES, L.L.P.
CONSULTING ENGINEERS AND PLANNERS
MILL POND OFFICES
293 ROUTE 100, SUITE 203
SOMERS, NEW YORK
TEL (914) 277-5805

TIMOTHY S. ALLEN, P.E.

ENVIRONMENTAL CONSULTANT:
EVANS ASSOCIATES
ENVIRONMENTAL CONSULTING, INC.
205 Amity Road
Bethany, Connecticut 06524
T. (203) 393-0690
F. (203) 393-0196

DWG. TITLE:
PRELIMINARY PLAT CONSERVATION SUBDIVISION

PROJECT NAME:
SILVERMINE PRESERVE
SILVERMINE DRIVE & LOCKWOOD ROAD
TOWN OF LEWISBORO, NEW YORK

Dwn. by:	
Checked by:	
Doc. ID:	
EAEC Proj. No.:	809
DWG. NO.:	PP-1

SHEET 2 OF 12

P:\Projects\MOSS-SILVER\dwg\Moss - Silvermine Subdivision 11-7-16.dwg, PRELIMINARY PLAT 2of2, 11/14/2016 11:10:05 AM, NHawvermale, 1:1

PLAN

GRAPHIC SCALE

50 0 25 50 100 200

(IN FEET)
1 inch = 50 ft.

UNAUTHORIZED ALTERATIONS AND ADDITIONS TO THIS DRAWING IS A VIOLATION OF SECTION 7209 (2) OF THE NEW YORK STATE EDUCATION LAW.

COPYRIGHT © 2016 BIBBO ASSOCIATES, LLP
ALL RIGHTS RESERVED. UNAUTHORIZED DUPLICATION IS A VIOLATION OF APPLICABLE LAWS

APPROVED BY RESOLUTION OF THE LEWISBORO TOWN PLANNING BOARD.

CHAIRMAN DATE

SECRETARY DATE

TOWN ENGINEER DATE

APPROVED FOR FILING IN THE WESTCHESTER COUNTY CLERK'S OFFICE, DIVISION OF LAND RECORDS

DANIEL HIGGINS, OWNER DATE
RIDGEVIEW DESIGNER BUILDERS, INC.

SITE LEGEND

- 150' WETLAND SETBACK
- 100' STATE WETLAND ADJACENT AREA
- WETLAND BOUNDARY (STATE AND LOCAL) (FLAGGED BY TIM MILLER ASSOCIATES) RECONFIRMED BY EVANS ASSOCIATES, 2010
- SLOPES > 15%
- PROPOSED LOT LINE
  PROPOSED MINIMUM LOT SIZE = 40,000 SF
- EX. STONE WALL AS LOT LINE
- PROPOSED BUILDING SETBACKS: (BASED ON R-1A) AND "BUILDING ENVELOPE"
  FRONT YARD = 40'
  SIDE YARD = 30'
  REAR YARD = 40'

NOTE: THE PROPOSED DWELLING, FUTURE GARAGE, BARN, SHED, OR POOL SHALL BE LOCATED WITHIN THE BUILDING ENVELOPE SHOWN HEREON. THE PURPOSE OF THIS BUILDING ENVELOPE IS TO ALLOW FLEXIBILITY IN THE LOCATION OF THE DWELLING AND ACCESSORY STURCTURES AND IMPROVEMENTS. THE LOCATION OF THE PROPOSED DRIVEWAY, SEPTIC SYSTEM, WELL AND STORMWATER STRUCTURES AND FACILITIES SHALL BE LOCATED, AS SHOWN ON THE APPROVED CONSTRUCTION DRAWINGS. ANY DEVIATION SHALL REQUIRE PLANNING BOARD APPROVAL.

- PROPOSED DWELLING AND DRIVEWAY
- DRAINAGE, UTILITY AND ACCESS EASEMENT
- BE BE BE PROPOSED "BUILDING ENVELOPE"
- PROPOSED MONUMENT

ZONING CONFORMANCE: CONSERVATION SUBDIVISION

	REQUIRED	PROVIDED												
		LOT#1	LOT#2	LOT#3	LOT#4	LOT#5	LOT#6	LOT#7	LOT#8	LOT#9	LOT#10	LOT#11	LOT#12	LOT#13
FRONT YARD + FROM STREET CENTER LINE	65'	n/a	n/a	n/a	n/a	146.4'	78.7'	66.5'	256.4'	65.4'	65.1'	n/a	n/a	89.5'
+ FROM FRONT LOT LINE	40	606'	338.7'	211.9'	166.2'	121.4'	53.7'	41.3'	231.6'	40.4'	40.0'*	68.2'	163.9'	163.9'
SIDE YARD	30'	139.5'	40.8'	30.3'	30.0'	37.5'	88.5'	36.4'	71.6'	31.8'	50.3'	65.7'	48.9'	44.4'
REAR YARD	40'	54.7'	67.4'	56.3'	59.8'	92.0'	50.3'	47.7'	63.0'	166.1'	126.1'	46.5'	82.7'	87.5'
BUILDING COVERAGE	12 %	3.2 %	6.5%	6.2 %	6.4 %	5.9 %	4.5 %	6.0 %	4.5 %	6.5 %	6.9 %	7.0 %	6.4 %	4.8 %
BUILDING HEIGHT	2.5 STORIES	2.5	2.5	2.5	2.5	2.5	2.5	2.5	2.5	2.5	2.5	2.5	2.5	2.5
	35' MAX.	<35'	<35'	<35'	<35'	<35'	<35'	<35'	<35'	<35'	<35'	<35'	<35'	<35'
LOT WIDTH	150' DIA. CIRCLE	150'	150'	150'	150'	150'	150'	150'	150'+	150'+	150' +	150' +	150' +	150' +
LOT DEPTH	300' MAX	732'	455.4'	327.1	293'	256.2'	256.9'	259.6'	357.1'	253.1'	212.6'	190.4'	323'	300'
ACTUAL LOT AREA	MIN 1 AC.	1.97 AC +/-	0.98 AC +/- (SEE NOTE 1)	1.03 AC +/- (SEE NOTE 1)	1.0 AC +/-	1.06 AC +/-	1.40 AC +/-	1.05 AC +/-	1.43 AC +/-	0.98 AC +/- (SEE NOTE 1)	0.92 AC +/- (SEE NOTE 1)	0.91 AC +/- (SEE NOTE 1)	1.07 AC +/-	1.33 AC +/-
MIN LOT AREA REQ'D.*		2.44 AC +/-	1.52 AC +/-	1.09 AC +/-	1.0 AC +/-	1.0 AC +/-	1.0 AC	1.0 AC	1.19 AC	1.0 AC	1.0 AC	1.0 AC	1.07 AC +/-	1.33 AC +/-
MIN LOT AREA PROVIDED **		1.58 AC (SEE NOTE 1)	0.82 AC +/- (SEE NOTE 1)	1.0 AC +/- (SEE NOTE 1)	1.0 AC +/-	1.6 AC +/-	1.40 AC +/-	1.05 AC +/-	1.43 AC +/-	0.98 AC +/- (SEE NOTE 1)	0.92 AC +/- (SEE NOTE 1)	0.91 AC +/- (SEE NOTE 1)	1.07 AC +/-	1.33 AC +/-
STREET FRONTAGE	25'	25'	26'	52'	110'	185'	523'	260'	41'	165'	183'	110'	52'	380'
CONTIGUOUS BUILDABLE AREA ***	35,000 SFMIN.	68,759 SF +/-	35,840 SF +	39,721 SF +/-	42,362 SF +/-	44,407 SF +/-	48,737 SF +/-	45,669 SF +/-	58,315 SF +/-	41,856 SF +/-	40,075 SF +/-	40,510 SF +/-	43,680 SF+/-	58,055 SF+/-

* REQUIRED LOT AREA BASED ON LOT DEPTH §220-25B

** LAND EXCLUDING AREAS WITH LESS THAN 1/3 THE REQUIRED LOT WIDTH

*** LAND EXCLUDING STEEP SLOPES (>15%), WETLANDS PER §220-10E(2)(a) OF THE AMENDED ZONING CODE

NOTE 1: IN ORDER TO PRESERVE EXISTING STONE WALLS AND MINIMIZE INCURSION WITHIN WETLAND BUFFERS, VARIANCE FROM LOT SHAPE AND DIMENSIONAL REQUIREMENTS OF THE R-1A DISTRICT IS SOUGHT FROM THE LEWISBORO TOWN BOARD

DATE: 05-09-05

REVISION	
06-16-11	Conservation Plan
09-01-12	Review / Response
11-10-14	Review / Response
2-17-15	Review / Response
7-20-15	Review / Response
12-10-15	Review / Response
3-16-16	Review / Response
10-26-16	New Road
11-14-16	Revision

ENGINEERING CONSULTANT:
BIBBO ASSOCIATES, L.L.P.
CONSULTING ENGINEERS AND PLANNERS
MILL POND OFFICES
270 KISCO AVENUE, SUITE 203
SOMERS, NEW YORK
TEL (914) 277-5905

TIMOTHY S. ALLEN, P.E.

ENVIRONMENTAL CONSULTANT:
EVANS ASSOCIATES
ENVIRONMENTAL CONSULTING, INC.
205 Amity Road
Bethany, Connecticut 06524
T. (203) 393-0990
F. (203) 393-0196

DWG. TITLE: ZONING CONFORMANCE

PROJECT NAME: SILVERMINE PRESERVE
SILVERMINE DRIVE & LOCKWOOD ROAD
TOWN OF LEWISBORO, NEW YORK

Dwn. by:
Checked by:
Doc. ID:
EAEC Proj. No.: 809
DWG. NO.:

ZON

SHEET 3 OF 12

P:\Projects\MOSS-SILVERLine\Moss - Silvermine Subdivision 11-7-16.dwg, ZONING, 11/14/2016 11:10:40 AM, Nitsawormale, 1:1

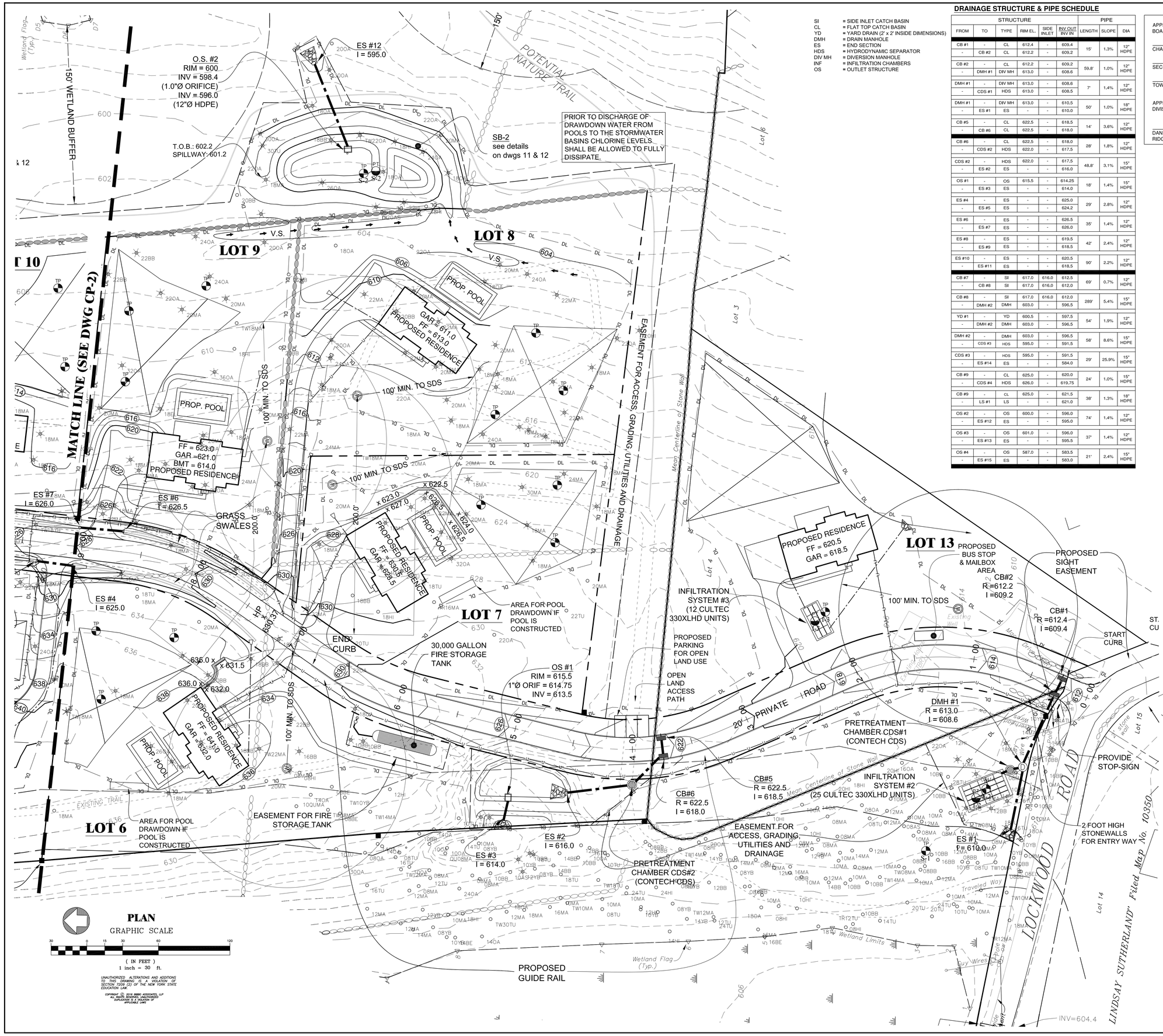

SI	= SIDE INLET CATCH BASIN
CL	= FLAT TOP CATCH BASIN
YD	= YARD DRAIN (2' x 2' INSIDE DIMENSIONS)
DMH	= DRAIN MANHOLE
ES	= END SECTION
HDS	= HYDRODYNAMIC SEPARATOR
DIV MH	= DIVERSION MANHOLE
INF	= INFILTRATION CHAMBERS
OS	= OUTLET STRUCTURE

DRAINAGE STRUCTURE & PIPE SCHEDULE

STRUCTURE						PIPE		
FROM	TO	TYPE	RIM EL.	SIDE INLET	INV OUT INV IN	LENGTH	SLOPE	DIA
CB #1	-	CL	612.4	-	609.4	15'	1.3%	12" HDPE
-	CB #2	CL	612.2	-	609.2			
CB #2	-	CL	612.2	-	609.2	59.8'	1.0%	12" HDPE
-	DMH #1	DIV MH	613.0	-	608.6			
DMH #1	-	DIV MH	613.0	-	608.6	7'	1.4%	12" HDPE
-	CDS #1	HDS	613.0	-	608.5			
DMH #1	-	DIV MH	613.0	-	610.5	50'	1.0%	18" HDPE
-	ES #1	ES	-	-	610.0			
CB #5	-	CL	622.5	-	618.5	14'	3.6%	12" HDPE
-	CB #6	CL	622.5	-	618.0			
CB #6	-	CL	622.5	-	618.0	28'	1.8%	12" HDPE
-	CDS #2	HDS	622.0	-	617.5			
CDS #2	-	HDS	622.0	-	617.5	48.8'	3.1%	15" HDPE
-	ES #2	ES	-	-	616.0			
OS #1	-	OS	615.5	-	614.25	18'	1.4%	15" HDPE
-	ES #3	ES	-	-	614.0			
ES #4	-	ES	-	-	625.0	29'	2.8%	12" HDPE
-	ES #5	ES	-	-	624.2			
ES #6	-	ES	-	-	626.5	35'	1.4%	12" HDPE
-	ES #7	ES	-	-	626.0			
ES #8	-	ES	-	-	619.5	42'	2.4%	12" HDPE
-	ES #9	ES	-	-	618.5			
ES #10	-	ES	-	-	620.5	90'	2.2%	12" HDPE
-	ES #11	ES	-	-	618.5			
CB #7	-	SI	617.0	616.0	612.5	69'	0.7%	12" HDPE
-	CB #8	SI	617.0	616.0	612.0			
CB #8	-	SI	617.0	616.0	612.0	289'	5.4%	15" HDPE
-	DMH #2	DMH	603.0	-	596.5			
YD #1	-	YD	600.5	-	597.5	54'	1.9%	12" HDPE
-	DMH #2	DMH	603.0	-	596.5			
DMH #2	-	DMH	603.0	-	596.5	58'	8.6%	15" HDPE
-	CDS #3	HDS	595.0	-	591.5			
CDS #3	-	HDS	595.0	-	591.5	29'	25.9%	15" HDPE
-	ES #14	ES	-	-	584.0			
CB #9	-	CL	625.0	-	620.0	24'	1.0%	15" HDPE
-	CDS #4	HDS	626.0	-	619.75			
CB #9	-	CL	625.0	-	621.5	38'	1.3%	18" HDPE
-	LS #1	LS	-	-	621.0			
OS #2	-	OS	600.0	-	596.0	74'	1.4%	12" HDPE
-	ES #12	ES	-	-	595.0			
OS #3	-	OS	601.0	-	596.0	37'	1.4%	12" HDPE
-	ES #13	ES	-	-	595.5			
OS #4	-	OS	587.0	-	583.5	21'	2.4%	15" HDPE
-	ES #15	ES	-	-	583.0			

APPROVED BY RESOLUTION OF THE LEWISBORO TOWN PLANNING BOARD.

CHAIRMAN DATE

SECRETARY DATE

TOWN ENGINEER DATE

APPROVED FOR FILING IN THE WESTCHESTER COUNTY CLERK'S OFFICE, DIVISION OF LAND RECORDS

DANIEL HIGGINS, OWNER DATE
RIDGEVIEW DESIGNER BUILDERS, INC.

DATE: 05-09-05

REVISIONS:

06-16-11	Conservation Plan
09-15-11	Review / Response
10-31-11	DEC Review:
09-01-12	Review / Response
11-10-14	Review / Response
2-17-15	Review / Response
7-20-15	Review / Response
12-10-15	Review / Response
3-16-16	Review / Response
10-26-16	New Road
11-14-16	Revision

SITE LEGEND

- EXISTING 2' CONTOUR
- EXISTING 10' CONTOUR
- 150' WETLAND SETBACK
- 100' STATE WETLAND ADJACENT AREA
- WETLAND BOUNDARY (STATE AND LOCAL) (FLAGGED BY TIM MILLER ASSOCIATES) RECONFIRMED BY EVANS ASSOCIATES, 2010
- EXISTING STONE WALL TO REMAIN
- EXISTING STONE WALL AS PROPOSED LOT LINE
- EXISTING STONE WALL TO BE REMOVED (WHERE FEASIBLE, RELOCATE WALL TO A NEW LOT LINE)
- PROPOSED WALL
- ANY WALLS GREATER THAN FOUR FEET IN HEIGHT SHALL BE DESIGNED BY A NEW YORK STATE PROFESSIONAL ENGINEER PRIOR TO ISSUANCE OF BUILDING PERMIT.
- EXISTING TREE TO BE PROTECTED
- EXISTING TREE TO BE REMOVED
- LIMIT OF DISTURBANCE TOTAL ESTIMATED DISTURBANCE = 13.9 Ac ±
- DRAINAGE, UTILITY AND ACCESS EASEMENT
- GUIDE RAIL
- VEGETATED SWALE
- PROPOSED ROOF & FOOTINGS DRAIN
- PROPOSED CATCH BASIN & DRAINAGE PIPING
- PROPOSED STORMWATER BASIN (SEE PLAN)
- PROPOSED 2' CONTOUR
- PROPOSED 10' CONTOUR
- PROP. PROPERTY LINE
- PROPOSED DWELLING AND DRIVEWAY
- PROPOSED S. D. S.
- PROPOSED WELL WITH WELL SETBACK
- PERCOLATION TEST HOLE
- DEEP TEST HOLE
- PROPOSED UNDERGROUND UTILITY LINES

ENGINEERING CONSULTANT:
BIBBO ASSOCIATES, LLP.
CONSULTING ENGINEERS AND PLANNERS
MILL POND OFFICES
283 ROUTE 100, SUITE 203
SOMERS, NEW YORK
TEL (914) 277-5805
TIMOTHY S. ALLEN, P.E.

ENVIRONMENTAL CONSULTANT:
EVANS ASSOCIATES
ENVIRONMENTAL CONSULTING, INC.
205 Amity Road
Bethany, Connecticut 06524
T. (203) 393-0690
F. (203) 393-0196

DWG. TITLE:
CONSTRUCTION PLAN I
with 3-way stop Intersection

PROJECT NAME:
SILVERMINE PRESERVE
SILVERMINE DRIVE & LOCKWOOD ROAD
TOWN OF LEWISBORO, NEW YORK

Dwn. by:
Checked by:
Doc. ID:
EAEC Proj. No.: 809
DWG. NO.:

CP-1
SHEET 4 OF 12

PLAN
GRAPHIC SCALE
30 0 15 30 60 120
(IN FEET)
1 inch = 30 ft.

UNAUTHORIZED ALTERATIONS AND ADDITIONS TO THIS DRAWING IS A VIOLATION OF SECTION 7209 (2) OF THE NEW YORK STATE EDUCATION LAW.

COPYRIGHT © 2016 BIBBO ASSOCIATES, LLP
ALL RIGHTS RESERVED. UNAUTHORIZED DUPLICATION IS A VIOLATION OF APPLICABLE LAWS

P:\Projects\MOSS-SILVER\dwg\Moss - Silvermine Subdivision 11-7-15.dwg, CONSTRUCTION PLAN (I), 30 scale, 11/24/2016 11:32:19 AM, hehaverstraw, 1:1

DRAINAGE STRUCTURE & PIPE SCHEDULE

STRUCTURE						PIPE		
FROM	TO	TYPE	RIM EL.	SIDE INLET	INV OUT INV IN	LENGTH	SLOPE	DIA
CB #1	-	CL	612.4	-	609.4	15'	1.3%	12" HDPE
-	CB #2	CL	612.2	-	609.2			
CB #2	-	CL	612.2	-	609.2	59.8'	1.0%	12" HDPE
-	DMH #1	DIV MH	613.0	-	608.6			
DMH #1	-	DIV MH	613.0	-	608.6	7'	1.4%	12" HDPE
-	CDS #1	HDS	613.0	-	608.5			
DMH #1	-	DIV MH	613.0	-	610.5	50'	1.0%	18" HDPE
-	ES #1	ES	-	-	610.0			
CB #5	-	CL	622.5	-	618.5	14'	3.6%	12" HDPE
-	CB #6	CL	622.5	-	618.0			
CB #6	-	CL	622.5	-	618.0	28'	1.8%	12" HDPE
-	CDS #2	HDS	622.0	-	617.5			
CDS #2	-	HDS	622.0	-	617.5	48.8'	3.1%	15" HDPE
-	ES #2	ES	-	-	616.0			
OS #1	-	OS	615.5	-	614.25	18'	1.4%	15" HDPE
-	ES #3	ES	-	-	614.0			
ES #4	-	ES	-	-	625.0	29'	2.8%	12" HDPE
-	ES #5	ES	-	-	624.2			
ES #6	-	ES	-	-	626.5	35'	1.4%	12" HDPE
-	ES #7	ES	-	-	626.0			
ES #8	-	ES	-	-	619.5	42'	2.4%	12" HDPE
-	ES #9	ES	-	-	618.5			
ES #10	-	ES	-	-	620.5	90'	2.2%	12" HDPE
-	ES #11	ES	-	-	618.5			
CB #7	-	SI	617.0	616.0	612.5	69'	0.7%	12" HDPE
-	CB #8	SI	617.0	616.0	612.0			
CB #8	-	SI	617.0	616.0	612.0	289'	5.4%	15" HDPE
-	DMH #2	DMH	603.0	-	596.5			
YD #1	-	YD	600.5	-	597.5	54'	1.9%	12" HDPE
-	DMH #2	DMH	603.0	-	596.5			
DMH #2	-	DMH	603.0	-	596.5	58'	8.6%	15" HDPE
-	CDS #3	HDS	595.0	-	591.5			
CDS #3	-	HDS	595.0	-	591.5	29'	25.9%	15" HDPE
-	ES #14	ES	-	-	584.0			
CB #9	-	CL	625.0	-	620.0	24'	1.0%	15" HDPE
-	CDS #4	HDS	626.0	-	619.75			
CB #9	-	CL	625.0	-	621.5	38'	1.3%	18" HDPE
-	LS #1	LS	-	-	621.0			
OS #2	-	OS	600.0	-	596.0	74'	1.4%	12" HDPE
-	ES #12	ES	-	-	595.0			
OS #3	-	OS	601.0	-	596.0	37'	1.4%	12" HDPE
-	ES #13	ES	-	-	595.5			
OS #4	-	OS	587.0	-	583.5	21'	2.4%	15" HDPE
-	ES #15	ES	-	-	583.0			

SI = SIDE INLET CATCH BASIN
CL = FLAT TOP CATCH BASIN
YD = YARD DRAIN (2' x 2' INSIDE DIMENSIONS)
DMH = DRAIN MANHOLE
ES = END SECTION
HDS = HYDRODYNAMIC SEPARATOR
DIV MH = DIVERSION MANHOLE
INF = INFILTRATION CHAMBERS
OS = OUTLET STRUCTURE

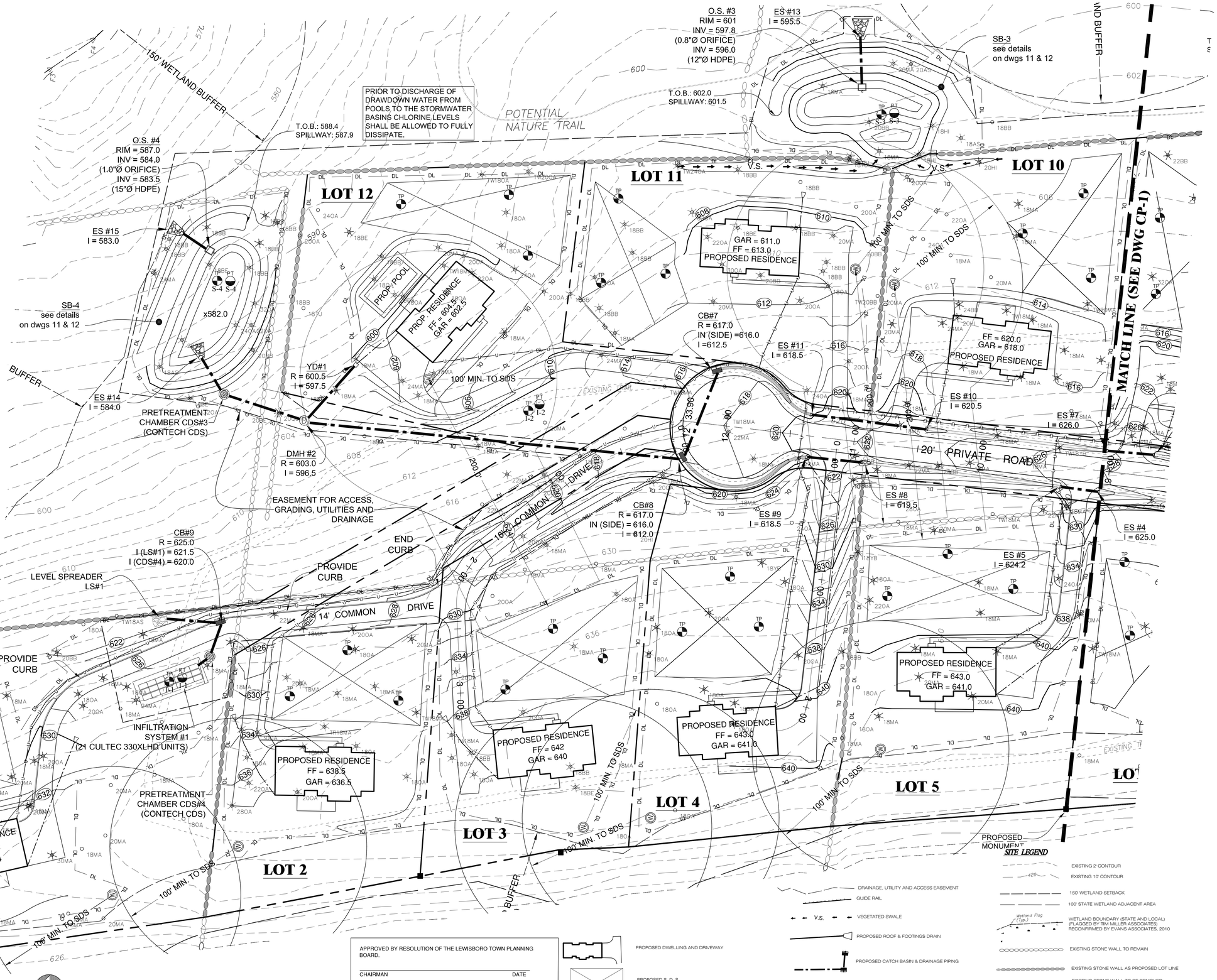

PLAN
GRAPHIC SCALE
30 0 15 30 60 120
(IN FEET)
1 inch = 30 ft.

UNAUTHORIZED ALTERATIONS AND ADDITIONS TO THIS DRAWING IS A VIOLATION OF SECTION 7209 (2) OF THE NEW YORK STATE EDUCATION LAW.

COPYRIGHT © 2016 BIBBO ASSOCIATES, LLP
ALL RIGHTS RESERVED. UNAUTHORIZED DUPLICATION IS A VIOLATION OF APPLICABLE LAWS

APPROVED BY RESOLUTION OF THE LEWISBORO TOWN PLANNING BOARD.

CHAIRMAN DATE

SECRETARY DATE

TOWN ENGINEER DATE

APPROVED FOR FILING IN THE WESTCHESTER COUNTY CLERK'S OFFICE, DIVISION OF LAND RECORDS

DANIEL HIGGINS, OWNER DATE
RIDGEVIEW DESIGNER BUILDERS, INC.

PROPOSED DWELLING AND DRIVEWAY
PROPOSED S. D. S.
PROPOSED WELL WITH WELL SETBACK
PT PERCOLATION TEST HOLE
TP DEEP TEST HOLE
100' MIN

SITE LEGEND

EXISTING 2' CONTOUR
EXISTING 10' CONTOUR
150' WETLAND SETBACK
100' STATE WETLAND ADJACENT AREA
WETLAND BOUNDARY (STATE AND LOCAL) (FLAGGED BY TIM MILLER ASSOCIATES) RECONFIRMED BY EVANS ASSOCIATES, 2010
EXISTING STONE WALL TO REMAIN
EXISTING STONE WALL AS PROPOSED LOT LINE
EXISTING STONE WALL TO BE REMOVED (WHERE FEASIBLE, RELOCATE WALL TO A NEW LOT LINE)
PROPOSED WALL
ANY WALLS GREATER THAN FOUR FEET IN HEIGHT SHALL BE DESIGNED BY A NEW YORK STATE PROFESSIONAL ENGINEER PRIOR TO ISSUANCE OF BUILDING PERMIT
EXISTING TREE TO BE PROTECTED
EXISTING TREE TO BE REMOVED
LIMIT OF DISTURBANCE
TOTAL ESTIMATED DISTURBANCE = 13.9 Ac ±
DRAINAGE, UTILITY AND ACCESS EASEMENT
GUIDE RAIL
V.S. VEGETATED SWALE
PROPOSED ROOF & FOOTINGS DRAIN
PROPOSED CATCH BASIN & DRAINAGE PIPING
PROPOSED STORMWATER BASIN (SEE PLAN)
PROPOSED 2' CONTOUR
PROPOSED 10' CONTOUR
PROP. PROPERTY LINE
PROPOSED UNDERGROUND UTILITY LINES

DATE: 05-09-05

REVISIONS:

06-16-11	Conservation Plan
09-15-11	Review / Response
10-31-11	DEC Review:
09-01-12	Review / Response
11-10-14	Review / Response
2-17-15	Review / Response
7-20-15	Review / Response
12-10-15	Review / Response
3-16-16	Review / Response
10-26-16	New Road
11-14-16	Revision

ENGINEERING CONSULTANT:
BIBBO ASSOCIATES, L.L.P.
CONSULTING ENGINEERS AND PLANNERS
MILL POND OFFICES
50 ROUTE 100, SUITE 203
SOMERS, NEW YORK
TEL (914) 277-5905
TIMOTHY S. ALLEN, P.E.

ENVIRONMENTAL CONSULTANT:
EVANS ASSOCIATES
ENVIRONMENTAL CONSULTING, INC.
25 Old Farm Road
Bethany, Connecticut 06524
T. (203) 393-0690
F. (203) 393-0196

DWG. TITLE:
CONSTRUCTION PLAN II
with 3-way stop intersection

PROJECT NAME:
SILVERMINE PRESERVE
SILVERMINE DRIVE & LOCKWOOD ROAD
TOWN OF LEWISBORO, NEW YORK

Dwn. by:
Checked by:
Doc. ID:
EAEC Proj. No.: 809
DWG. NO.:

CP-2
SHEET 5 OF 12

P:\Projects\MOSS-SILVER\dwg\Moss - Silvermine Subdivision 11-7-16.dwg, CONSTRUCTION PLAN (B) 30 scale, 11/14/2016 11:32:47 AM, Nitaworrmalk 1:1

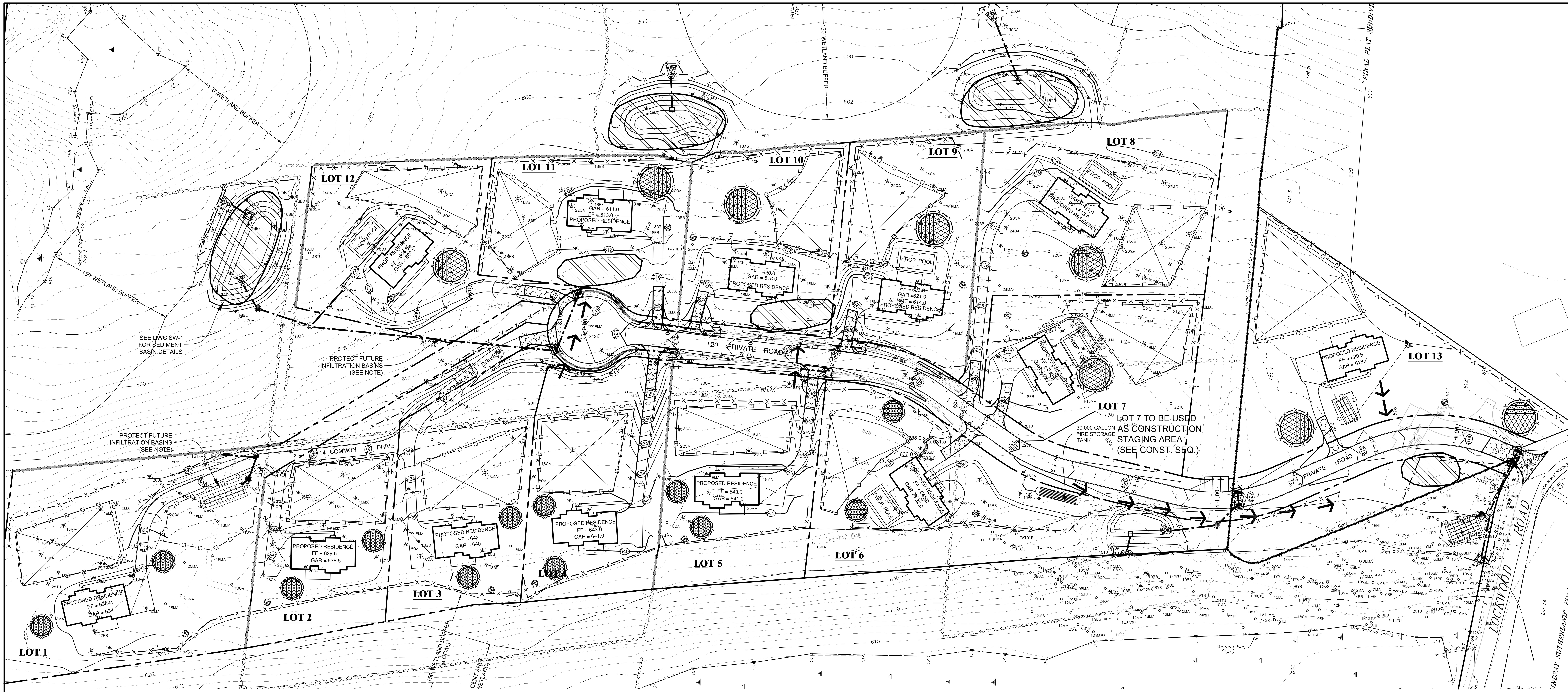

DATE:	05-09-05
REVISION	
06-16-11	Conservation Plan
09-01-12	Review / Response
11-10-14	Review / Response
2-17-15	Review / Response
7-20-15	Review / Response
12-10-15	Review / Response
3-16-16	Review / Response
10-26-16	New Road
11-14-16	Revision

GENERAL EROSION CONTROL PROGRAM

NOTE: THESE GUIDELINES ARE PROVIDED AS A GENERIC AID TO THE CONTRACTOR IN THE PROPER IMPLEMENTATION OF EROSION AND SEDIMENTATION CONTROLS. WHERE SITE-SPECIFIC MEASURES AND PROCEDURES HAVE BE ESTABLISHED (REFER TO "GENERALIZED CONSTRUCTION SEQUENCE" ON IPP-1 AND "SITE SPECIFIC EROSION CONTROLS AND SEQUENCING" ON EC-3) SUCH MEASURES AND PROCEDURES TAKE PRECEDENCE.

PURPOSE

ALL CONSTRUCTION ACTIVITIES INVOLVING THE REMOVAL OR DEPOSITION OF SOILS ARE TO BE PROVIDED WITH APPROPRIATE PROTECTIVE MEASURES TO INHIBIT EROSION AND TO CONTAIN SEDIMENT DEPOSITION WITHIN THE AREA UNDER DEVELOPMENT. THOSE METHODS DEEMED HIGHLY EFFECTIVE ARE DESCRIBED BELOW AND SHOWN ON THIS DRAWING.

REQUIRED PROCEDURES

1. PRIOR TO START OF SITE CONSTRUCTION: ALL CONSTRUCTION ENTRANCES TO SITE SHALL BE INSTALLED AND STABILIZED. ALL TEMPORARY SILTATION BASINS AND/OR OTHER APPROVED SEDIMENT CONTROL MEASURES SHALL BE IN PLACE WHERE MOST EFFECTIVE.

2. ALL TEMPORARY EROSION AND SEDIMENT CONTROLS SHALL REMAIN IN PLACE, MAINTAINED REGULARLY IN PROPER FUNCTIONING CONDITION, UNTIL ALL AREAS EXPOSED DURING SITE CONSTRUCTION HAVE BEEN SUITABLY STABILIZED WITH PAVEMENT, PERMANENT STRUCTURES AND/OR FINAL VEGETATION COVER.

CONSTRUCTION GUIDELINES

A. WHEREVER FEASIBLE, NATURAL VEGETATION SHALL BE RETAINED AND PROTECTED (BY FLAGGING OR OTHER EFFECTIVE MEANS).

B ONLY THE SMALLEST PRACTICAL AREA OF LAND SHALL BE EXPOSED AT ANY ONE TIME DURING CONSTRUCTION.

C SITE CONSTRUCTION ACTIVITIES SHALL START WHENEVER POSSIBLE AT THE NEAREST POINT UPSTREAM OF THESE SILT TRAPS AND PROCEED TO ACTIVITIES FURTHER UPSTREAM.

D. WHEN LAND IS EXPOSED DURING DEVELOPMENT, THE PERIOD OF EXPOSURE SHALL BE KEPT TO A MINIMUM, INSTALLING PERMANENT AND FINAL VEGETATION, PAVING, STRUCTURES, ETC., AT THE EARLIEST POSSIBLE OPPORTUNITY.

E. CONSTRUCTION EQUIPMENT SHALL NOT UNNECESSARILY CROSS LIVE STREAMS EXCEPT BY MEANS OF BRIDGES, CULVERTS OR OTHER APPROVED MEANS.

F. SEDIMENT CONTROL MEASURES INSTALLED IN LIVE STREAMS SHOULD GENERALLY BE MADE OF STONE AND MUST BE SPECIFICALLY DESIGNED, TAKING INTO ACCOUNT THE SIZE OF DRAINAGE BASIN ANTICIPATED STREAM FLOWS AND STREAM VELOCITIES.

G. NO CONSTRUCTION ACTIVITIES WITHIN OR NEAR LIVE STREAMS (CREATION OF PONDS, REALIGNMENT OF STREAM CHANNELS, INSTALLATION OF LARGE CULVERTS, ETC.) SHALL BEGIN UNTIL APPROPRIATE MEASURES FOR TEMPORARILY DIVERTING STREAM FLOW PAST THE WORK SECTION AND REQUIRED DOWNSTREAM SEDIMENT CONTROLS ARE IN PLACE. IN GENERAL THESE SEDIMENT CONTROLS ARE TO BE REMOVED ONLY WHEN ALL CONSTRUCTION ACTIVITY UPSTREAM HAS BEEN SATISFACTORILY COMPLETED AND THE STREAM FLOWS CLEAR.

H. NOTES ON SITE STABILIZATION

1. ALL TOPSOIL TO BE STRIPPED FROM THE AREA BEING DEVELOPED, SHALL BE STOCKPILED NOT LESS THAN 50 FEET FROM ANY BODY OF SURFACE WATER AND SHALL BE IMMEDIATELY SEEDED WITH MANHATTAN RYE GRASS.

2. ON ALL EMBANKMENT FILL SLOPES, TOPSOIL SHALL BE STRIPPED AT LEAST FIVE (5) FEET WIDER THAN REQUIRED FOR THE EMBANKMENT TOE OF SLOPE. A PROTECTIVE BERM OF TOPSOIL SHALL BE LEFT IN THIS AREA, RUNNING PARALLEL TO THE CONTOURS FOR THE PURPOSE OF RESTRICTING DRAINAGE RUNOFF. THE TOPSOIL BERM SHALL BE SEEDED AS REQUIRED FOR STOCKPILES.

3. IN ADDITION TO THE ABOVE, FURTHER EROSION AND SILTATION CONTROL MEASURES INCLUDING, BUT NOT LIMITED TO SLIT TRENCH SILT TRAPS, STAKED HAYBALES OR BRUSH CHECKDAMS, SHALL ALSO BE EMPLOYED WHERE

4. ALL CUT SLOPES AND EMBANKMENTS FILLS ARE TO BE IMMEDIATELY LAID BACK AND STABILIZED AS FOLLOWS:

A. GRADED TO FINISHED SLOPES

B. SCARIFIED

C. TOPSOILED WITH NOT LESS THAN FOUR (4) INCHES OF SUITABLE TOPSOIL MATERIAL

D. SEEDED WITH FOLLOWING GRASS MIXTURE (BY WEIGHT) OR APPROVED EQUAL:

45 % KENTUCKY BLUE GRASS
45 % CREEPING RED FESCUE
10 % PERENNIAL RYE GRASS

SEED SHALL BE APPLIED AT THE RATE OF NOT LESS THAN TWO (2) POUNDS PER 1000 SQUARE FEET

E. MULCHED WITH NOT LESS THAN ONE (1) INCH AND NOT MORE THAN THREE (3) INCHES OF STRAW AT TWO (2) TONS/ACRE AND ANCHORED IN A SUITABLE MANNER. WHERE SLOPES EXCEED 1:3, SUITABLY ANCHORED NETTING SUCH AS TENEX N030 OR APPROVED EQUAL SHALL BE UTILIZED.

STORMWATER MAINTENANCE PROGRAM

RESPONSIBLE PARTIES

SHORT TERM / DURING CONSTRUCTION
D. HIGGINS, S. HAFT AND E. MOSS
dba SILVERMINE GROUP
45 BENDER WAY
POUND RIDGE, NEW YORK 10576

LONG TERM / AFTER CONSTRUCTION
INDIVIDUAL HOMEOWNERS T.B.D.
HOMEOWNERS ASSOCIATION
(MAINTENANCE OF STORMWATER FACILITIES)

SHORT TERM / CONSTRUCTION MAINTENANCE PROGRAM

1. REFERENCE IS HEREBY MADE TO DRAWINGS EC AND D-1 FOR EROSION CONTROL PROGRAM, NOTES AND DETAILS

2. ALL EROSION AND SEDIMENTATION CONTROL MEASURES SHALL BE INSPECTED ON A BI-WEEKLY BASIS AND/OR AFTER SIGNIFICANT RAINFALL EVENTS. THE FOLLOWING CHECKLIST SHALL BE USED AS A GUIDELINE FOR INSPECTION AND MAINTENANCE: :

A. ALL STAKED SILT FENCE SHALL BE INSPECTED AND EXCESS SEDIMENTATION REMOVED TO STOCKPILE AREAS. AREAS OF SIGNIFICANT SEDIMENT ENTRAPMENT SHALL BE BACKED-UP WITH A ROW OF STAKED HAYBALES.

B. ALL TEMPORARY SEDIMENT TRAPS, WATER BREAKS, DRAINAGE STRUCTURES AND DETENTION BASINS SHALL BE INSPECTED WEEKLY AND AFTER HEAVY RAINS AND EXCESS SEDIMENTATION REMOVED TO STOCKPILE AREAS. DETENTION BASINS SHALL BE CLEANED TO ORIGINAL DEPTH WHEN SEDIMENT HAS ACCUMULATED UP TO WITHIN 6" OF THE LOW LEVEL OUTLET IN ORDER TO INSURE PROPER HYDRAULIC FUNCTIONING. ALL OTHER DRAINAGE STRUCTURES SHALL BE CLEAN WHEN FILLED TO 1/2 OF INTENDED CAPACITY.

C. IMMEDIATELY PRIOR TO ISSUANCE OF THE FIRST CERTIFICATE OF OCCUPANCY, ALL DRAINAGE STRUCTURES AND FACILITIES SHALL BE BROUGHT TO THEIR PROPER FUNCTION AND USE AND CLEANED TO THE LINE AND GRADES SHOWN ON THESE DRAWINGS.

D. ALL ASPECTS OF THE ROADWAY AND DRAINAGE SYSTEM SHALL BE FULLY BONDED TO ENSURE PROPER COMPLIANCE WITH THE APPROVED PLANS.

LONG TERM/ROADS AND DRAINAGE MAINTENANCE

* : AS RECOMMENDED BY BIBBO ASSOCIATES, LLP. THE ULTIMATE MAINTENANCE AND MAINTENANCE SCHEDULE WILL BE THE RESPONSIBILITY OF THE HOMEOWNERS ASSOCIATION.

1. IT IS RECOMMENDED THAT ALL ASPECTS OF THE DRAINAGE AND ROADWAY SYSTEM BE INSPECTED AND MAINTAINED EVERY SIX MONTHS. INSPECTIONS AND MAINTENANCE SHOULD BE SCHEDULED FOLLOWING THE WINTER MONTHS (MARCH OR APRIL) AND DURING THE FALL (OCTOBER OR NOVEMBER).

2. THE INSPECTION AND MAINTENANCE OF THE FACILITIES SHOULD INCLUDE THE FOLLOWING:

A. INSPECT CATCH BASIN SUMPS AND GRATES; DETENTION SYSTEM CAPACITIES; VELOCITY DISSIPATOR INLETS/OUTLETS; AND ALL ROADWAYS FOR EXCESS SEDIMENT AND DEBRIS. ANY APPRECIABLE SEDIMENT WHICH ADVERSELY AFFECTS THE FUNCTION OF A GIVEN STRUCTURE SHOULD BE REMOVED TO AN APPROVED DISPOSAL AREA FOR POSSIBLE RECLAMATION. SAID INSPECTIONS AND PROPOSED MAINTENANCE WORK SHOULD BE MADE IN THE PRESENCE AND IN CONSULTATION WITH THE TOWN ENGINEER. ANY NOTED AREAS OF CHRONIC SEDIMENTATION OR EROSION SHALL BE BROUGHT TO THE ATTENTION OF THE TOWN ENGINEER AND DESIGN ENGINEER FOR A LONG TERM DESIGN SOLUTION.

B. DETENTION AREA PLANTINGS SHALL BE INSPECTED ON A YEARLY BASIS (DURING THE SPRING GROWING SEASON) IN THE PRESENCE OF THE TOWN ENGINEER. THE PLANT HEALTH AND MORTALITY RATE SHALL BE CLOSELY MONITORED AND PLANTING SHOULD BE REPLACED AND/OR SUPPLEMENTED AS NECESSARY.

PLAN

GRAPHIC SCALE

0 25 50 100 200

(IN FEET)
1 inch = 50 ft.

UNAUTHORIZED ALTERATIONS AND ADDITIONS TO THIS DRAWING IS A VIOLATION OF SECTION 7209 (2) OF THE NEW YORK STATE EDUCATION LAW.

COPYRIGHT © 2016 BIBBO ASSOCIATES, LLP ALL RIGHTS RESERVED. UNAUTHORIZED DUPLICATION IS A VIOLATION OF APPLICABLE LAWS

SITE LEGEND

- PROPOSED 2' CONTOUR
- PROPOSED 10' CONTOUR
- PROP. PROPERTY LINE
- PROPOSED DWELLING AND DRIVEWAY
- PROPOSED S. D. S.
- PROPOSED WELL
- EXISTING TREE TO BE PROTECTED
- EXISTING TREE TO BE REMOVED
- EXISTING 2' CONTOUR
- EXISTING 10' CONTOUR
- 150' WETLAND SETBACK
- 100' STATE WETLAND ADJACENT AREA
- WETLAND BOUNDARY (STATE AND LOCAL) (FLAGGED BY TIM MILLER ASSOCIATES) RECONFIRMED BY EVANS ASSOCIATES, 2010
- PROPOSED CATCH BASIN & DRAINAGE PIPING
- PROPOSED STORMWATER BASIN OR INFILTRATION BASIN (SEE PLAN)

EROSION CONTROL LEGEND

- STAKED SILT FENCE
- CONSTRUCTION ENTRANCE
- TOPSOIL STOCKPILE
- WATER BREAK (TEMPORARY DIVERSION)
- DRAIN INLET SEDIMENT FILTER
- TEMPORARY SILT TRAP / SEDIMENT BASINS
- ORANGE CONSTRUCTION FENCING

NOTE: AREAS DESIGNATED FOR SEWAGE TREATMENT AND STORMWATER INFILTRATION ARE TO BE PROTECTED FROM CONSTRUCTION TRAFFIC

APPROVED BY RESOLUTION OF THE LEWISBORO TOWN PLANNING BOARD.

CHAIRMAN DATE

SECRETARY DATE

TOWN ENGINEER DATE

APPROVED FOR FILING IN THE WESTCHESTER COUNTY CLERK'S OFFICE, DIVISION OF LAND RECORDS

DANIEL HIGGINS, OWNER DATE
RIDGEVIEW DESIGNER BUILDERS, INC.

ENGINEERING CONSULTANT:
BIBBO ASSOCIATES, L.L.P.
CONSULTING ENGINEERS AND PLANNERS
MILL POND OFFICES
293 ROUTE 100, SUITE 203
SOMERS, NEW YORK
TEL (914) 277-5805
TIMOTHY S. ALLEN, P.E.

ENVIRONMENTAL CONSULTANT:
EVANS ASSOCIATES
ENVIRONMENTAL CONSULTING, INC.
205 Amity Road
Bethany, Connecticut 06524
T. (203) 393-0690
F. (203) 393-0196

DWG. TITLE: EROSION CONTROL PLAN

PROJECT NAME: SILVERMINE PRESERVE
SILVERMINE DRIVE & LOCKWOOD ROAD
TOWN OF LEWISBORO, NEW YORK

Dwn. by:
Checked by:
Doc. ID:
EAEC Proj. No.: 809
DWG. NO.:

EC-1

SHEET 6 OF 12

P:\Projects\MOSS-SILVER\dwg\Moss - Silvermine Subdivision 11-7-16.dwg, E. C. PLAN, 11/14/2016 1:53:17 PM, NHawvermale, 1:1

CONSTRUCTION SEQUENCING

PHASE ONE (DISTURBANCE = 4.8 ACRES)
(CONSTRUCTION OF ROAD AND LOT 13)

1. PRIOR TO THE START OF CONSTRUCTION, A MEETING IN THE FIELD SHALL BE HELD WITH THE CONTRACTOR, ENGINEER AND TOWN CONSULTANTS TO DISCUSS THE PROCESS OF CONSTRUCTION.
2. CENTERLINE OF THE PROPOSED ROAD WITH OFFSETS TO BE STAKED OUT BY LICENSED SURVEYOR. CLEARING LIMITS ASSOCIATED WITH THE ROAD, ROAD GRADING, STORMWATER AREAS AND DRAINAGE FACILITIES AS WELL AS AREAS DESIGNATED FOR CONSTRUCTION STAGING (LOT 7) AND SILT TRAPS SHALL ALSO BE STAKED OUT.
3. INSTALL STABILIZED CONSTRUCTION ENTRANCE FOR NEW ROAD. INSTALL SILT FENCING WHERE SHOWN ON PLANS.
4. ALL TREES, EXCEPT AS OTHERWISE DESIGNATED, WITHIN THE CLEARING LIMITS SHALL BE REMOVED, INCLUDING STUMPS. NO ON-SITE BURIAL OF STUMPS SHALL BE PERMITTED.
5. PROVIDE ORANGE CONSTRUCTION FENCING AROUND FUTURE INFILTRATION AREAS AND SEWAGE TREATMENT AREAS (ON LOTS 6 AND 7) ADJACENT TO ROADWAY CONSTRUCTION IN ORDER TO RESTRICT CONSTRUCTION TRAFFIC WITHIN THESE AREAS.
6. ESTABLISH TEMPORARY SILT TRAPS AND SEDIMENT BASINS WHERE INDICATED ON PLANS. SB-2, SB-3, AND SB-4 SHALL BE USED AS TEMPORARY SEDIMENT BASINS DURING CONSTRUCTION HOWEVER, THE BASINS MUST NOT BE EXCAVATED TO THE FINAL BOTTOM ELEVATION. ONLY EXCAVATE TO THE TEMPORARY BOTTOM ELEVATION AS SHOWN ON SHEET "SW-1". VEGATATIVE SWALES LOCATED ON LOTS 8-11 SHOULD BE CONSTRUCTED IN CONJUCTION WITH SB-2 AND SB-3. (NOTE: THESE PRACTICES SHALL REMAIN IN PLACE AND BE MAINTAINED IN PROPER FUNCTION UNTIL ALL OF THE TRIBUTARY AREAS HAVE BEEN STABILIZED. IN ADDITION, INFILTRATION SYSTEMS SHALL BE KEPT OFF-LINE AND ALL CONSTRUCTION EQUIPMENT SHALL BE KEPT "OFF- LIMITS" UNTIL THEN.)

PHASE ONE (CONTINUED)

7. TOPSOIL FROM ALL AREAS TO BE DISTURBED SHALL BE STOCKPILED AS INDICATED ON THE EROSION CONTROL PLAN AND DETAILS.
8. ROADWAY AND EMBANKMENTS SHALL BE BROUGHT TO SUBGRADE. PROVIDE WATER BREAKS AS SHOWN ON EROSION CONTROL PLAN TO DIRECT SURFACE RUNOFF TO SILT TRAPS / SEDIMENT BASINS.
9. EXCESS SUBSOIL SHALL ALSO BE STOCKPILED AS APPROPRIATE. STABILIZE EMBANKMENTS WITH TOPSOIL, SEED AND MULCH WITHIN 7 DAYS OF EXPOSURE.
10. INSTALL ROADWAY DRAINAGE PIPING AND STRUCTURES AS SHOWN. PROVIDE INLET PROTECTION FOR STRUCTURES AS SHOWN ON EROSION CONTROL PLAN AND DETAILS. (NOTE: THE OUTLET OF CB #6 SHALL BE PLUGGED IN ORDER TO KEEP THE AREA DESIGNATED SB-1 BE KEPT OFF-LINE UNTIL THE TRIBUTARY AREA HAS BEEN STABILIZED. AT THAT TIME THE PLUG MAY BE REMOVED AS DIRECTED BY THE ENGINEER.)
11. INSTALL 30,000 GALLON FIRE STORAGE TANK, HYDRANT AND PIPING AS SHOWN ON PLAN AND DETAILS.
12. INSTALL ROADWAY BASE AND ASPHALT BINDER COURSES. INSTALL CURBING AS INDICATED ON BINDER. TOPSOIL, SEED AND MULCH BEHIND CURBING. INSTALL ROADSIDE GRASS SWALES WHERE INDICATED. INLET PROTECTION, WATER BREAKS AND SILT TRAPS SHALL BE REMOVED PRIOR.
13. ONCE SUITABLE VEGETATIVE COVER HAS BEEN ESTABLISHED, INFILTRATION BASINS (SB-2, SB-3, AND SB-4) SHALL BE INSTALLED AND INFILTRATION SYSTEM #2 SHALL BE COMPLETED IN ACCORDANCE WITH THE APPROVED PLANS AND DETAILS. IN ADDITION, THE VEGETATIVE SWALES SERVING SB-2 AND SB-3 SHALL BE INSTALLED AND STABILIZED.
14. INSTALL STABILIZED CONSTRUCTION ENTRANCE FOR DRIVEWAY. INSTALL SILT FENCING WHERE SHOWN ON PLANS.
15. ALL TREES, EXCEPT AS OTHERWISE DESIGNATED, WITHIN THE CLEARING LIMITS SHALL BE REMOVED, INCLUDING STUMPS. NO ON-SITE BURIAL OF STUMPS SHALL BE PERMITTED.
16. PROVIDE ORANGE CONSTRUCTION FENCING AROUND FUTURE INFILTRATION AREA (LOT 13) AND SEWAGE TREATMENT AREA.
17. TOPSOIL FROM ALL AREAS TO BE DISTURBED SHALL BE STOCKPILED AS INDICATED ON THE EROSION CONTROL PLANS.
18. COMMENCE SITE GRADING, INSTALLATION OF BUILDING FOUNDATION AND BRING DRIVEWAY TO SUBGRADE. INSTALL INFILTRATION SYSTEM #3 ON LOT #13 AS PER THE PLANS AND DETAILS. <u>DO NOT BRING INFILTRATION SYSTEM "ON-LINE" AT THIS TIME.</u>
19. INSTALL SEWAGE TREATMENT SYSTEM AS APPROVED BY THE WESTCHESTER COUNTY DEPARTMENT OF HEALTH.
20. COMPLETE CONSTRUCTION OF DWELLING. COMPLETE INSTALLATION OF DRIVEWAY PAVEMENT. STABILIZED WITH TOPSOIL, SEED AND MULCH ALL AREAS DISTURBED DURING THE CONSTRUCTION PROCESS. ONCE ALL TRIBUTARY AREAS HAVE BEEN STABILIZED, BRING INFILTRATION SYSTEM #3 "ON-LINE".
21. REMAINING EROSION CONTROLS SHALL BE REMOVED ONLY AS DIRECTED BY TOWN CONSULTANTS.

PHASE TWO (DISTURBANCE = 4.7 ACRES)
(CONSTRUCTION OF LOTS 1-6)

1. LOCATION OF DRIVEWAY, PROPOSED DWELLING AND SEWAGE TREATMENT AREA, AS WELL AS LIMITS OF CONSTRUCTION, SHALL BE STAKED BY A LICENSED SURVEYOR.
2. PRIOR TO THE START OF CONSTRUCTION, A MEETING IN THE FIELD SHALL BE HELD WITH THE CONTRACTOR, ENGINEER AND BUILDING INSPECTOR TO DISCUSS THE PROCESS OF CONSTRUCTION.
3. INSTALL STABILIZED CONSTRUCTION ENTRANCE FOR DRIVEWAY. INSTALL SILT FENCING WHERE SHOWN ON PLANS.
4. ALL TREES, EXCEPT AS OTHERWISE DESIGNATED, WITHIN THE CLEARING LIMITS SHALL BE REMOVED, INCLUDING STUMPS. NO ON-SITE BURIAL OF STUMPS SHALL BE PERMITTED.
5. PROVIDE ORANGE CONSTRUCTION FENCING AROUND FUTURE INFILTRATION AREA (LOT 1) AND SEWAGE TREATMENT AREAS.
6. TOPSOIL FROM ALL AREAS TO BE DISTURBED SHALL BE STOCKPILED AS INDICATED ON THE EROSION CONTROL PLANS.
7. COMMENCE SITE GRADING, INSTALLATION OF BUILDING FOUNDATION AND BRING DRIVEWAY TO SUBGRADE. INSTALL INFILTRATION SYSTEM #1 ON LOT #1 AS PER THE PLANS AND DETAILS. <u>DO NOT BRING INFILTRATION SYSTEM "ON-LINE" AT THIS TIME.</u>
8. INSTALL SEWAGE TREATMENT SYSTEM AND INDIVIDUAL DRILLED WELL AS APPROVED BY THE WESTCHESTER COUNTY DEPARTMENT OF HEALTH.
9. COMPLETE CONSTRUCTION OF DWELLING. COMPLETE INSTALLATION OF DRIVEWAY PAVEMENT. STABILIZED WITH TOPSOIL, SEED AND MULCH ALL AREAS DISTURBED DURING THE CONSTRUCTION PROCESS. ONCE ALL TRIBUTARY AREAS HAVE BEEN STABILIZED, BRING INFILTRATION SYSTEM #1 "ON-LINE".
10. ONCE SUITABLE VEGETATIVE COVER HAS BEEN ESTABLISHED, REMAINING EROSION CONTROLS SHALL BE REMOVED AS DIRECTED BY TOWN CONSULTANTS.

PHASE THREE (DISTURBANCE = 4.8 ACRES)
(CONSTRUCTION OF LOTS 7-12)

1. LOCATION OF DRIVEWAY, PROPOSED DWELLING AND SEWAGE TREATMENT AREA, AS WELL AS LIMITS OF CONSTRUCTION, SHALL BE STAKED BY A LICENSED SURVEYOR.
2. PRIOR TO THE START OF CONSTRUCTION, A MEETING IN THE FIELD SHALL BE HELD WITH THE CONTRACTOR, ENGINEER AND BUILDING INSPECTOR TO DISCUSS THE PROCESS OF CONSTRUCTION.
3. INSTALL STABILIZED CONSTRUCTION ENTRANCE FOR DRIVEWAY. INSTALL SILT FENCING WHERE SHOWN ON PLANS.
4. ALL TREES, EXCEPT AS OTHERWISE DESIGNATED, WITHIN THE CLEARING LIMITS SHALL BE REMOVED, INCLUDING STUMPS. NO ON-SITE BURIAL OF STUMPS SHALL BE PERMITTED.
5. PROVIDE ORANGE CONSTRUCTION FENCING AROUND AND SEWAGE TREATMENT AREAS..
6. TOPSOIL FROM ALL AREAS TO BE DISTURBED SHALL BE STOCKPILED AS INDICATED ON THE EROSION CONTROL PLANS. .
7. COMMENCE SITE GRADING, INSTALLATION OF BUILDING FOUNDATION AND BRING DRIVEWAY TO SUBGRADE.
8. INSTALL SEWAGE TREATMENT SYSTEM AND INDIVIDUAL DRILLED WELL AS APPROVED BY THE WESTCHESTER COUNTY DEPARTMENT OF HEALTH.
9. COMPLETE CONSTRUCTION OF DWELLING. COMPLETE INSTALLATION OF DRIVEWAY PAVEMENT. STABILIZE WITH TOPSOIL, SEED AND MULCH ALL AREAS DISTURBED DURING THE CONSTRUCTION PROCESS. ONCE LOTS 7, 8, AND 9 HAVE BEEN DEVELOPED AND STABILIZED, CONVERT SB-2 INTO AN INFILTRATION BASIN AS PER THE PLANS AND DETAILS. ONCE LOTS 10 AND 11 HAVE BEEN DEVELOPED AND STABILIZED, CONVERT SB-3 INTO AN INFILTRATION BASIN AS PER THE PLANS AND DETAILS.
10. INSTALL TOP COURSE OF ASPHALT AS DIRECTED THROUGHOUT THE PRIVATE ROAD.
11. ONCE SUITABLE VEGETATIVE COVER HAS BEEN ESTABLISHED, REMAINING EROSION CONTROLS SHALL BE REMOVED AS DIRECTED BY TOWN CONSULTANTS.

APPROVED BY RESOLUTION OF THE LEWISBORO TOWN PLANNING BOARD.

CHAIRMAN DATE

SECRETARY DATE

TOWN ENGINEER DATE

APPROVED FOR FILING IN THE WESTCHESTER COUNTY CLERK'S OFFICE, DIVISION OF LAND RECORDS

DANIEL HIGGINS, OWNER DATE
RIDGEVIEW DESIGNER BUILDERS, INC.

DATE: 05-09-05

REVISION	
06-16-11	Conservation Plan
09-01-12	Review / Response
11-10-14	Review / Response
2-17-15	Review / Response
7-20-15	Review / Response
12-10-15	Review / Response
3-16-16	Review / Response
10-26-16	New Road
11-14-16	Revision

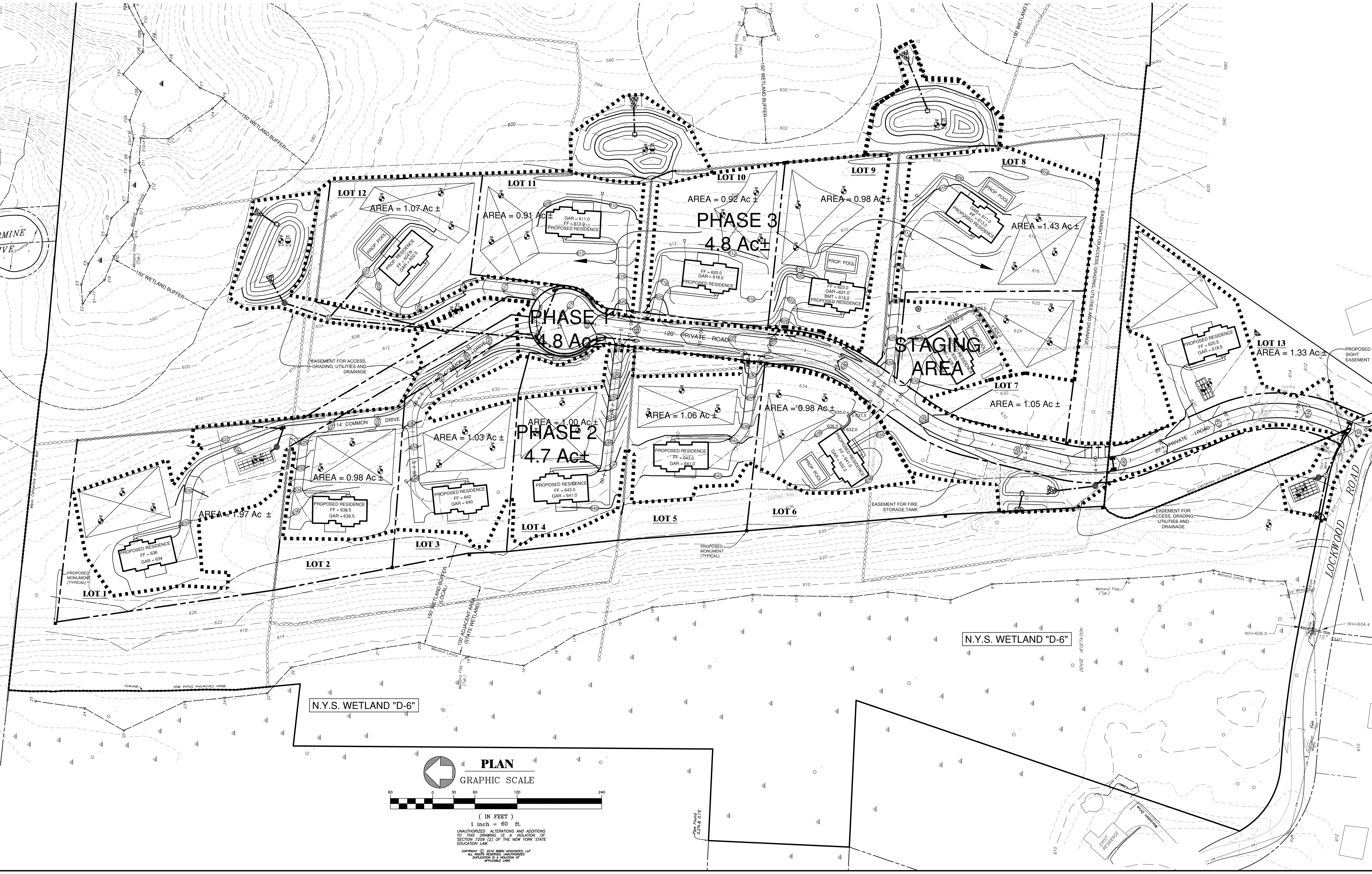

UNAUTHORIZED ALTERATIONS AND ADDITIONS TO THIS DRAWING IS A VIOLATION OF SECTION 7209 (2) OF THE NEW YORK STATE EDUCATION LAW.

COPYRIGHT © 2016 BIBBO ASSOCIATES, LLP ALL RIGHTS RESERVED. UNAUTHORIZED DUPLICATION IS A VIOLATION OF APPLICABLE LAWS

ENGINEERING CONSULTANT:
BIBBO ASSOCIATES, L.L.P.
CONSULTING ENGINEERS AND PLANNERS
MILL POND OFFICES
293 ROUTE 100, SUITE 203
SOMERS, NEW YORK
TEL (914) 277-5805
TIMOTHY S. ALLEN, P.E.

ENVIRONMENTAL CONSULTANT:
EVANS ASSOCIATES
ENVIRONMENTAL CONSULTING, INC.
205 Amity Road
Bethany, Connecticut 06524
T. (203) 393-0690
F. (203) 393-0196

DWG. TITLE: **PHASING PLAN**

PROJECT NAME: SILVERMINE PRESERVE
SILVERMINE DRIVE & LOCKWOOD ROAD
TOWN OF LEWISBORO, NEW YORK

Dwn. by:
Checked by:
Doc. ID:
EAEC Proj. No.: 809
DWG. NO.:

PH-1

SHEET 7 OF 12

P:\Projects\MOSS-SILVER\dwg\Moss - Silvermine Subdivision 11-7-16.dwg, PHASING PLAN, 11/14/2016 11:33:37 AM, NHawvermale, 1:1

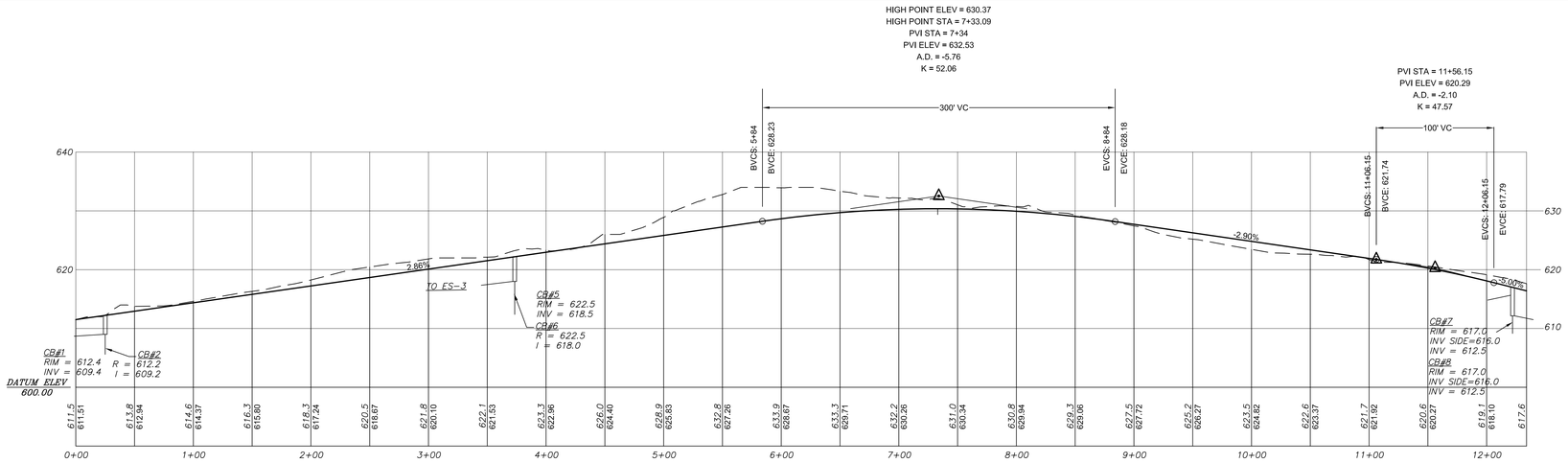

ROAD PROFILE

SCALE HORIZONTAL: 1" = 50'
VERTICAL: 1" = 10'

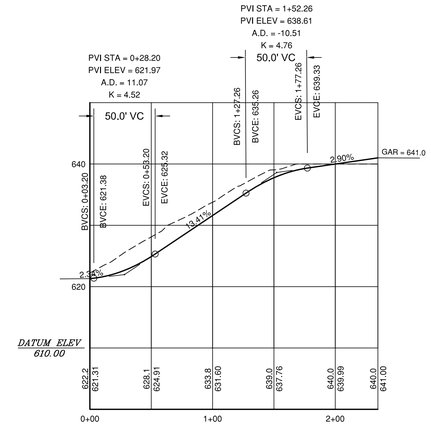

LOT 4 PROFILE

SCALE HORIZONTAL: 1" = 50'
VERTICAL: 1" = 10'

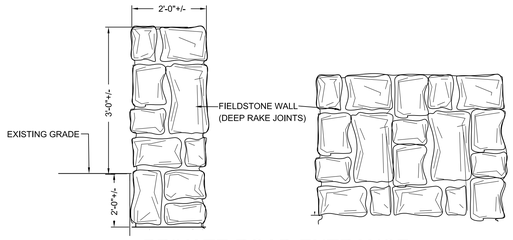

PRIVATE ROAD ENTRANCE LANDSCAPING WALL

N.T.S.

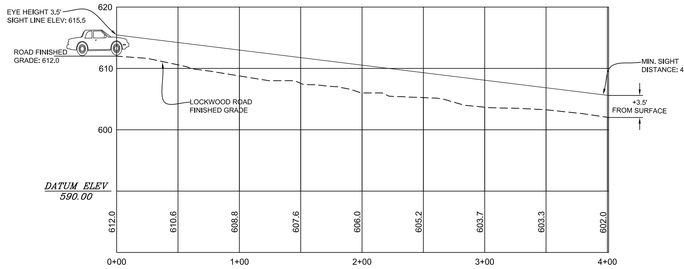

SIGHT DISTANCE PROFILE: LEFT (SOUTH EAST)

SCALE HORIZONTAL: 1" = 50'
VERTICAL: 1" = 10'

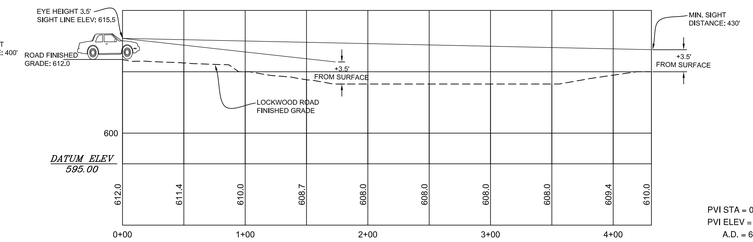

SIGHT DISTANCE PROFILE: RIGHT (WEST)

SCALE HORIZONTAL: 1" = 50'
VERTICAL: 1" = 10'

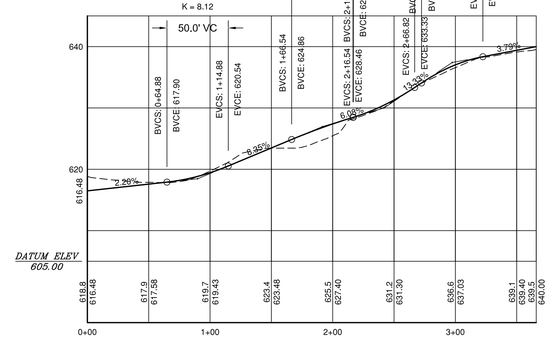

COMMON DRIVE TO LOT 3 PROFILE

SCALE HORIZONTAL: 1" = 50'
VERTICAL: 1" = 10'

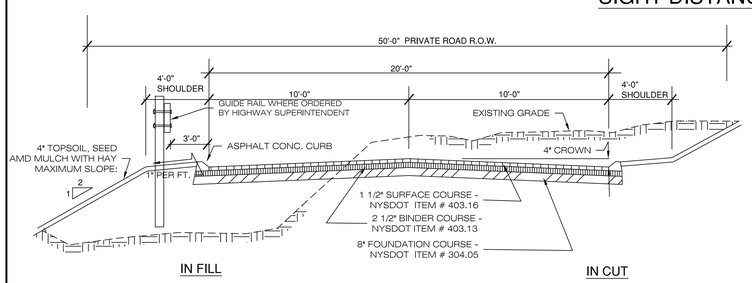

PRIVATE ROAD PAVEMENT SECTION "B"

CROWN WITH CURBING BOTH SIDES OF ROAD

N.T.S.

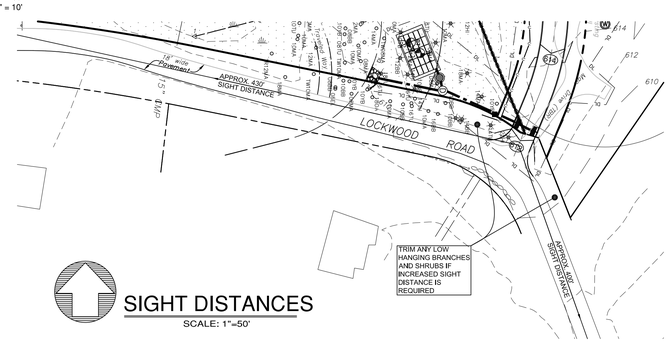

SIGHT DISTANCES

SCALE: 1"=50'

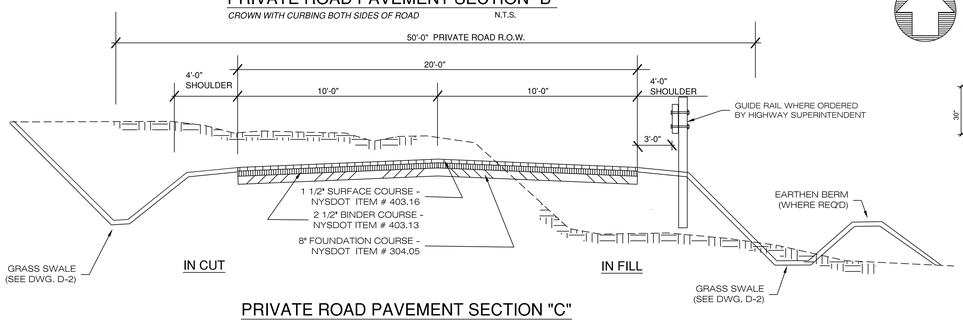

PRIVATE ROAD PAVEMENT SECTION "C"

CROWN WITH SWALES ON BOTH SIDES
(NO CURB)

N.T.S.

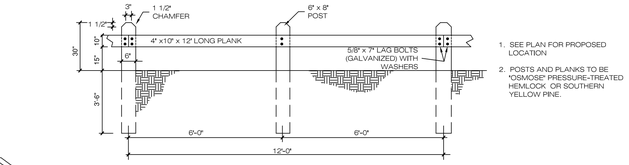

1. SEE PLAN FOR PROPOSED LOCATION
2. POSTS AND PLANKS TO BE "OSMOSE" PRESSURE-TREATED HEMLOCK OR SOUTHERN YELLOW PINE.

TIMBER GUIDE RAIL

N.T.S.

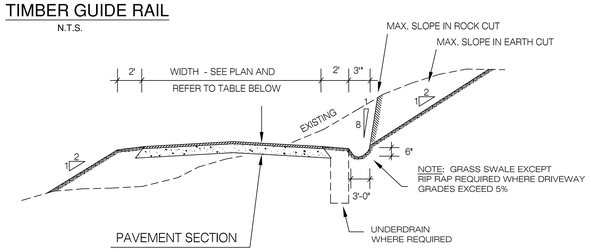

NO . OF LOTS SERVED	WIDTH	PAVING SECTION
1	12'	2" TOP, 6" R.O.B.
2	14'	1 1/2" TOP, 2 1/2" BINDER, 6" R.O.B.
3	16'	1 1/2" TOP, 2 1/2" BINDER, 6" R.O.B.

DRIVEWAY SECTION DETAIL

NOTE: DRIVEWAY MAY BE CROSS-PITCHED. REFER TO CONSTRUCTION PLANS FOR GRADING AND DRAINAGE

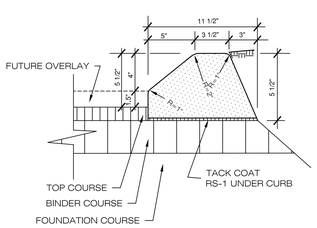

ASPHALT CURB DETAIL

N.T.S.

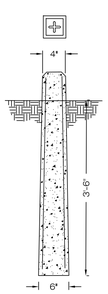

PROPOSED MONUMENT

N.T.S.

APPROVED BY RESOLUTION OF THE LEWISBORO TOWN PLANNING BOARD.

CHAIRMAN DATE

SECRETARY DATE

TOWN ENGINEER DATE

APPROVED FOR FILING IN THE WESTCHESTER COUNTY CLERK'S OFFICE, DIVISION OF LAND RECORDS

DANIEL HIGGINS, OWNER DATE
RIDGEVIEW DESIGNER BUILDERS, INC.

PAVEMENT NOTES:

1. ALL ITEMS MUST CONFORM TO N.Y.DS.D.O.T. SPECIFICATIONS.
2. MAIN ROAD STA. START / MAIN ROAD STA. END / APPLY SECTION

MAIN ROAD STA. START	MAIN ROAD STA. END	APPLY SECTION
0-23	6+78	"B"
6+78	END	"C"

UNAUTHORIZED ALTERATIONS AND ADDITIONS TO THIS DRAWING IS A VIOLATION OF SECTION 7209 (2) OF THE NEW YORK STATE EDUCATION LAW.

COPYRIGHT © 2016 BIBBO ASSOCIATES, LLP
ALL RIGHTS RESERVED. UNAUTHORIZED DUPLICATION IS A VIOLATION OF APPLICABLE LAWS

DATE: 05-09-05

REVISION

06-16-11	Conservation Plan
09-01-12	Review / Response
11-10-14	Review / Response
2-17-15	Review / Response
7-20-15	Review / Response
12-10-15	Review / Response
3-16-16	Review / Response
10-26-16	New Road
11-14-16	Revision

ENGINEERING CONSULTANT:
BIBBO ASSOCIATES, LLP.
CONSULTING ENGINEERS AND PLANNERS
MILL POND OFFICES
293 ROUTE 100, SUITE 203
SOMERS, NEW YORK
TEL (914) 277-5805

TIMOTHY S. ALLEN, P.E.

ENVIRONMENTAL CONSULTANT:
EVANS ASSOCIATES
ENVIRONMENTAL CONSULTING, INC.
205 Amity Road
Bethany, Connecticut 06524
T. (203) 393-0690
F. (203) 393-0196

DWG. TITLE: **PROFILES AND DETAILS**

PROJECT NAME: SILVERMINE PRESERVE
SILVERMINE DRIVE & LOCKWOOD ROAD
TOWN OF LEWISBORO, NEW YORK

Dwn. by:
Checked by:
Doc. ID:
EAEC Proj. No.: 809
DWG. NO.:

RP-1
SHEET 8 OF 12

P:\Projects\MOSS-SILVER\dwg\Moss - Silvermine Subdivision 11-7-16.dwg, PROFILES AND DETAILS, 11/14/2016 11:34:06 AM, Nehavermale, 1:1

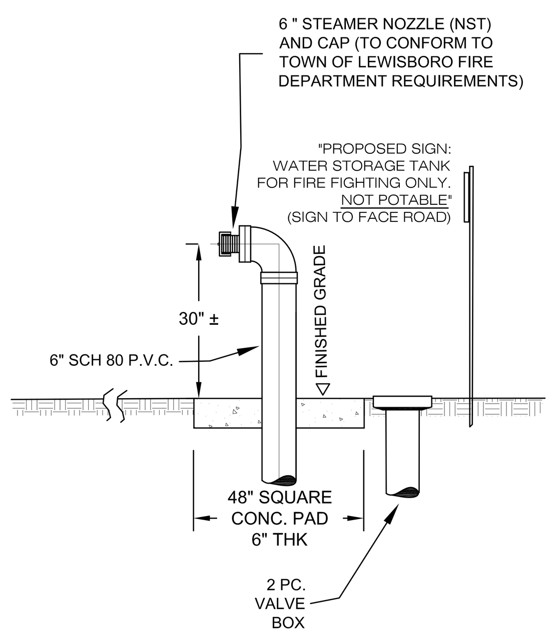

POST HYDRANT DETAIL
NO SCALE

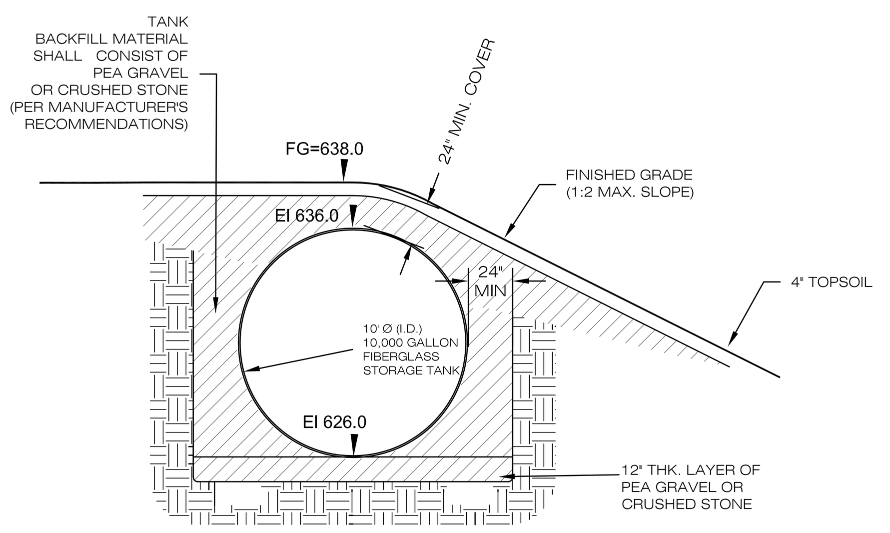

WATER STORAGE TANK INSTALLATION
CROSS SECTION TAKEN AT CENTERLINE OF TANK
NTS

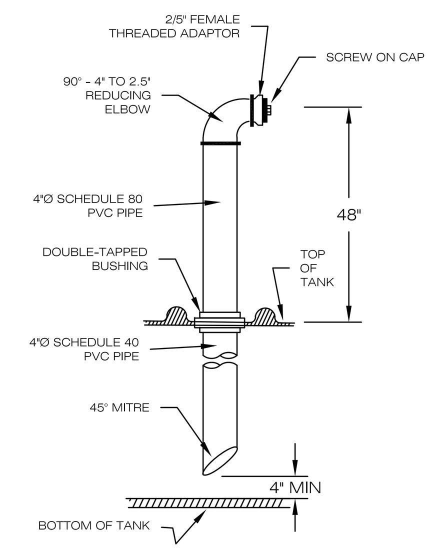

TANK FILL DETAIL
NO SCALE

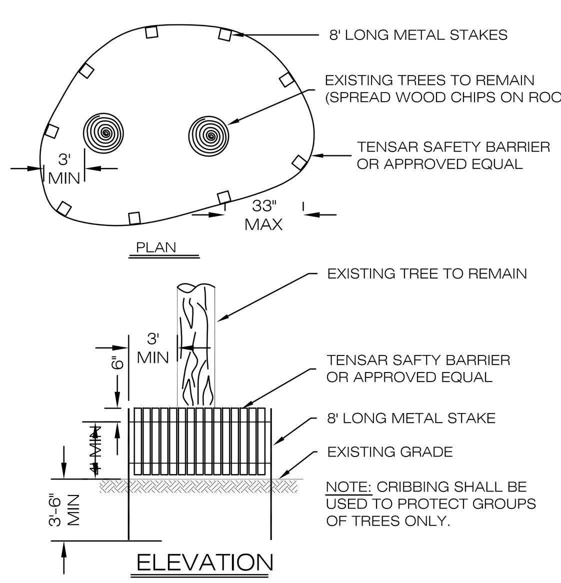

CRIBBING- EXISTING TREE PROTECTION
N.T.S.

TREE PROTECTION SHALL BE INSTALLED PRIOR TO ANY CONSTRUCTION ACTIVITY.

APPROVED BY RESOLUTION OF THE LEWISBORO TOWN PLANNING BOARD.

CHAIRMAN	DATE
SECRETARY	DATE
TOWN ENGINEER	DATE

APPROVED FOR FILING IN THE WESTCHESTER COUNTY CLERK'S OFFICE, DIVISION OF LAND RECORDS

DANIEL HIGGINS, OWNER — DATE
RIDGEVIEW DESIGNER BUILDERS, INC.

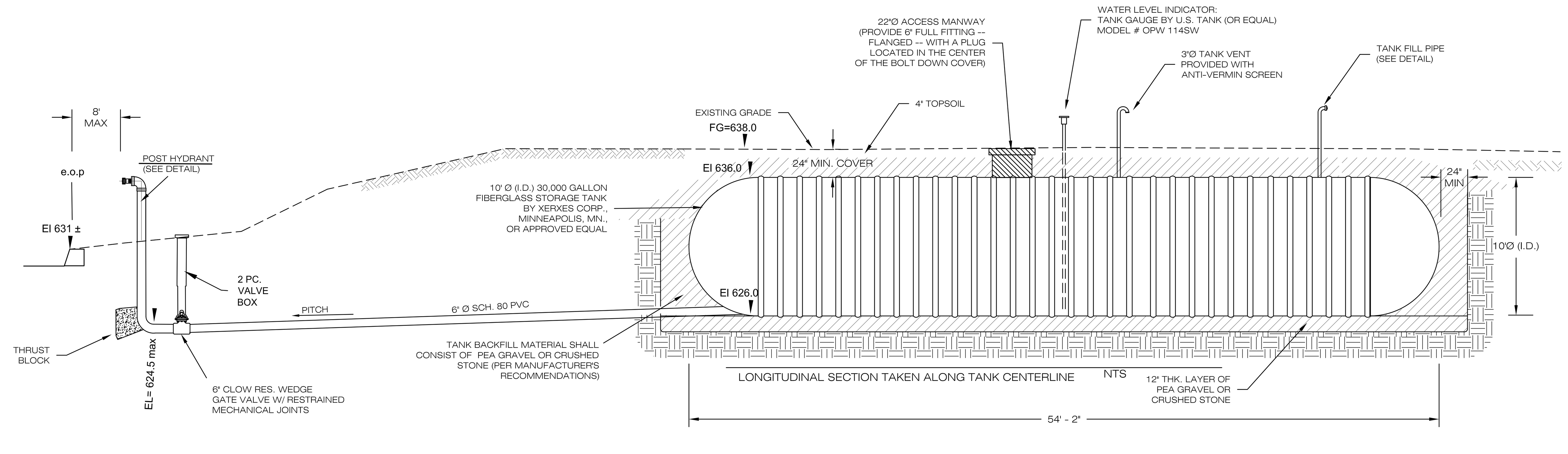

WATER STORAGE TANK INSTALLATION
LONGITUDINAL SECTION ALONG TANK TO HYDRANT
NTS

30,000 GALLON WATER STORAGE TANK INSTALLATION
SEE CONSTRUCTION PLAN FOR LOCATION AND GRADING
NTS

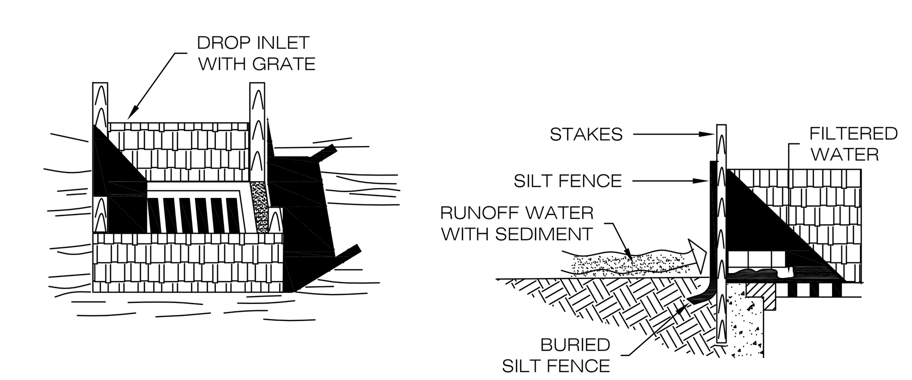

SPECIFIC APPLICATION

THIS METHOD OF INLET PROTECTION IS APPLCABLE WHERE THE INLET DRAINS A RELATIVELY FLAT AREA (SLOPES NO GREATER THAN 5 % WHERE SHEET OR OVERLAND FLOWS (NOT EXCEEDING 0.5 c.f.s.) ARE TYPICAL. WHERE SLOPES OF FLOWS ARE GREATER OR WHERE CONCENTRATED FLOWS ARE ANTICIPATED, USE HORIZONTAL BRACES ACROSS STAKES AND SURROUND SILT FENCE WITH CRUSHED STONE.

DRAIN INLET SEDIMENT FILTER
N.T.S.

MAINTENANCE: DRAIN INLET SEDIMENT FILTERS SHALL BE INSPECTED AFTER MAJOR RAIN EVENTS TO INSURE PROPER FUNCTIONING. REPAIR OR REPLACE AS NECESSARY UNTIL DIRECTED TO BE REMOVED.

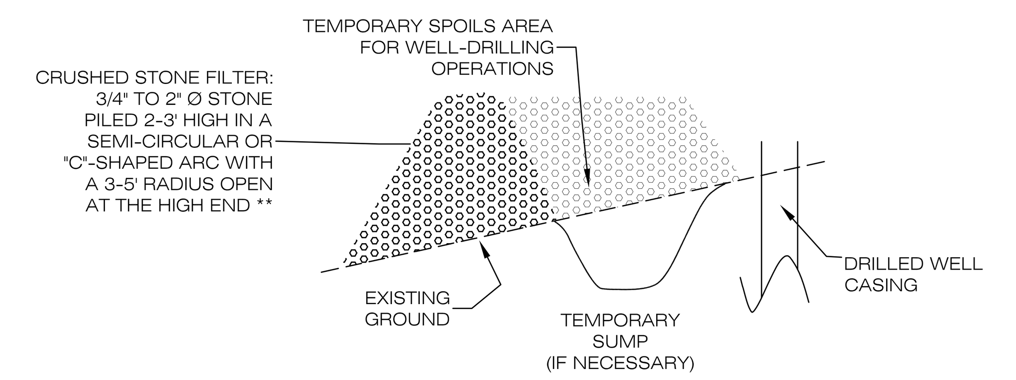

CRUSHED STONE FILTER DAM
N.T.S.

** IF FILTER DAM IS TO BE USED TO PROVIDE TEMPORARY PROTECTION FOR OUTLET STRUCTURES OF S.T.B.'s, STONE SHALL BE PLACED IN A "U" SHAPE AT LEAST 3 TO 5' FROM OUTLET STRUCTURE AND SHALL EXTEND TO THE BASIN EMBANKMENT.

MAINTENANCE:

WHERE THIS PRACTICE IS USED AS TEMPORARY PROTECTION FOR S.T.B. OUTLETS: MONTHLY INSPECTIONS SHALL BE MADE TO INSURE PROPER FUNCTIONING. SEDIMENT BUILD-UP SHALL BE REMOVED WHEN LEVEL REACHES 1/3 HEIGHT OF DAM. EVALUATE FILTER DAMS AND REPLACE, IF NECESSARY.

WHERE THIS PRACTICE IS USED DURING INSTALLATION OF DRILLED WELL, THIS PRACTICE MAY BE REMOVED ONCE THE DRILLING OPERATION HAS BEEN COMPLETED. ALL COLLECTED SPOILS SHALL BE REMOVED TO APPROPRIATE TEMPORARY STOCKPILE AREA.

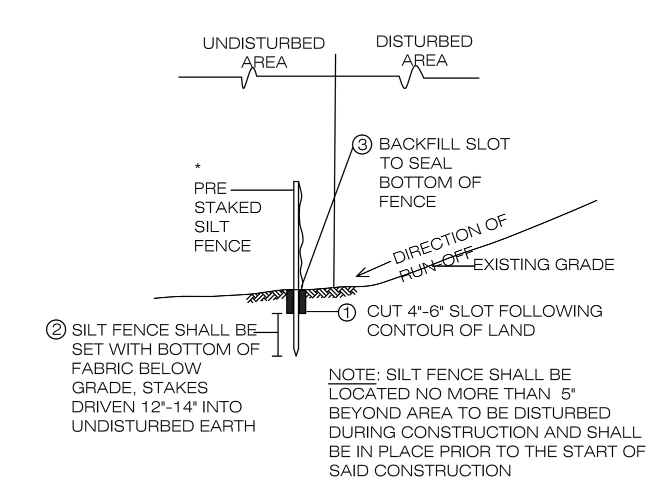

TYPICAL SILT FENCE INSTALLATION
N.T.S.

* USE "KONTROL FENCE " AS MANUFACTURED BY NKOLON (OR APPROVED EQUAL)

MAINTENANCE: SILT FENCE SHALL BE INSPECTED AT REGULAR INTERVALS (MONTHLY) AND AFTER MAJOR RAIN EVENTS TO INSURE PROPER FUNCTIONING. REMOVE ACCUMULATED SEDIMENT WHEN LEVEL REACHES 1/3 HEIGHT OF FENCE. REPAIR OR REPLACE AS NECESSARY UNTIL DIRECTED TO BE REMOVED.

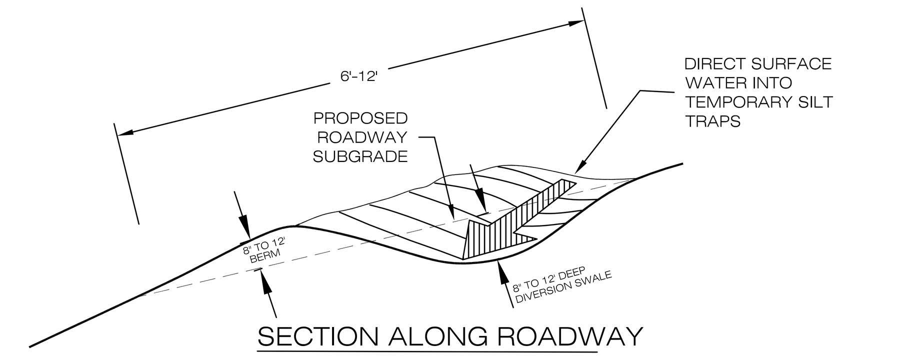

WATER BREAK
N.T.S.

MAINTENANCE: WATER BREAKS SHALL BE INSPECTED AT REGULAR INTERVALS (MONTHLY) AND AFTER MAJOR RAIN EVENTS TO INSURE PROPER FUNCTIONING. REPAIR AS NECESSARY UNTIL DIRECTED TO BE REMOVED.

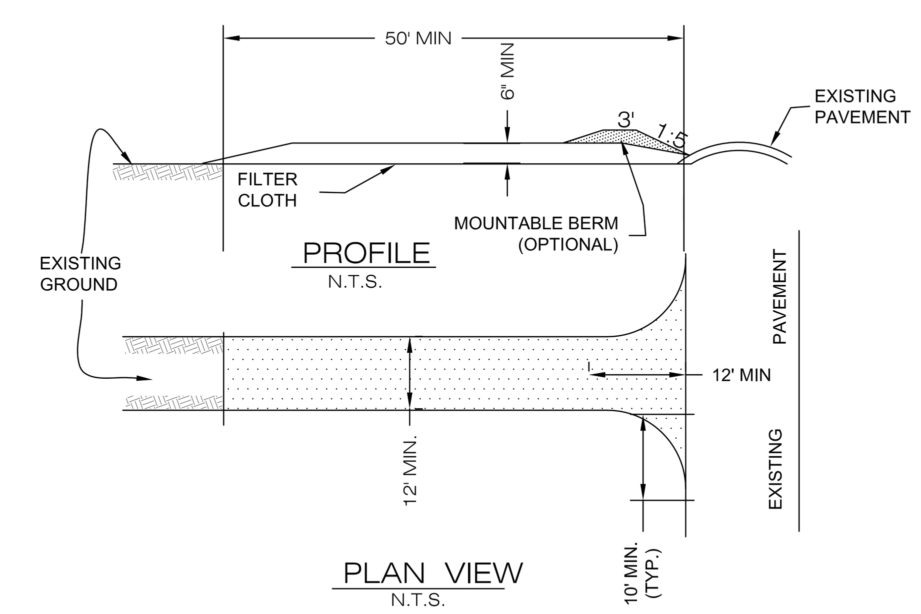

CONSTRUCTION SPECIFICATION

1 STONE SIZE- USE 2" STONE, OR RECYCLED CONCRETE EQUIVALENT.

2 LENGTH-NOT LESS THAN 50' (EXCEPT ON A SINGLE RESIDENCE LOT WHERE A 30 FOOT MINIMUM LENGHT WOULD APPLY.)

3 THICKNESS- NOT LESS THAN SIX (6) INCHES.

4 WIDTH- TWELVE (12) FOOT MINIMUM, BUT NOT LESS THAN THE FULL WIDTH AT POINTS WHERE INGRESS OR EGRESS OCCURS. TWENTY-FOUR (24) FOOT IF SINGLE ENTRANCE TO SITE.

5 FILTER CLOTH- WILL BE PLACED OVER THE ENTIRE AREA PRIOR TO PLACING OF STONE.

6 SURFACE WATER- ALL SURFACE WATER FLOWING OR DIVERTED TOWARD CONSTRUCTION ENTRACES SHALL BE PIPED ACROSS THE ENTRANCE. IF PIPING IS IMPRACTICAL, A MOUNTABLE BERM WITH 5:1 SLOPES WILL BE PERMITTED.

7 MAINTENANCE- THE ENTRANCE SHALL BE MAINTAINED IN A CONDITION WHICH WILL PREVENT TRACKING OR FLOWING OF SEDIMENT ONTO PUBLIC RIGHTS-OF-WAY. ALL SEDIMENT SPILLED, DROPPED, WASHED OR TRACTED ONTO PUBLIC RIGHTS-OF-WAY MUST BE REMOVED IMMEDIATELY.

8 WHEN WASHING IS REQUIRED, IT SHALL BE DONE ON AN AREA STABILIZED WITH STONE & WHICH DRAINS INTO AN APPROVED SEDIMENT TRAPPING DEVICE.

9 PERIODIC INSPECTION AND NEEDED MAINTENANCE SHALL BE PROVIDED AFTER EACH RAIN.

STABILIZED CONSTRUCTION ENTRANCE DETAIL
N.T.S.

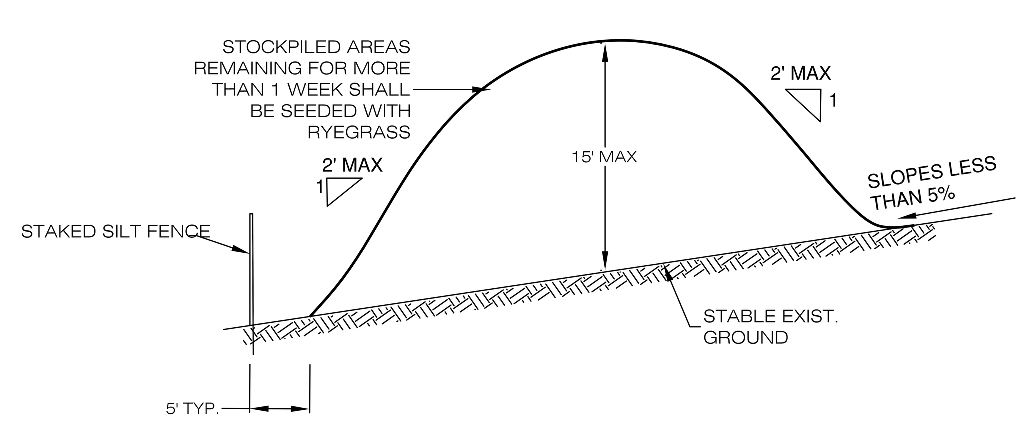

TYPICAL SOIL STOCKPILE DETAIL
N.T.S.

MAINTENANCE: STIL FENCING AROUND STOCKPILES SHALL BE INSPECTED AT REGULAR INTERVALS (MONTHLY) AND AFTER MAJOR RAIN EVENTS TO INSURE PROPER FUNCTIONING. REPAIR/REPLACE AS NECESSARY UNTIL DIRECTED TO BE REMOVED.

NOTE: MATERIAL REMOVED FROM SILT TRAP AREA SHALL BE DEPOSITED IN A TEMPORARY DEWATERING AREA (NEAR THE SILT TRAP AND SURROUNDED WITH SILT FENCING) UNTIL SUFFICIENTLY DRY. DRY DREDGED MATERIAL SHALL THEN BE MIXED WITH OTHER ON-SITE SOILS FOR APPROPRIATE ON-SITE USE.

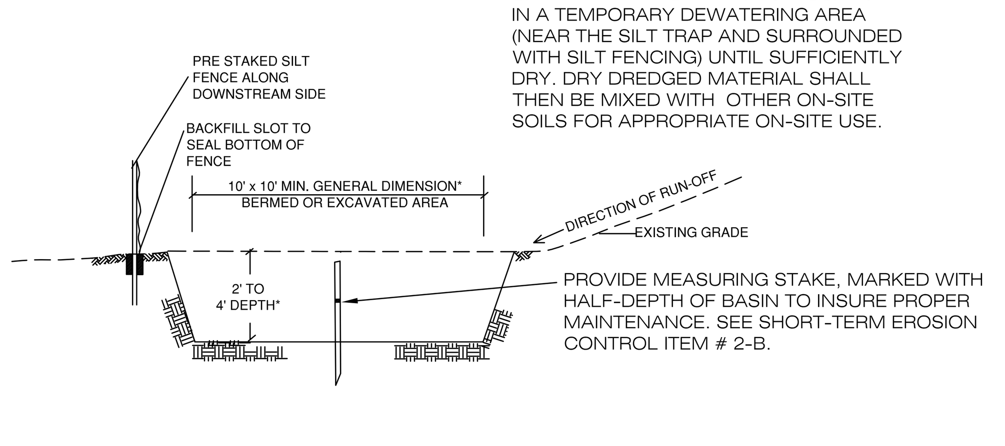

TEMPORARY SILT TRAP
N.T.S.

* NOTE: TEMPORARY SILT TRAP VOLUME SHALL BE 3600 CUBIC FEET PER ACRE OF DISTURBED AREA. ENGINEER SHALL MODIFY DIMENSIONS IN THE FIELD TO ACCOMODATE ANTICIPATED AREA OF DISTURBANCE. CLEAN OUT TRAP TO FULL DEPTH WHEN 1/3 FULL.

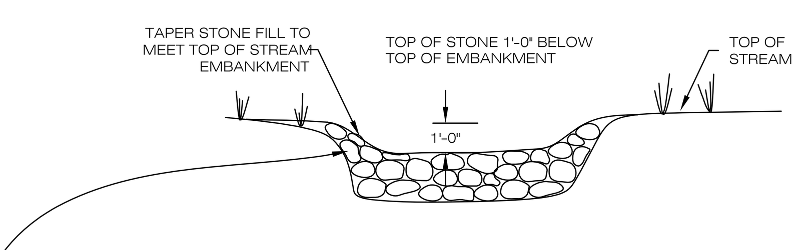

CHANNEL / STREAM X- SECTION AT CHECK DAM
N.T.S.

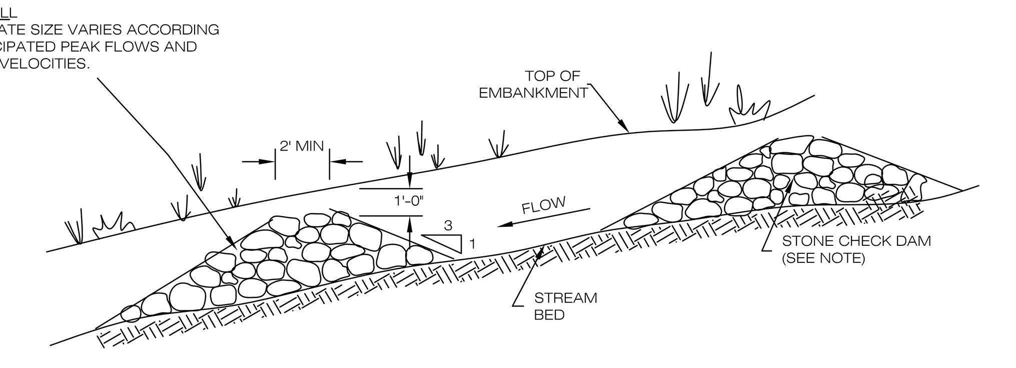

LONGITUDINAL SECTION ALONG STREAM AT CHECKDAM

NOTE
CHECK DAMS SHALL BE SPACED SUCH THAT THE BASE OF ONE SHALL BE ON A LEVEL WITH THE TOP OF THE NEXT ONE DOWN STREAM OF IT.

STONE CHECK-DAMS
N.T.S.

MAINTENANCE: DURING CONSTRUCTION, MONTHLY INSPECTIONS SHALL BE MADE TO INSURE PROPER FUNCTIONING.SEDIMENT BUILD-UP BEHIND CHECK DAMS SHALL BEREMOVED WHEN LEVEL REACHES HALF HEIGHT OF DAM. EVALUATE CHECK DAMS AND REPLACE, IF NECESSARY.

UNAUTHORIZED ALTERATIONS AND ADDITIONS TO THIS DRAWING IS A VIOLATION OF SECTION 7209 (2) OF THE NEW YORK STATE EDUCATION LAW.

COPYRIGHT © 2016 BIBBO ASSOCIATES, LLP ALL RIGHTS RESERVED, UNAUTHORIZED DUPLICATION IS A VIOLATION OF APPLICABLE LAWS

P:\Projects\MOSS-SILVER\dwg\Moss - Silvermine Subdivision 11-7-16.dwg, EC DETAILS, 11/14/2016 11:35:07 AM, NHawvermale, 1:1

DATE: 05-09-05

REVISION	
06-16-11	Conservation Plan
09-01-12	Review / Response
11-10-14	Review / Response
2-17-15	Review / Response
7-20-15	Review / Response
12-10-15	Review / Response
3-16-16	Review / Response
10-26-16	New Road
11-14-16	Revision

ENGINEERING CONSULTANT:
BIBBO ASSOCIATES, L.L.P.
CONSULTING ENGINEERS AND PLANNERS
MILL POND OFFICES
293 ROUTE 100, SUITE 203
SOMERS, NEW YORK
TEL (914) 277-5805

TIMOTHY S. ALLEN, P.E.

ENVIRONMENTAL CONSULTANT:
EVANS ASSOCIATES
ENVIRONMENTAL CONSULTING, INC.
205 Amity Road
Bethany, Connecticut 06524
T. (203) 393-0690
F. (203) 393-0196

DWG. TITLE: **MISCELLANEOUS DETAILS**

PROJECT NAME: SILVERMINE PRESERVE
SILVERMINE DRIVE & LOCKWOOD ROAD
TOWN OF LEWISBORO, NEW YORK

Dwn. by:	
Checked by:	
Doc. ID:	
EAEC Proj. No.:	809
DWG. NO.:	D-1

SHEET 9 OF 12

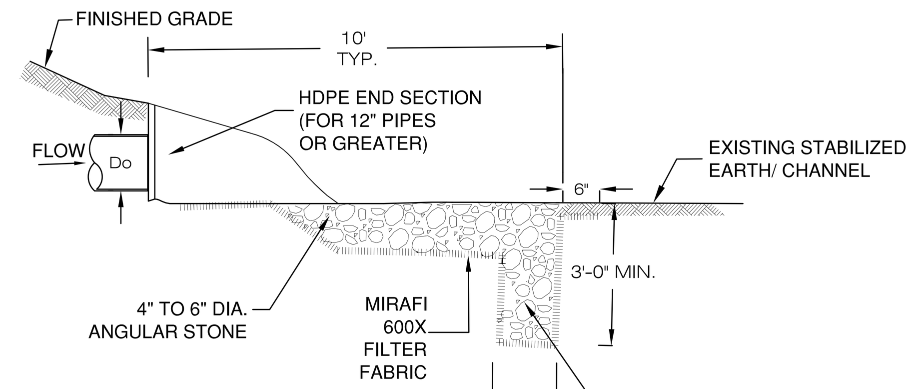

PROFILE VIEW

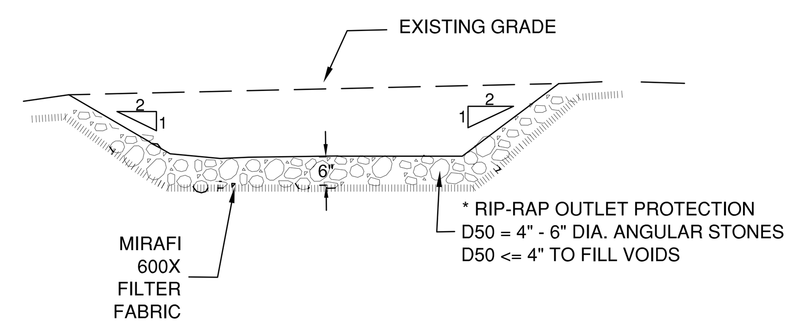

A-A SECTION

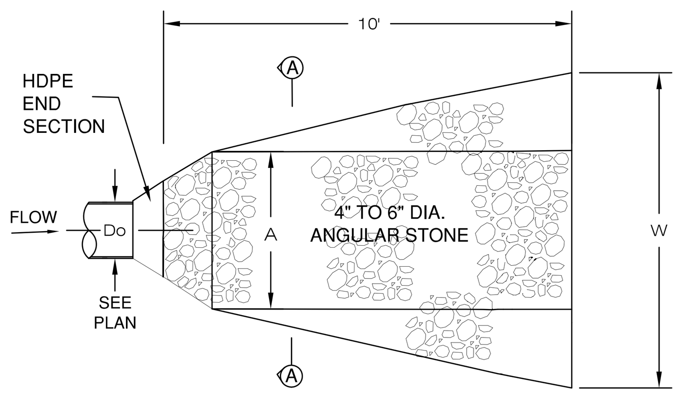

PLAN VIEW

(*) RIP RAP SIZE IS SPECIFIED IN THE TABLE
N.T.S.

STRUCTURE	PIPE DIA. (INCH)	PIPE LENGTH (LF)	PIPE SLOPE (%)	DISCHARGE Q (*) (CFS)	RIP RAP DIA. D_{50} (INCHES)	MIN. APRON LENGTH (FT) L	APRON WIDTH (FT) W	A
ES #1	18"	50	1.0	1.92	4	10 (**)	11.5	4.5
ES #2	15"	48.8	3.1	1.84	4	10 (**)	11	3
ES #3	15"	18	1.4	0.96	4	10 (**)	11	3
ES #12	12"	74	1.4	0.03	4	10 (**)	11	3
ES #13	12"	37	1.4	0.02	4	10 (**)	11	3
ES #14	15"	29	25.9	12.99	4	10 (**)	11	3
ES #15	15"	21	2.4	1.50	4	10 (**)	11.5	4.5

(*) BASED ON 25 YEAR STORM PEAK FLOWS.
DESIGN IS BASED ON "NYS STANDARDS & SPECIFICATIONS FOR EROSION AND SEDIMENT CONTROL. APRIL 2005
(**) MINIMUM DIMENSION OF 10 FT. USED

RIP-RAP OUTLET PROTECTION DETAIL
N.T.S.

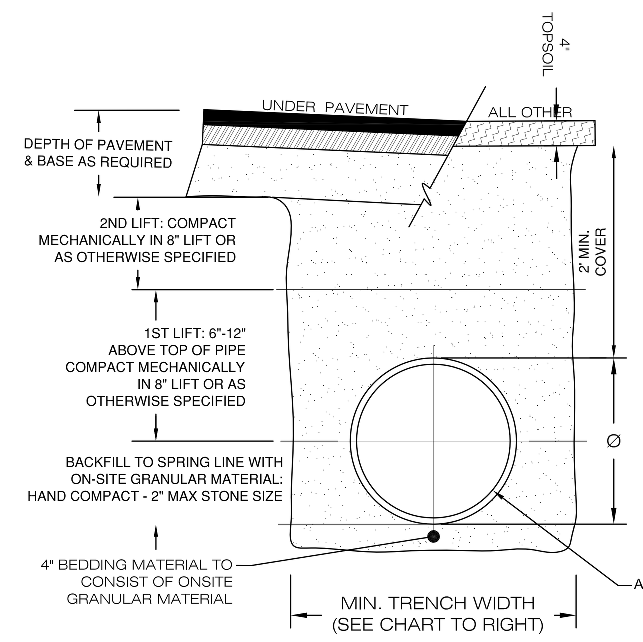

PIPE DIAMETER Ø	TRENCH WIDTH
4"	21"
6"	23"
8"	25"
12"	31"
15"	34"
18"	39"
24"	48"
30"	66"

ADDITIONAL NOTES:
1. ANY ADDITIONAL REQUIREMENTS AND SPECIFICATIONS SET FORTH BY THE PIPE MANUFACTURER MUST BE FOLLOWED FOR BACKFILLING
2. BACK FILL MATERIAL TO BE FREE OF FROST & STONES OVER 8" IN SIZE & COMPACTED AS REQUIRED

DRAINAGE PIPE INSTALLATION
N.T.S.

SYSTEM #3	SYSTEM #2	SYSTEM #1
ELEV = 613.0	ELEV = 612.0	ELEV = 626.0
ELEV = 612.0	ELEV = 611.7	ELEV = 623.0
ELEV = 611.1	ELEV = 611.2	ELEV = 622.2
ELEV = 608.5	ELEV = 608.5	ELEV = 619.5
ELEV = 608.0	ELEV = 608.0	ELEV = 619.0

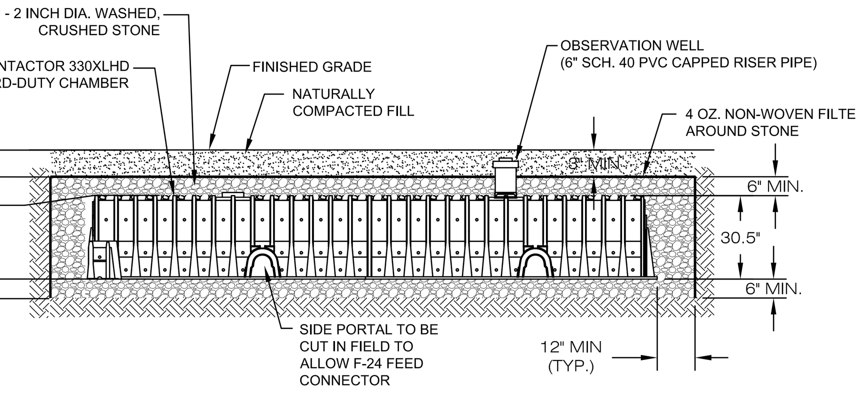

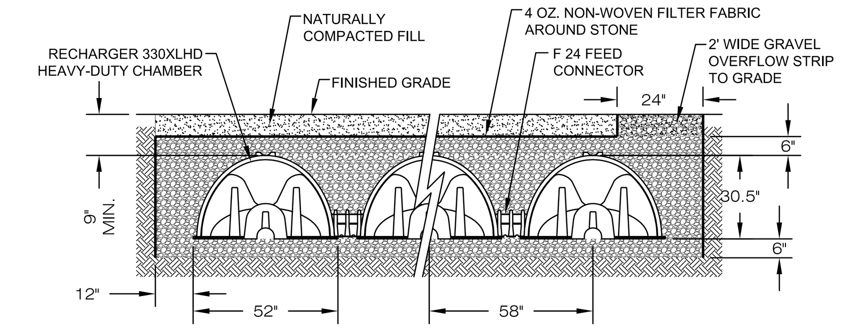

GENERAL NOTES
RECHARGER 330XLHD BY CULTEC, INC. OF BROOKFIELD, CT.
STORAGE PROVIDED = 11.32 CF/FT PER DESIGN UNIT.
INSTALLED LENGTH = 7 FEET
REFER TO CULTEC, INC.'S CURRENT RECOMMENDED INSTALLATION GUIDELINES.
USE RECHARGER 330XLHD HEAVY DUTY FOR TRAFFIC AND/OR H20 APPLICATIONS.

ALL RECHARGER 330XLHD HEAVY DUTY UNITS ARE MARKED WITH A COLOR STRIPE FORMED INTO THE PART ALONG THE LENGTH OF THE CHAMBER.
ALL RECHARGER 330XLHD CHAMBERS MUST BE INSTALLED IN ACCORDANCE WITH ALL APPLICABLE LOCAL, STATE AND FEDERAL REGULATIONS.

CULTEC RECHARGER 330XLHD
N.T.S.

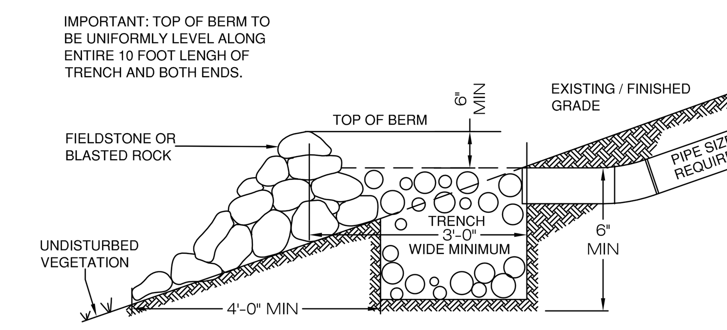

TRENCH SHALL REMAIN UNFILLED (SEE NOTE *) UNTIL COMPLETION OF PAVING AND SITE STABILIZATION WITH SUITABLE VEGETATIVE COVER. AS DIRECTED BY ENGINEER, SILT DEPOSITED DURING CONSTRUCTION SHALL BE REMOVED AND TRENCH FILLED AS SHOWN WITH FIELDSTONE OR TAILNGS - MINIMUM 4" DIA.

* EXCEPT AT PIPE DISCHARGE POINT : A PILE OF FIELDSTONE SHALL BE PLACED IN TRENCH AS A " SPLASH PLATE " TO MINIMIZE SCOURING.

LEVEL SPREADER
N.T.S.

MAINTENANCE:
WHERE THIS PRACTICE IS USED AS TEMPORARY PROTECTION FOR S.T.B. OUTLETS: MONTHLY INSPECTIONS SHALL BE MADE TO INSURE PROPER FUNCTIONING. SEDIMENT BUILD-UP SHALL BE REMOVED WHEN LEVEL REACHES 1/3 HEIGHT OF DAM. EVALUATE FILTER DAMS AND REPLACE, IF NECESSARY.

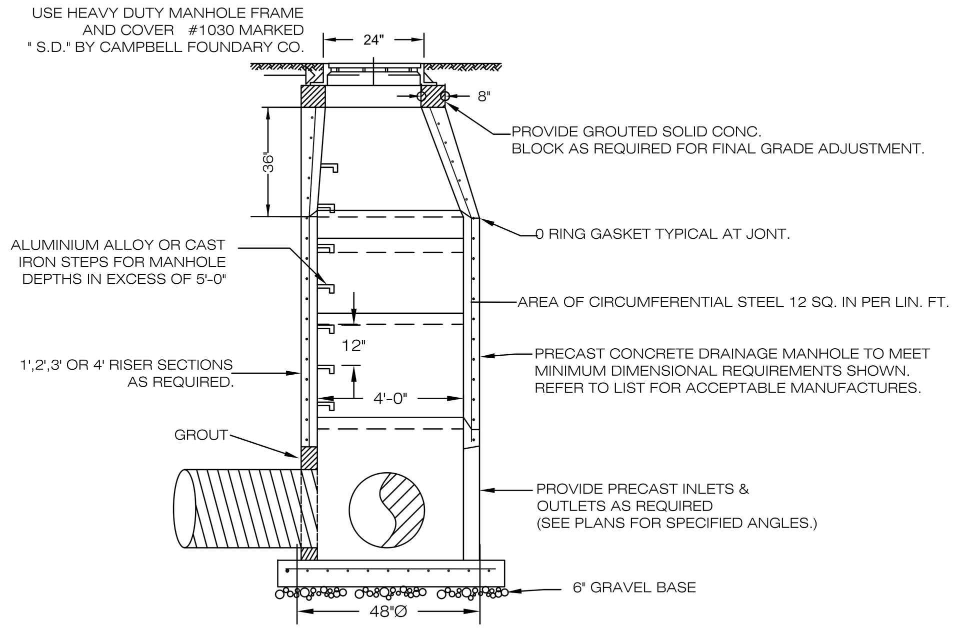

TYPICAL DRAINAGE MANHOLE
N.T.S.
(H20 DESIGN LOADING REQUIRED)

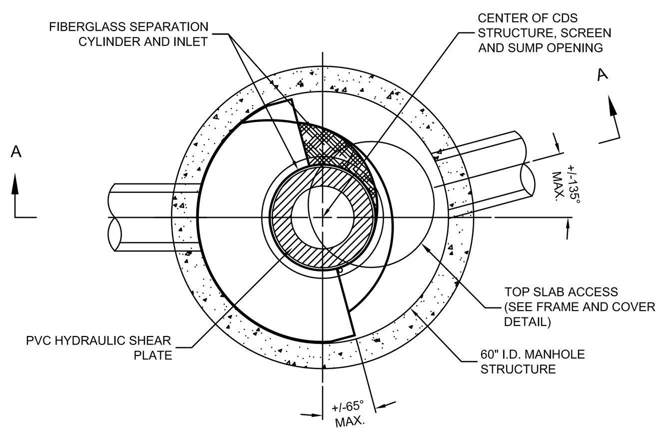

PLAN VIEW B-B
N.T.S.

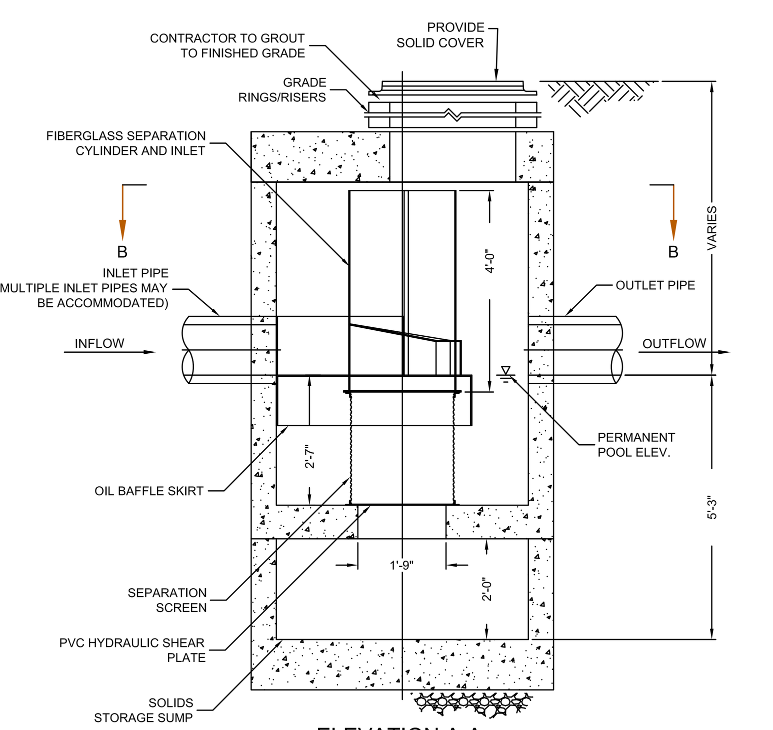

ELEVATION A-A
N.T.S.

RATED TREATMENT CAPACITY = 1.1 CFS
NOTE: PEAK FLOWS FROM 90% STORM AT ALL PROPOSED CDS UNITS ARE BELOW TREATMENT FLOW CAPACITY AND THEREFORE SHALL USE CDS 2020-C MODEL.

MAXIMUM INTERNAL BYPASS CAPACITY = 14.0 CFS
(INLET PIPE MODEL)

CONTECH STORMWATER SOLUTIONS CDS 2020-C
PRECAST CONCRETE WATER QUALITY SYSTEM DETAIL
N.T.S.

GENERAL NOTES
1. CONTECH TO PROVIDE ALL MATERIALS UNLESS NOTED OTHERWISE.
2. DIMENSIONS MARKED WITH ( ) ARE REFERENCE DIMENSIONS. ACTUAL DIMENSIONS MAY VARY.
3. FOR FABRICATION DRAWINGS WITH DETAILED STRUCTURE DIMENSIONS AND WEIGHTS, PLEASE CONTACT YOUR CONTECH STORMWATER SOLUTIONS REPRESENTATIVE. www.contechstormwater.com
4. CDS WATER QUALITY STRUCTURE SHALL BE IN ACCORDANCE WITH ALL DESIGN DATA AND INFORMATION CONTAINED IN THIS DRAWING.
5. STRUCTURE SHALL MEET AASHTO HS20 LOAD RATING, AND CASTINGS SHALL MEET AASHTO M306 LOAD RATING, ASSUMING GROUNDWATER ELEVATION AT OR BELOW OUTLET PIPE INVERT ELEVATION.
ENGINEER OF RECORD TO CONFIRM ACTUAL GROUNDWATER ELEVATION.
6. PVC HYDRAULIC SHEAR PLATE IS PLACED ON SHELF AT BOTTOM OF SCREEN CYLINDER. REMOVE AND REPLACE AS NECESSARY DURING MAINTENANCE CLEANING.

INSTALLATION NOTES
1. ANY SUB-BASE, BACKFILL DEPTH, AND/OR ANTI-FLOTATION PROVISIONS ARE SITE-SPECIFIC DESIGN CONSIDERATIONS AND SHALL BE SPECIFIED BY ENGINEER OF RECORD.
2. CONTRACTOR TO PROVIDE EQUIPMENT WITH SUFFICIENT LIFTING AND REACH CAPACITY TO LIFT AND SET THE CDS MANHOLE STRUCTURE (LIFTING CLUTCHES PROVIDED).
3. CONTRACTOR TO ADD JOINT SEALANT BETWEEN ALL STRUCTURE SECTIONS, AND ASSEMBLE STRUCTURE.
4. CONTRACTOR TO PROVIDE, INSTALL, AND GROUT PIPES. MATCH PIPE INVERTS WITH ELEVATIONS SHOWN.
5. CONTRACTOR TO TAKE APPROPRIATE MEASURES TO ASSURE UNIT IS WATER TIGHT, HOLDING WATER TO FLOWLINE INVERT MINIMUM. IT IS SUGGESTED THAT ALL JOINTS BELOW PIPE INVERTS ARE GROUTED.

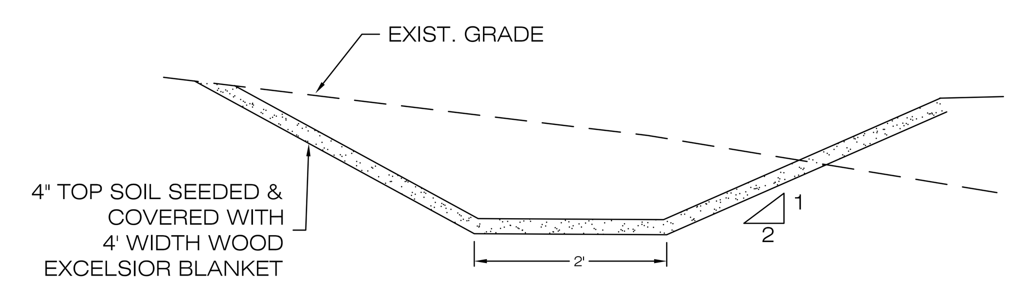

SEED MIXTURE	RATE / 1000 SF
BIRDSFOOT	.2lb
TREFOIL	.5 lb
TALL FESCUE	.1 lb
RED TOP	1 lb/1000 SF LAWN STARTING
FERTILIZER	MIX OF N.P.K.
MULCH:	CURLEX BLANKET BY AMERICAN EXCELSIOR COMPANY INSTALL AND STAPLE PER MANUFACTURER'S INSTRUCTIONS.

GRASS SWALE DETAIL
N.T.S.

CAST IRON FRAME & GRATE TO BE SUPPLIED BY CAMPELL FOUNDRY CO.
(PATTERN # 2541)

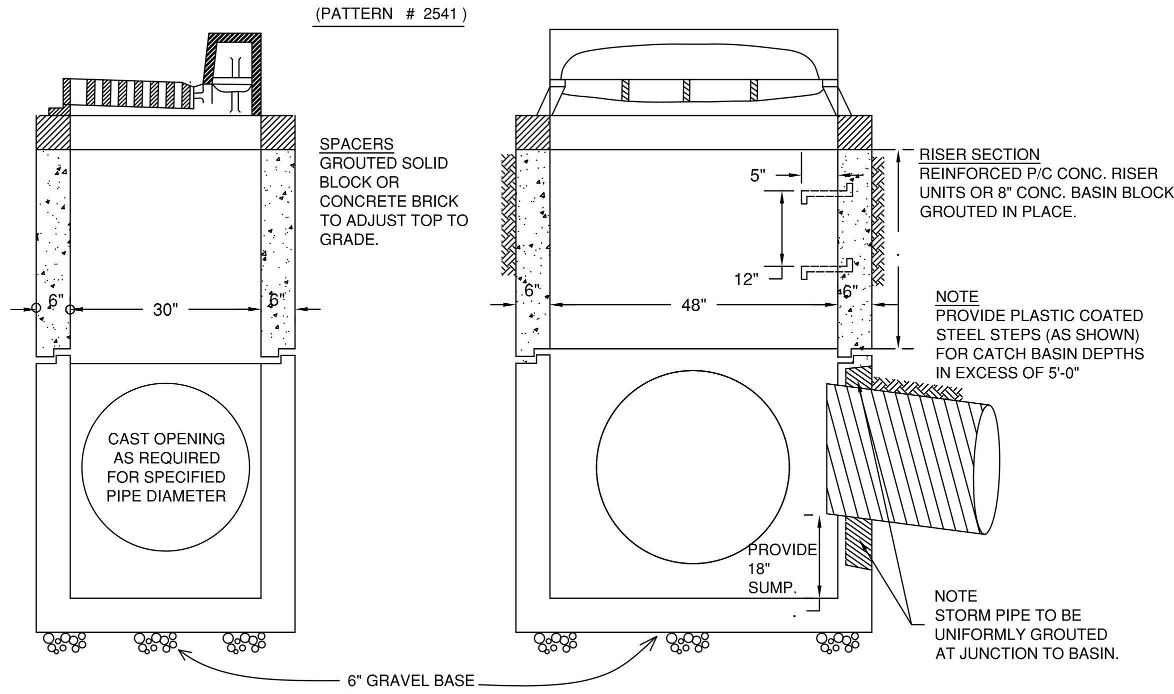

TYPICAL CATCH BASIN
N.T.S.

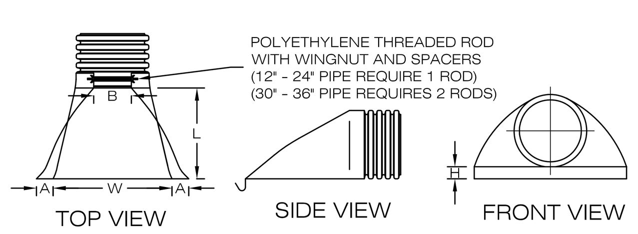

ADS PRODUCT DIMENSIONS						
PART #	PIPE Ø	A	B (MAX)	H	L	W
1210NP	12"	6.5"	10"	6.5"	25"	29"
1510NP	15"	6.5"	10"	6.5"	25"	29"
1810NP	18"	7.5"	15"	6.5"	32"	35"
2410NP	24"	7.5"	18"	6.5"	36"	45"
3015NP	30"	7.5"	12"	8.6"	36"	63"
3615NP	36"	7.5"	25"	8.6"	58"	63"

ADS - FLARED END SECTION
OR APPROVED EQUAL
N.T.S.

APPROVED BY RESOLUTION OF THE LEWISBORO TOWN PLANNING BOARD.

CHAIRMAN DATE

SECRETARY DATE

TOWN ENGINEER DATE

APPROVED FOR FILING IN THE WESTCHESTER COUNTY CLERK'S OFFICE, DIVISION OF LAND RECORDS

DANIEL HIGGINS, OWNER DATE
RIDGEVIEW DESIGNER BUILDERS, INC.

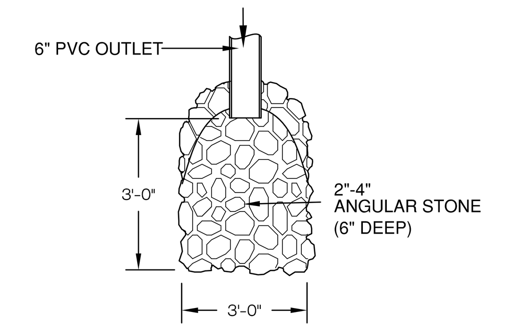

RIP RAP DRAINAGE OUTLET DETAIL
N.T.S.
(TO BE USED AT THE OUTFALL OF 6" PVC ROOF DRAINS)

UNAUTHORIZED ALTERATIONS AND ADDITIONS TO THIS DRAWING IS A VIOLATION OF SECTION 7209 (2) OF THE NEW YORK STATE EDUCATION LAW.
COPYRIGHT © 2016 BIBBO ASSOCIATES, LLP ALL RIGHTS RESERVED, UNAUTHORIZED DUPLICATION IS A VIOLATION OF APPLICABLE LAWS

DATE: 05-09-05

REVISION	
06-16-11	Conservation Plan
09-01-12	Review / Response
11-10-14	Review / Response
2-17-15	Review / Response
7-20-15	Review / Response
12-10-15	Review / Response
3-16-16	Review / Response
10-26-16	New Road
11-14-16	Revision

ENGINEERING CONSULTANT:
BIBBO ASSOCIATES, L.L.P.
CONSULTING ENGINEERS AND PLANNERS
MILL POND OFFICES
293 ROUTE 100, SUITE 203
SOMERS, NEW YORK
TEL (914) 277-5805
TIMOTHY S. ALLEN, P.E.

ENVIRONMENTAL CONSULTANT:
EVANS ASSOCIATES
ENVIRONMENTAL CONSULTING, INC.
205 Amity Road
Bethany, Connecticut 06524
T. (203) 393-0690
F. (203) 393-0196

DWG. TITLE: ADDITIONAL DETAILS

PROJECT NAME: SILVERMINE PRESERVE
SILVERMINE DRIVE & LOCKWOOD ROAD
TOWN OF LEWISBORO, NEW YORK

Dwn. by:
Checked by:
Doc. ID:
EAEC Proj. No.: 809
DWG. NO.:

D-2
SHEET 10 OF 12

P:\Projects\MOSS-SILVER\dwg\Moss - Silvermine Subdivision 11-7-16.dwg, SW DETAILS, 11/14/2016 11:35:24 AM, NHawvermale, 1:1

TEMPORARY SEDIMENT BASINS

(*) see table for Stormwater Ponds)

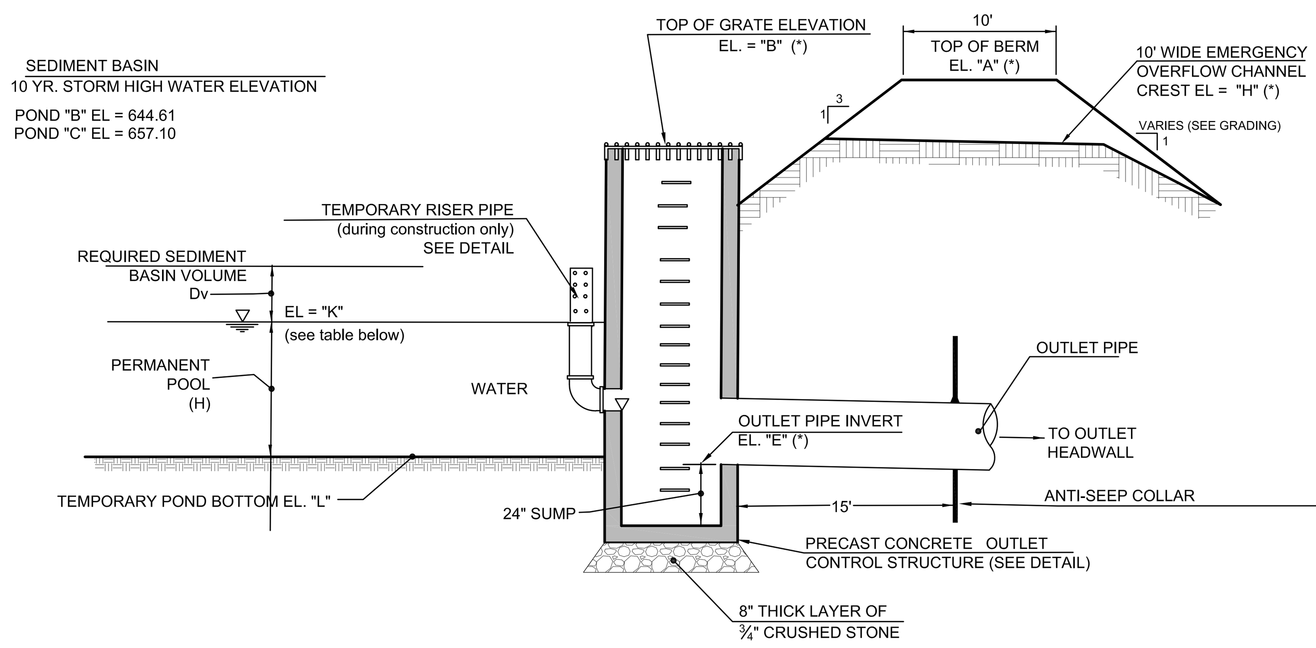

X- SECTIONAL VIEW
N.T.S.

Stormwater Basin as a Sediment Basin	Watershed Area (ac)	Required		Provided						
		Basin Volume (cf)	Pool Volume (cf)	Basin Volume (cf)	Pool Volume (cf)	Pool El. "K"	Dv ELEV.	Dv HT.	H	Temporary Bottom El. "L"
SB-1 (*)	-	-	-	-	-	-	-	-	-	-
SB-2 (**)	3.11	11,196	5,598	11,315	6,917	599.0	600.25	1.25'	2.0'	597.0
SB-3 (**)	1.80	6,480	3,240	18,138	4,640	598.25	599.25	1.0'	1.25'	597.0
SB-4 (**)	4.73	17,028	8,514	17,043	8,656	585.4	587.0	1.6'	2.4'	583.0

(*) SB-1 (EXISTING WETLAND) **SHALL NOT** BE USED AS SEDIMENT BASIN DURING CONSTRUCTION. USE TEMP. WATER BREAKS TO DIVERT RUNOFF PAST BASIN AND INTO TEMPORARY SILT TRAPS DOWNSTREAM. THE OUTLET FROM CB #6 SHALL BE PLUGGED DURING CONSTRUCTION.

(**) SB-2, SB-3, SB-4 (INFILTRATION BASINS) TO BE EXCAVATED TO 1 FOOT ABOVE FINAL BASIN BOTTOM (EL. "F"). ONCE THE TRIBUTARY AREAS HAVE BEEN STABILIZED; REMOVE ACCUMULATED SEDIMENT, REGRADE BASIN TO FINAL ELEVATIONS, AND ADJUST OUTLET STRUCTURE TO FINAL SPECIFICATIONS AS PER THE PLANS AND DETAILS.

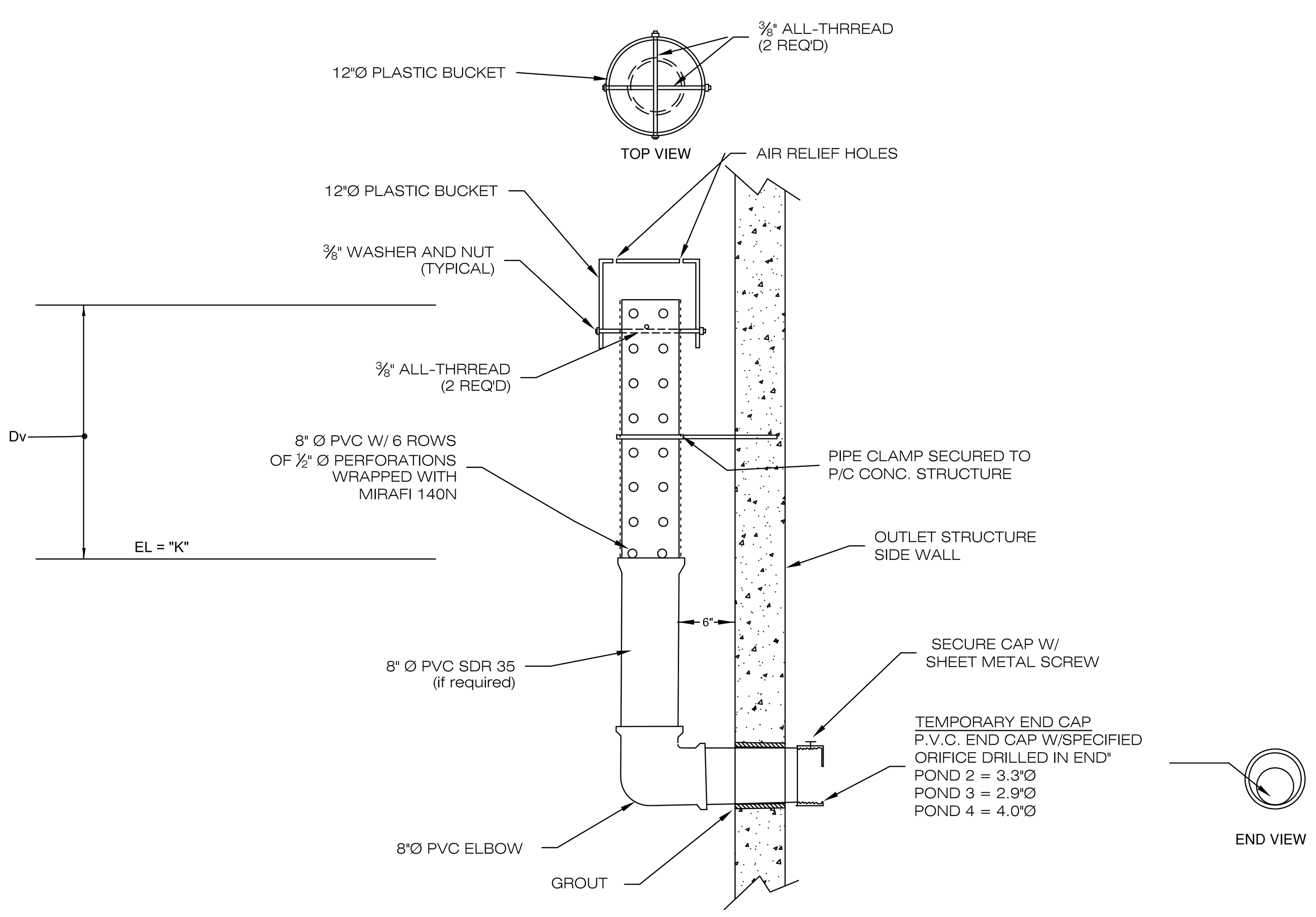

TEMPORARY SEDIMENT BASIN RISER DETAIL
N.T.S.

APPROVED BY RESOLUTION OF THE LEWISBORO TOWN PLANNING BOARD.

CHAIRMAN DATE

SECRETARY DATE

TOWN ENGINEER DATE

APPROVED FOR FILING IN THE WESTCHESTER COUNTY CLERK'S OFFICE, DIVISION OF LAND RECORDS

DANIEL HIGGINS, OWNER DATE
RIDGEVIEW DESIGNER BUILDERS, INC.

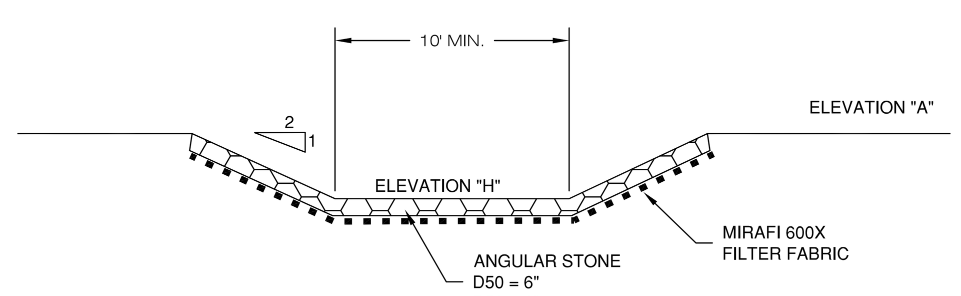

EMERGENCY OVERFLOW CHANNEL: RIP RAP LINING DETAIL
N.T.S.

UNAUTHORIZED ALTERATIONS AND ADDITIONS TO THIS DRAWING IS A VIOLATION OF SECTION 7209 (2) OF THE NEW YORK STATE EDUCATION LAW.

COPYRIGHT © 2016 BIBBO ASSOCIATES, LLP ALL RIGHTS RESERVED. UNAUTHORIZED DUPLICATION IS A VIOLATION OF APPLICABLE LAWS

P:\Projects\MOSS-SILVER\dwg\Moss - Silvermine Subdivision 11-7-16.dwg, SW-1, 11/14/2016 11:35:54 AM, NHawvermale, 1:1

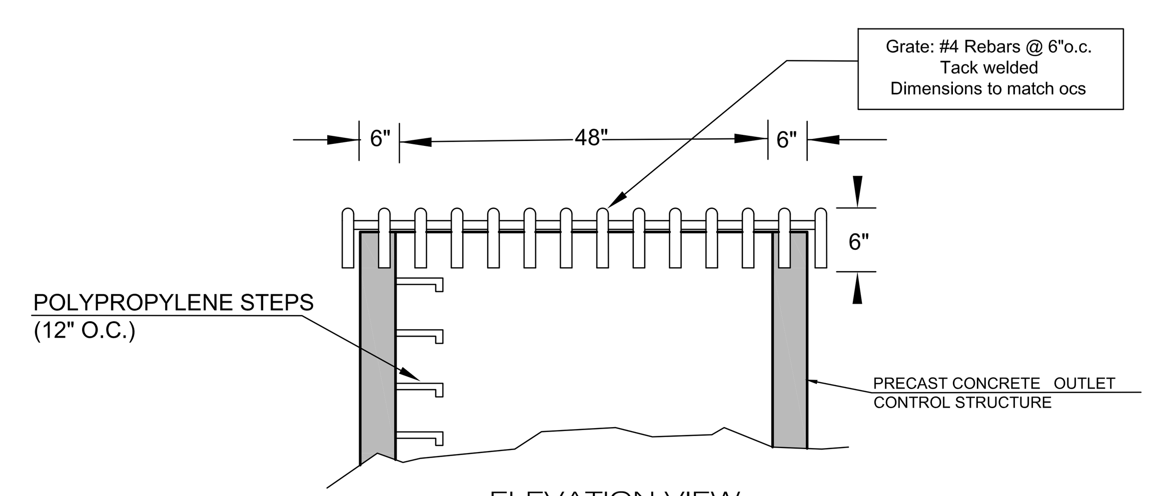

ELEVATION VIEW
N.T.S.

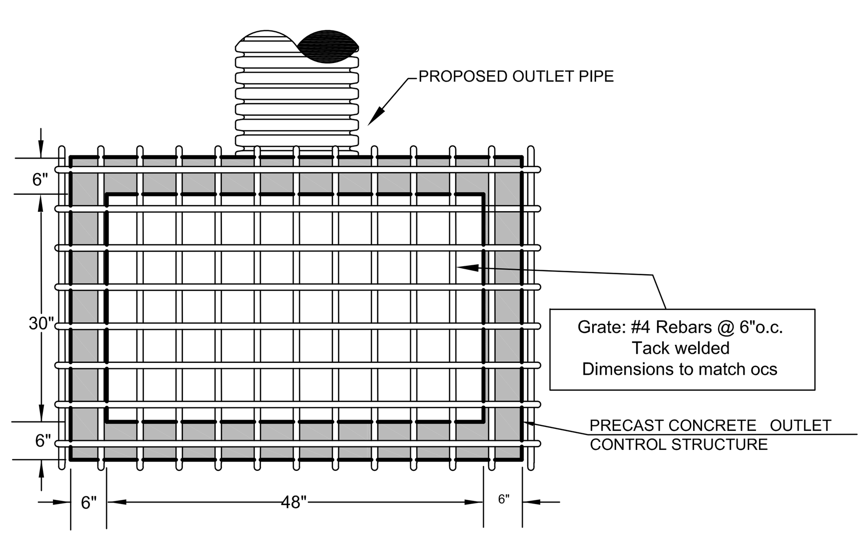

PLAN VIEW

OUTLET CONTROL STRUCTURE AND GRATE DETAIL
N.T.S.

STORMWATER BASINS

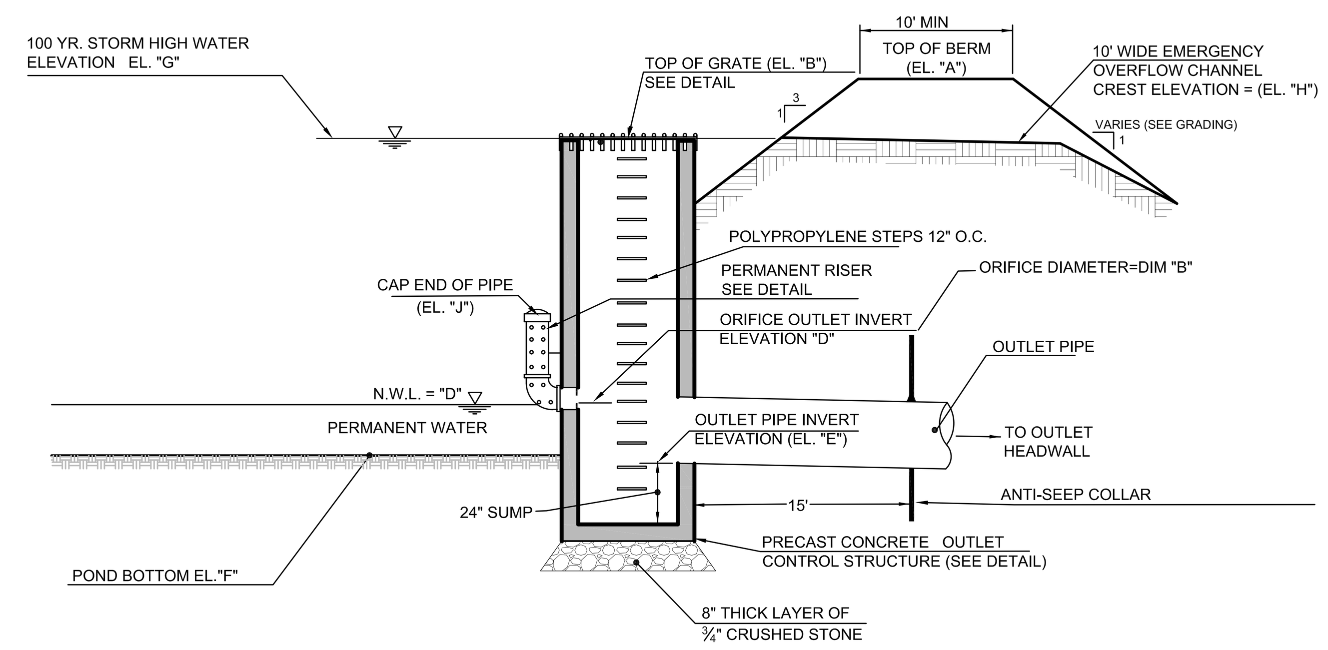

X- SECTIONAL VIEW
N.T.S.

STORMWATER QUALITY BASIN #	DESIGN FUNCTION	ELEVATIONS								DIMENSIONS	OUTLET PIPE		
		EL. "A"	EL. "B"	EL. "D"	EL. "E"	EL. "F"	EL. "G"	EL. "H"	EL. "J"	DIM. "B" (Ø INCH)	DIA./MATERIAL (INCH)	SLOPE	LENGTH
SB-1	EXISTING WETLAND	617.0	615.5	614.75	614.25	613.5	615.64	-	614.5	1.0"	15" HDPE	1.4 %	18'
SB-2	INFILTRATION BASIN (I-2)	602.2	600.0	598.4	596.0	596.0	600.25	601.2	598.4	1.0"	12" HDPE	1.4 %	74'
SB-3	INFILTRATION BASIN (I-2)	602.0	601.0	597.8	596.0	596.0	600.77	601.5	597.8	0.8"	12" HDPE	1.4 %	37'
SB-4	INFILTRATION BASIN (I-2)	588.40	587.0	584.0	583.5	582.0	587.37	587.9	586.0	1.0"	15" HDPE	2.4 %	21'

STORMWATER BASIN
OUTLET CONTROL CONFIGURATION
N.T.S.

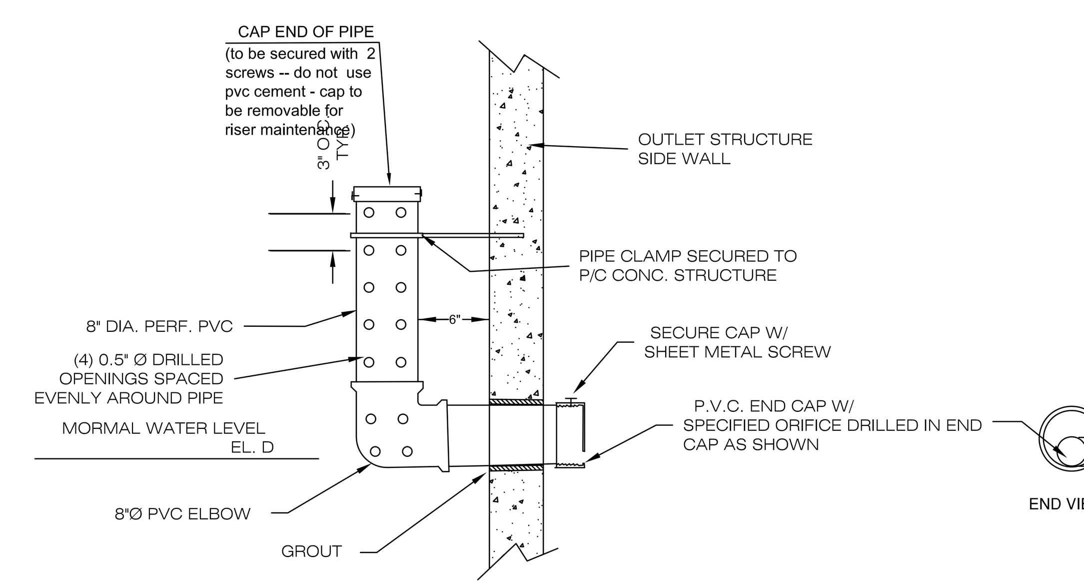

PERMANENT STORMWATER POND RISER DETAIL
N.T.S.

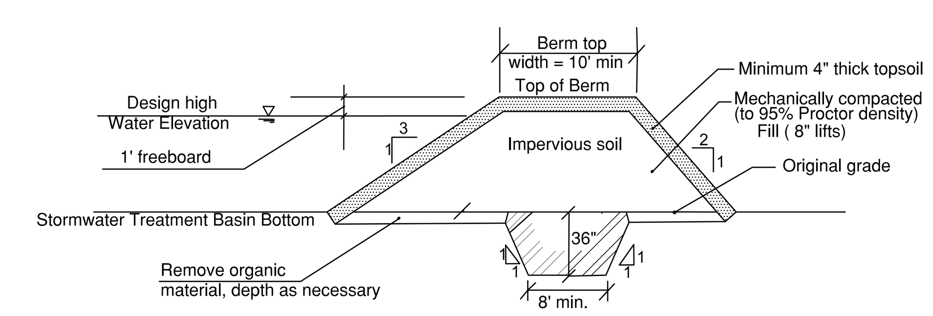

STORMWATER BASIN BERM DETAIL
N.T.S.

Whenever a berm is to be constructed on a slope:
The subgrade shall be benched to provide level surfaces for proper operation of compaction equipment.

CONSTRUCTION SPECIFICATIONS

1. " EMBANKMENT MATERIAL SHALL CONSIST OF SELECT GLACIAL TILL COMPRISED OF A MIX OF SILT, SAND, CLAY AND GRAVEL FROM ONSITE EXCAVATION. THE PERCENTAGE OF FINES PASSING THE 200 SIEVE SHALL BE AT LEAST 20% BY WEIGHT BORROW MATERIAL SHALL BE TESTED FOR OPTIMUM MOISTURE CONTENT AND PROCTOR MAXIMUM DRY DENSITY. MATERIAL WITH MOISTURE CONTENT IN EXCESS OF OPTIMUM SHALL BE DRIED TO THE REQUIRED OPTIMUM CONTENT BY SPREADING, HARROWING, BLADING OR OTHER APPROVED MEANS PRIOR TO PLACEMENT IN THE BERM. NO STONES GREATER IN SIZE THAN 6 INCHES IN MAXIMUM DIMENSIONS AND NO ORGANIC MATERIAL SHALL BE ALLOWED IN THE EMBANKMENT.

2. THE GROUND SURFACE UNDER THE EMBANKMENT SHALL BE STRIPPED OF ALL VEGETATION, ROOTS, TOPSOIL AND SUBSOIL TO THE DEPTH INDICATED ON THE DETAIL. AFTER STRIPPING TO SUBGRADE THE EARTH SHALL BE MOISTENED, IF DRY, AND COMPACTED BEFORE PLACEMENT OF THE FIRST LAYER OF EMBANKMENT MATERIAL.

3. THE EMBANKMENT SHALL BE CONSTRUCTED IN EVEN EIGHT(8) INCH LIFTS AND MECHANICALLY COMPACTED TO A MINIMUM DRY DENSITY OF 95% OF MAXIMUM DENSITY AS DETERMINED BY THE STANDARD COMPACTION TEST.

4. COMPACTION EQUIPMENT

   A) EMBANKMENT LIFTS-LIFTS SHALL BE COMPACTED WITH A SMOOTH STEEL WHEEL VIBRATORY ROLLER HAVING A NOMINAL GROSS WEIGHT OF NOT LESS THAN 10 TONS AND EXERT A MINIMUM FORCE OF NOT LESS THAN 300 POUNDS PER INCH OF WIDTH ON THE COMPRESSION ROLL FACES.

   B) SPECIALLY COMPACTED EARTH FILL- WHERE COMPACTION BY MEANS OF THE SPECIFIED ROLLER IS IMPRACTICAL AT SUCH LOCATIONS AS STEEP AND IRREGULAR ABUTMENTS, ROUGH AND IRREGULAR FOUNDATIONS, ADJACENT TO OUTLET WORKS, COMPACTION EQUIPMENT SHALL INCLUDE IMPACT RAMMERS, SMALL DRUM VIBRATORS, OR OTHER APPROVED MECHANICAL TAMPERS. THE MATERIAL, MOISTURE AND DENSITY SHALL BE AS SPECIFIED ABOVE EXCEPT THAT ROCK SIZE SHALL BE LIMITED TO 2 INCHES. LIFT THICKNESS SHALL BE REDUCED IF NECESSARY TO ACHIEVE THE REQUIRED COMPACTION WITH THE EQUIPMENT USED.

5. ANTI-SEEP COLLARS AS SUPPLIED BY SCHEIB DRAINAGE PRODUCTS, OREGON, MO. TO BE INSTALLED ON ALL OUTLET PIPES PENETRATING THE BERM.

DATE: 05-09-05

REVISION

06-16-11	Conservation Plan
09-01-12	Review / Response
11-10-14	Review / Response
2-17-15	Review / Response
7-20-15	Review / Response
12-10-15	Review / Response
3-16-16	Review / Response
10-26-16	New Road
11-14-16	Revision

ENGINEERING CONSULTANT:
BIBBO ASSOCIATES, L.L.P.
CONSULTING ENGINEERS AND PLANNERS
MILL POND OFFICES
293 ROUTE 100, SUITE 203
SOMERS, NEW YORK
TEL (914) 277-5805

TIMOTHY S. ALLEN, P.E.

ENVIRONMENTAL CONSULTANT:
EVANS ASSOCIATES
ENVIRONMENTAL CONSULTING, INC.
205 Amity Road
Bethany, Connecticut 06524
T. (203) 393-0690
F. (203) 393-0196

DWG. TITLE: STORMWATER MANAGEMENT

PROJECT NAME: SILVERMINE PRESERVE
SILVERMINE DRIVE & LOCKWOOD ROAD
TOWN OF LEWISBORO, NEW YORK

Dwn. by:
Checked by:
Doc. ID:
EAEC Proj. No.: 809
DWG. NO.:

SW-1
SHEET 11 OF 12

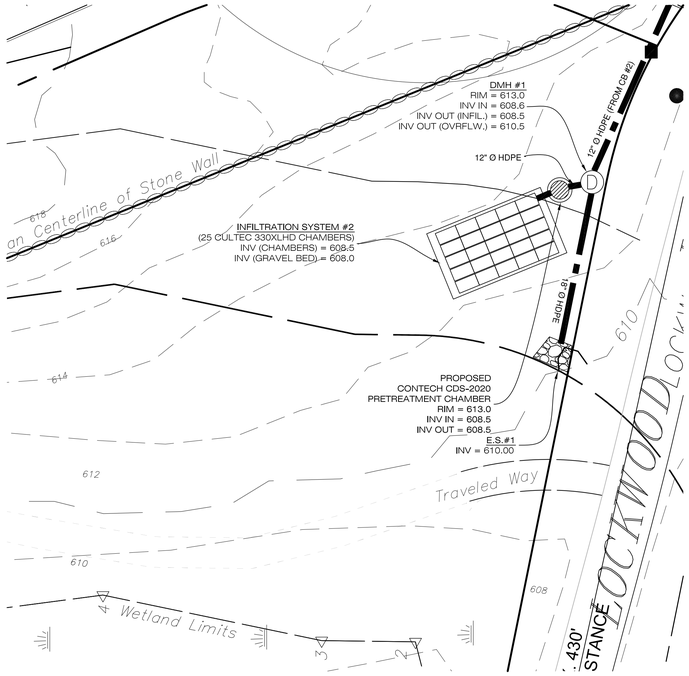

INFILTRATION SYSTEM #2
SCALE 1" = 20'

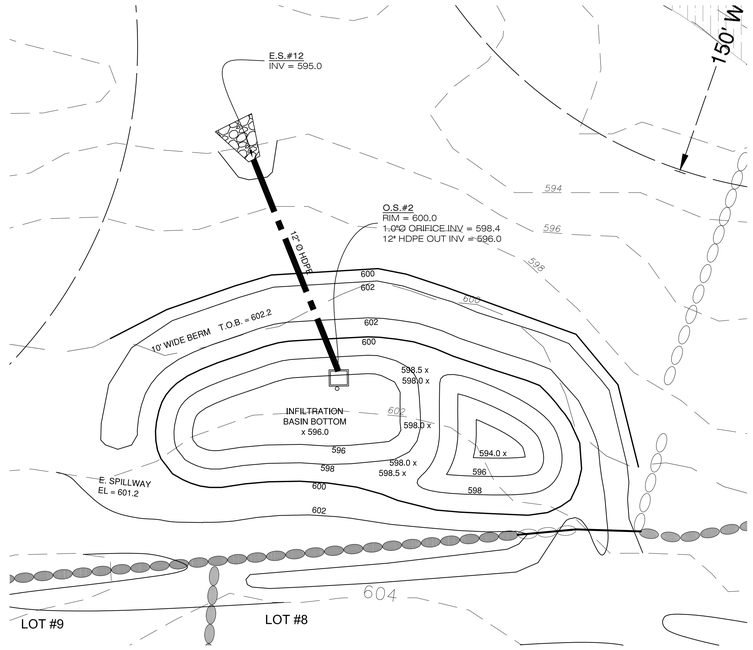

STORMWATER BASIN #2
SCALE 1" = 20'

BASIN DIMENSIONAL REQUIREMENTS:

ELEVATION	AREA	COMMENTS
596.0	1,330 SF	BOTTOM
598.0	2,436 SF	
600.0	6,022 SF	RIM ELEVATION
601.0	7,047 SF	
602.0	8,129 SF	

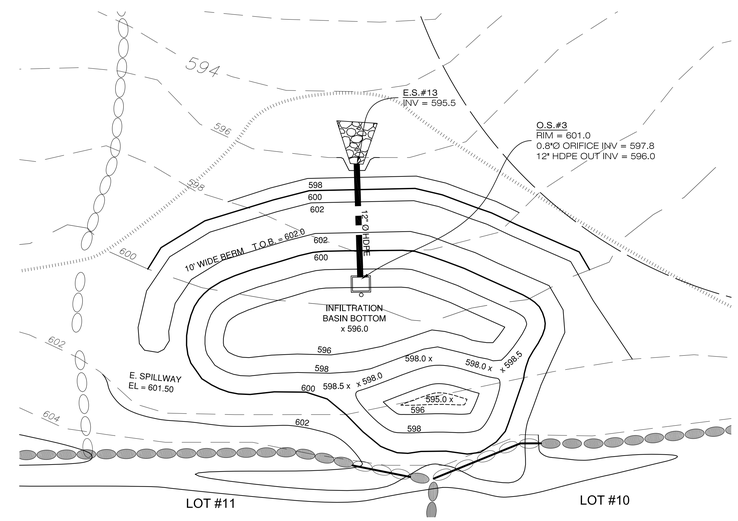

STORMWATER BASIN #3
SCALE 1" = 20'

BASIN DIMENSIONAL REQUIREMENTS:

ELEVATION	AREA	COMMENTS
596.0	1,406 SF	BOTTOM
598.0	2,703 SF	
600.0	5,534 SF	
601.0	6,463 SF	RIM ELEVATION
602.0	7,433 SF	BERM ELEVATION

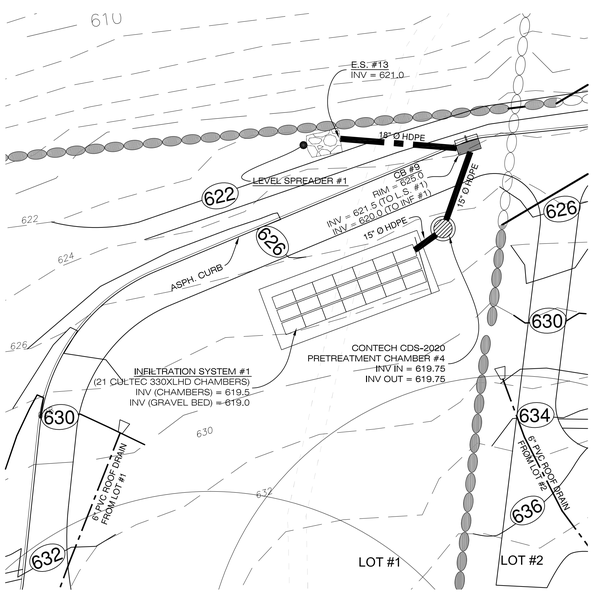

INFILTRATION SYSTEM #1
SCALE 1" = 20'

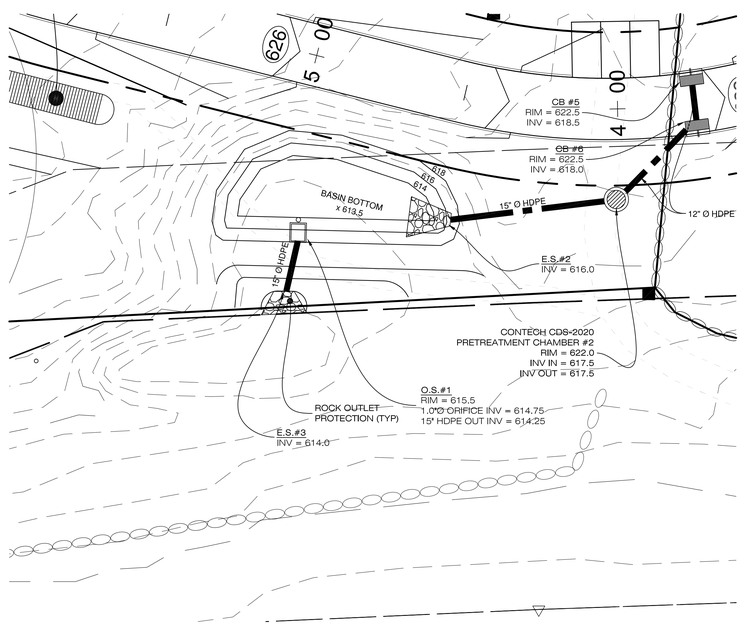

STORMWATER BASIN #1 (EXISTING WETLAND)
SCALE 1" = 20'

BASIN DIMENSIONAL REQUIREMENTS:

ELEVATION	AREA	COMMENTS
613.5	218 SF	BOTTOM OF BASIN
614.0	1,670 SF	
616.0	2,673 SF	
617.0	4,584 SF	

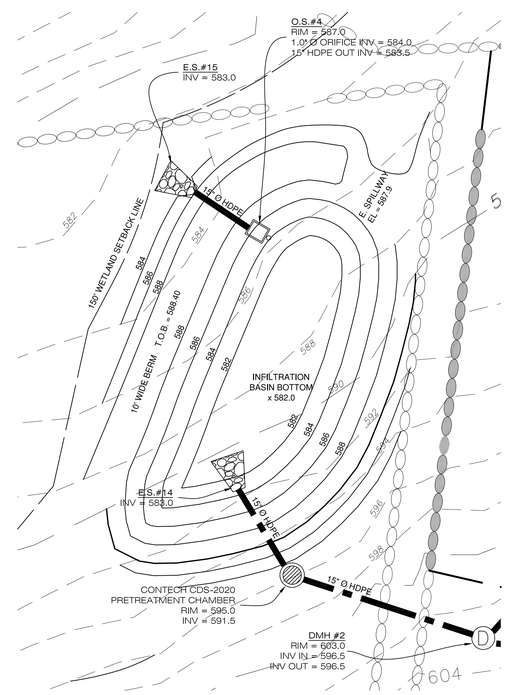

STORMWATER BASIN #4
SCALE 1" = 20'

BASIN DIMENSIONAL REQUIREMENTS:

ELEVATION	AREA	COMMENTS
582.0	2,062 SF	BOTTOM
584.0	3,442 SF	
586.0	5,063 SF	
587.0	5,959 SF	RIM ELEVATION
588.0	6,912 SF	

APPROVED BY RESOLUTION OF THE LEWISBORO TOWN PLANNING BOARD.

CHAIRMAN DATE

SECRETARY DATE

TOWN ENGINEER DATE

APPROVED FOR FILING IN THE WESTCHESTER COUNTY CLERK'S OFFICE, DIVISION OF LAND RECORDS

DANIEL HIGGINS, OWNER DATE
RIDGEVIEW DESIGNER BUILDERS, INC.

UNAUTHORIZED ALTERATIONS AND ADDITIONS TO THIS DRAWING IS A VIOLATION OF SECTION 7209 (2) OF THE NEW YORK STATE EDUCATION LAW.

COPYRIGHT © 2016 BIBBO ASSOCIATES, LLP ALL RIGHTS RESERVED. UNAUTHORIZED REPRODUCTION IS A VIOLATION OF APPLICABLE LAWS

DATE: 05-09-05

REVISION

06-16-11	Conservation Plan
09-01-12	Review / Response
11-10-14	Review / Response
2-17-15	Review / Response
7-20-15	Review / Response
12-10-15	Review / Response
3-16-16	Review / Response
10-26-16	New Road
11-14-16	Revision

ENGINEERING CONSULTANT:
BIBBO ASSOCIATES, L.L.P.
CONSULTING ENGINEERS AND PLANNERS
MILL POND OFFICES
283 ROUTE 100, SUITE 203
SOMERS, NEW YORK
TEL (914) 277-5905
TIMOTHY S. ALLEN, P.E.

ENVIRONMENTAL CONSULTANT:
EVANS ASSOCIATES
ENVIRONMENTAL CONSULTING, INC.
205 Amity Road
Bethany, Connecticut 06524
T. (203) 393-0690
F. (203) 393-0196

DWG. TITLE:
STORMWATER MANAGEMENT

PROJECT NAME:
SILVERMINE PRESERVE
SILVERMINE DRIVE & LOCKWOOD ROAD
TOWN OF LEWISBORO, NEW YORK

Dwn. by:
Checked by:
Doc. ID:
EAEC Proj. No.: 809
DWG. NO.:

SW-2
SHEET 12 OF 12

P:\Projects\MOSS-SILVER\dwg\Moss - Silvermine Subdivision 11-7-16.dwg, SW-2, 11/14/2016 11:56:56 AM, Nitiworrmatic 1:1

Westchester Land Trust
It's Our Nature

June 29, 2016

Memo To: Jerome Kerner, Chairman, and Members
Town of Lewisboro Planning Board
From: David M. Emerson, Land Project Manager
Subject: Silvermine Subdivision – Open Space Parcel
==========

BOARD OF DIRECTORS
Jonathan L. Wiesner, *Chair*
Benjamin F. Needell, *Vice-Chair*
Bruce Churchill, *Treasurer*
Susan S. Henry, *Secretary*
Stephen R. Beckwith
Nanette Bourne
Catherine Diao
Peter DiCorpo
Amy Ferguson
Jerome R. Goldstein
David Grech
Douglas M. Kraus
Betsy Lifschultz
Vivien G. Malloy
Lee Manning-Vogelstein
Allyson Mawe
Renee Ring
Jennifer Schwartz
David H. Small
Susan Todd

CHAIRMAN EMERITUS
George D. Bianco

ADVISORY BOARD OF DIRECTORS
George D. Bianco, *Chair*
Joe Edgar
Daniel H. Ginnel
Eli B. A. Halliwell
Megan W. Kulick
Rick Magder
Jane Pearl
Mary Ann Petrilena
Sharon Pickett
Pam Pooley
Paul C. Sisson
Glenn Ticehurst
Michael Yellin
Paul J. Zofnass

President
Lori J. Ensinger

Thank you for the opportunity to provide additional information about the management of Westchester Land Trust (WLT) preserves in response to a request for information from the Planning Board's meeting held on June 21. The open space parcel proposed to be created as part of the Silvermine Estates subdivision would, if ownership is transferred to WLT, be managed, maintained and made available for public use the same way as WLT's current preserves in Lewisboro and in other communities in Westchester and Putnam Counties.

Access and Passive Recreation

The open space lot is accessible from Silvermine Road, a public road owned and maintained by the Town of Lewisboro. The development plan provides for alternative access, including designated parking spaces and an "Open Land Access Path," from the proposed new private roadway connecting to Lockwood Road.
(Drawings MP-1/MP-2, dated: 10/8/ 2012, revised 5/2016 & attached Concept Drawing)

One vehicle for memorializing proposed access, which would be noted on the final plat and in the certificate of approval, could be an access easement.

Motorized vehicles (including ATV's) and camping are prohibited on WLT preserves as noted in the summary document presented previously and dated May 24, 2016.

Passive recreation on WLT preserves encompasses outdoor recreational activities, such as nature observation, hiking, and riding (where appropriate) that require a minimum of facilities or development and that have minimal environmental impact on the site. No WLT preserve currently has trails suitable or open for bicycles. Use of trails by mountain bikers would depend on an assessment of site conditions during the management planning process and a determination that such use would be appropriate. The size, geometry, and terrain of the Silvermine open space do not appear suitable for bicycle use.

Select WLT preserves are accessible to horses with trails maintained in cooperation with local equestrian groups including the Lewisboro Horsemen's Association (Frederick P. Rose Preserve and Rock Shelter Preserve) and the Bedford Riding Lanes Association (Guard Hill Preserve). Use of trails by horses would depend on an assessment of site conditions during the management planning process and a determination that such use would be appropriate. The size, geometry, and terrain of the Silvermine open space do not appear suitable for equestrian use.

There are no open space parcels, or trail linkages adjoining or proximate to this site, so connectivity to enhance recreation opportunities are not available at this time.

phone 914.234.6992 | 403 Harris Road
fax 914.234.6673 | Bedford Hills, NY 10507
info@westchesterlandtrust.org | westchesterlandtrust.org

Access and Passive Recreation (Cont.)

Dogs are allowed on WLT preserves in accordance with local ordinances. In Lewisboro, that means dogs must be on leash or under voice control of owner. (The rationale is that local animal control can only take action, should a complaint be received, consistent with the provisions of the Town Code.) If fragile habitat or wildlife susceptible to disturbance were found to be present, WLT would be more restrictive and require dogs to be leashed.

WLT preserves with trails are open to all visitors, and not restricted to the residents of the town(s) in which they are located. However, most preserves function as neighborhood amenities due to small size, parking constraints, absence of notable significant features, plethora of alternative sites, and so forth.

The Silvermine open space parcel is suitable for hiking, and in fact has a history of such use, and the formalizing of at least one loop trail accessing all corners of the property is easily achievable thanks to an existing network of informal pathways. These pathways would be the foundation for a marked and mapped initial trail as described in the summary document submitted previously and dated May 24, 2016.

Maintenance of Open Space Lands

As a WLT preserve, the Silvermine open space would be maintained by WLT staff working with local volunteers and others. In Lewisboro, WLT shares volunteers and expertise with the Open Space Preserves Advisory Committee and the Lewisboro Land Trust. Maintenance protocols are detailed in the May 24 summary.

Stewardship Plan

A Stewardship Plan (or Comprehensive Management Plan), such as will be created for the Silvermine open space parcel when ownership is transferred to WLT, follows a format that includes:

INTRODUCTION
A. About the Westchester Land Trust; Significance of property to WLT's Conservation Mission
B. Management Planning Guidance

PROPERTY DESCRIPTION
A. Property Profile
B. Regional Setting & History (land use history and cultural resources)
C. Conservation Values

SITE CHARACTERISTICS
A. Physical and Natural Resources
B. Cultural & Historical Resources
C. Threats, Issues and Opportunities

STEWARDSHIP GOALS & MANAGEMENT RECOMMENDATIONS
A. Boundary Posting
B. Public Use (Passive Recreation), Access and Parking
C. Trails & Signage
D. Critical Habitats
E. Habitat Management for Wildlife
F. Invasive Species & Native Plants
G. Conservation Programs

Stewardship Plan (Cont.)

IMPLEMENTATION SCHEDULE
A. Chart depicting Stewardship Priority Projects, Timeline and Budget
B. Development and Acquisitions Strategies

APPENDICES

APPENDIX A – List of Selected Flora
APPENDIX B – List of Fauna
APPENDIX C – Site Location Map
APPENDIX D – Orthological Photo Map
APPENDIX E – Surrounding Open Space Map
APPENDIX F – Environmental Features Map
APPENDIX G – Soils Map
APPENDIX H – Watershed Drainage Map
APPENDIX I – Trail Map
APPENDIX J - Map of Key Abutters and Properties with Development and Acquisition Potential

A Comprehensive Management Plan will be completed by WLT staff within six months of acquisition with input from all existing and potential stakeholders as well as local naturalists and others.

Attachment: Silvermine Estates Trails Concept Map

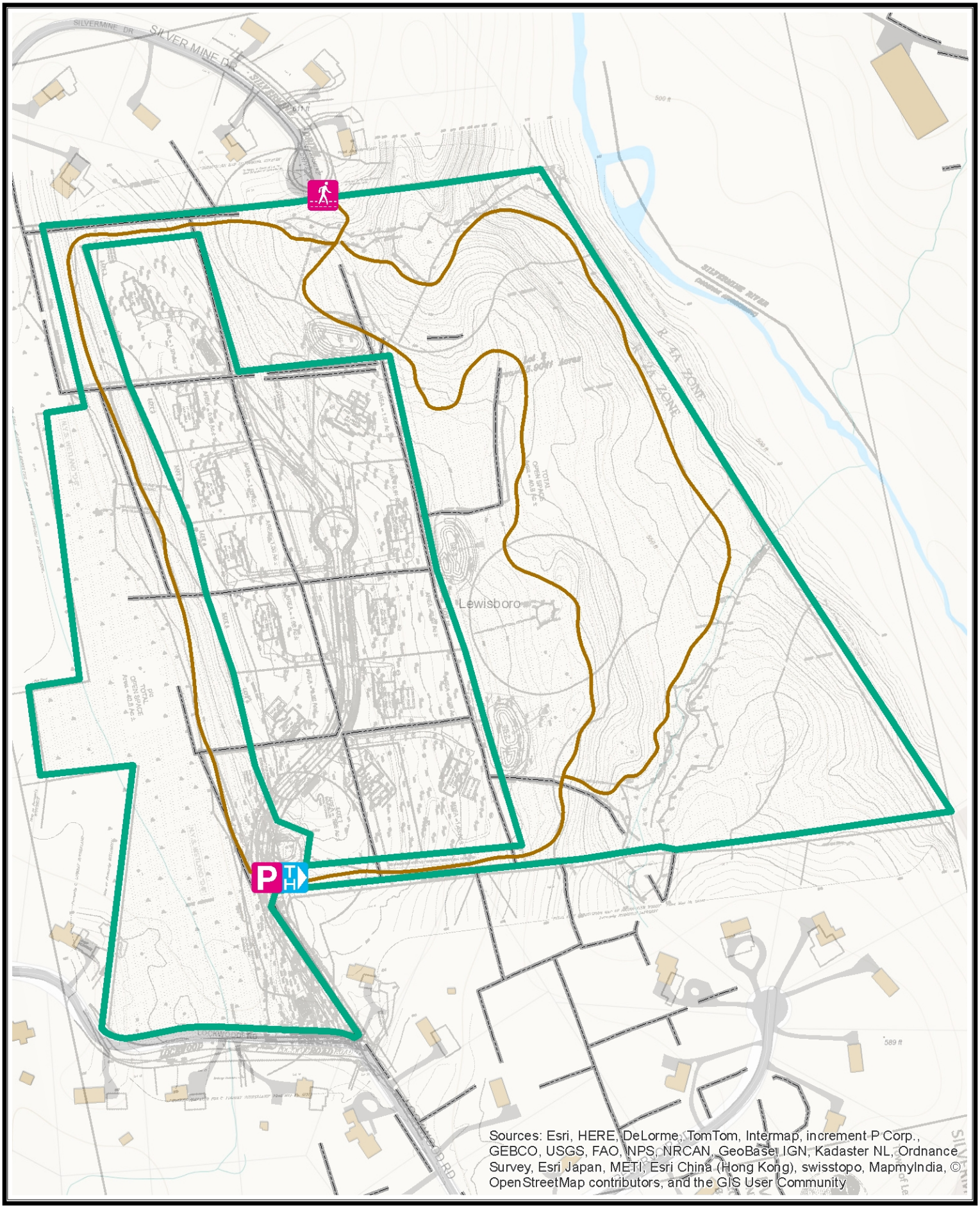

Westchester Land Trust
It's Our Nature

Silvermine Preserve Subdivision
Potential Trail Loops - 1.3 +/- miles

N

Westchester Land Trust
It's Our Nature

May 24, 2016

About the Westchester Land Trust

Founded in 1988 by dedicated residents, Westchester Land Trust works with public and private partners to preserve land in perpetuity, and to protect and enhance the natural resources in our communities. Countywide, the Land Trust has preserved more than 8,000 acres through accepting the donations of conservation easements, or by accepting the donation of parcels of land by the transfer of ownership. WLT's conservation efforts impact the long-term health of our cities, towns and villages through protection of watersheds, wildlife, air quality, and local food supply.

Westchester Land Trust has worked to protect properties of high conservation value in Westchester County and eastern Putnam County and to maintain them to the highest standards. To ensure these standards are met, a program of careful planning and sound management is essential.

In Lewisboro, Westchester Land Trust owns eight properties encompassing 184 acres. Of these properties, five are open to the public and have established marked trails that are maintained by WLT staff working with local volunteers. Preserves with trails are:

- Frederick P. Rose Preserve (Cross River) – 85.6 acres, 1.7 miles of trails
- Rock Shelter Preserve (Cross River) – 26 acres, 0.8 miles of trails
- Love Preserve (Vista) – 11 acres, 1.1 miles of trails
- Pine Croft Meadow Preserve – 9.1 acres, 0.5 miles of trails
- Old Church Lane Preserve (South Salem) – 30.8 acres, 0.7 miles of trails*****
  ***Old Church Lane Preserve is similar to Silvermine Estates in physical features and natural character, surrounding residential neighborhood, management characteristics, and potential users.**

Westchester Land Trust follows practices articulated in its Land Policy Manual, a document adopted by its Board of Directors and accepted by the Land Trust Alliance (LTA) as part of WLT's accreditation by the LTA. For fee-owned properties (land donated or transferred), the following practices apply:

WLT accepts a major stewardship responsibility when it accepts fee simple ownership. When WLT accepts any property interest it develops a comprehensive stewardship plan for monitoring (seasonal visits and visits after major storm events or reports of damage or other problems), enforcing against encroachment or trespass, facilitating public access and use where appropriate, and implementation of habitat enhancement. Fee donations or ownership transfers are approved by the Executive Committee on behalf of the Board of Directors. (Silvermine Resolution of committee approval - dated May 2, 2016.)

At the time of closing, at a minimum, a general written statement about the management goals/needs for the property (Management Summary* document) must be completed. The final comprehensive management plan must be completed no later than six months after closing.

Within six months of acquisition, a Comprehensive Management Plan* will be completed by the Director of Stewardship and stewardship staff.

Within six months of acquisition, Director of Stewardship assures boundaries are marked, and monitoring and stewardship activity schedules are established.

***Management planning and preserve management are undertaken at the staff level with no Board approval required.**

Management Planning Guidance

The Westchester Land Trust is entrusted with the responsibility to care for the properties that it owns. The land trust will strive to maintain each property to the highest standard practicable and appropriate to its unique character as catalogued in the comprehensive management plan document prepared for the preserve.

Given resource constraints, WLT must prioritize preserve management and land stewardship efforts based on key criteria including: public accessibility and opportunity for public engagement, quality of conservation values and the severity of their threats, financing opportunities, and potential efficacy of management. In other words, those WLT's preserves that are small, out of the way, difficult to access and that consist of unthreatened conservation values may not be prioritized for management and stewardship.

Preserve management pertains to the legal, ethical and 'good-neighbor' aspects of responsible land ownership and includes activities such as posting property boundaries; mitigating unsafe conditions; corresponding and meeting with neighbors; maintaining good 'curbside appeal'; and securing or facilitating safe access where appropriate.

Land stewardship pertains to actively enhancing the natural and cultural values of the land and includes activities such as increasing the longevity of a forest; protecting a rare species; removing or mitigating threats to biodiversity; and maintaining historic vistas. Both preserve management and land stewardship are carried out by WLT's Stewardship Department.
Restrictions on Use of Preserves

General Preserve Policy

As a general policy, WLT preserves are open to the public for hiking or passive recreation, where possible and practical. Motorized vehicles, camping, fires, littering, alcoholic beverages, and removal or disturbance of plants, wildlife, soils, and rocks are prohibited on all WLT preserves. Scientific studies on fee lands are allowed only with permission.

Silvermine Estates Preserve

The Silvermine open space parcel will be maintained and managed by the Westchester Land Trust as a nature preserve with priority given to forest health, water quality protection, habitat enhancement, passive recreation, and neighbor outreach and engagement.

Existing trails provide a foundation for more formal trail layout and development and provide a head start for facilitating public access particularly continued historic use and access (albeit without formal permission) by residents within the surrounding neighborhood. An initial mile-long loop trail is both feasible and achievable. At present, there are no existing off-site trails to provide potential connections.

The parcel is in a key location within a drinking water supply watershed, and contiguous with expansive undeveloped woodland, not all of which is protected. WLT presence will help facilitate discussions with landowners toward possible future donations of land or conservation easements.

COMPREHENSIVE CONSERVATION & MANAGEMENT PLAN

OLD CHURCH LANE PRESERVE

Town of Lewisboro, Westchester County, New York

Management Plan Incorporates the Field Assessment Report by:
James Nordgren, Consulting Naturalist – July 2012

and was compiled by:
Taylor Bushell, Land Steward
Westchester Land Trust
Bedford Hills, New York 10507
January 2014

Funding for the preparation of this management plan was provided, in part, by a grant from the New York State Conservation Partnership Program administered by the Land Trust Alliance.

WESTCHESTER LAND TRUST
Preserving Westchester's Lands and Communities

Table of Contents –

I. INTRODUCTION

A. About the Westchester Land Trust
Significance of Old Church Lane Preserve to WLT's Conservation Mission
B. Management Planning Guidance

II. PROPERTY DESCRIPTION

A. Property Profile
1. Parcels
2. Coordinates
3. Acquisition history
4. Directions
B. Regional Setting & History (land use history and cultural resources)
C. Conservation Values
1. Public recreation and education
2. Natural features and habitats
3. Open space and natural buffers
4. Drinking water protection

III. SITE CHARACTERISTICS

A. Physical and Natural Resources
1. Climate
2. Geology
3. Topography
4. Hydrology
5. Soils
6. Vegetation Communities and Habitats
a. Open wetland
b. Riverine wetland
c. Dry upland forest
e. Invasive plants
7. Wildlife
a. Mammals
b. Birds
c. Reptiles and amphibians
B. Cultural & Historical Resources
C. Threats, Issues and Opportunities

IV. STEWARDSHIP GOALS & MANAGEMENT RECOMMENDATIONS

A. Boundary Posting
B. Invasive species management
C. Outreach to neighbors

V. IMPLEMENTATION SCHEDULE

A. Chart depicting Stewardship Priority Projects, Timeline and Budget
B. Development and Acquisitions Strategies

VI. APPENDICES

APPENDIX A –	List of Selected Flora
APPENDIX B –	List of Selected Fauna
APPENDIX C –	Site Location Map
APPENDIX D –	Orthological Photo Map
APPENDIX E –	Surrounding Open Space Map
APPENDIX F –	Environmental Features Map
APPENDIX G –	Soils Map
APPENDIX H –	Watershed Drainage Map
APPENDIX I –	Trail Map

INTRODUCTION

About the Westchester Land Trust

Founded in 1988 by dedicated residents, Westchester Land Trust (WLT) works together with public and private partners to preserve land in perpetuity, and to protect and enhance the natural resources in our communities. Our conservation work spans both Westchester and eastern Putnam Counties, and the Land Trust has preserved 7,500 acres through accepting the donations of conservation easements, or by accepting or facilitating the donation of parcels of land by the transfer of ownership. WLT's conservation efforts impact the long-term health of our cities, towns and villages through protection of watersheds, public water supply, wildlife, air quality, and local food supply.

Westchester Land Trust has worked to protect properties of high conservation value in Westchester County and eastern Putnam County and to maintain them to the highest standards. To ensure these standards are met, a program of careful planning and sound management is essential.

Significance of Old Church Lane Preserve to WLT's conservation mission

The Old Church Lane Preserve is one of Westchester Land Trust's property holdings with trails, parking, and active programing. The preserve is dedicated to the conservation of its natural resources and is in a key watershed location with significant expanses of open space and undeveloped lands – both protected and otherwise – nearby.

Several factors have guided the planning effort and will continue to inform and determine the active ongoing management of the Old Church Lane Preserve and all of WLT's lands. This framework includes:

First, Westchester Land Trust's mission:

Westchester Land Trust works together with public and private partners to preserve land in perpetuity, and to protect and enhance the natural resources in our communities.

Second, management will support the pertinent initiatives from the list of priorities outlined in Westchester Land Trust's Conservation Plan including the following:

- Protection of water resources, particularly drinking water resources; √
- Protection of wildlife habitats – contiguous (non-fragmented) areas and corridors (connections between habitats); √
- Preservation of land available for passive recreation; √
- Preservation of existing farmland or land that has potential for use as farmland in the future; √
- Preservation of scenic vistas and viewsheds. √

Third, several principles will guide WLT's work at the Old Church Lane Preserve. These guiding principles will be applied when carrying out work at all WLT properties. They are value statements that may also provide a source of criteria for determining goals and recommended actions.

1. Westchester Land Trust will continue to adapt its management based on experience, newly gained knowledge, and available human and financial resources.

2. We consider resource protection to be WLT's fundamental responsibility. Only by protecting the significant resources of our land holdings can we attain our visitor experience goals – a good visitor experience is derived from our preserves being in excellent condition.

3. We will apply the best available management practices to protect and conserve the Old Church Lane Preserve's outstanding features.

4. Successful management of the property relies on sound financial management. To be the best possible stewards of our precious financial and human resources, we nurture a culture of innovation, financial discipline and thriftiness.

5. Through good communication and collaboration, WLT will confirm and strengthen its partnership with the local community, supporters, volunteers, and other conservation partners to achieve its long-term goals for the property. We view ourselves as a community partner, investing in creative initiatives to build shared values, perspectives and skills among diverse constituencies.

Management Planning Guidance

The Westchester Land Trust is entrusted with the responsibility to care for the properties that it owns, and will own forever. The land trust will strive to maintain each property to the highest standard practicable and appropriate to its unique character as catalogued in this comprehensive management plan.

The process of assessing the key attributes of each parcel begins with a detailed description of natural (plant and animal communities), physical (land and water), and cultural (scenic, historical, archaeological) resources comprising its unique character. The work product is a descriptive report, and a listing of recommendations for management tasks that includes a schedule for implementation and a summary of costs. Identified actions necessary to the protection of resources, or to the safety of neighbors or visitors, are given priority.

OLD CHURCH LANE PRESERVE

PROPERTY DESCRIPTION

A. Property Profile -

1. - Parcels: Section-Block-Lot (Acres) – Donor; Date --
45A-9827-69 (30.78 acres) – Open Space Institute, Inc.; 9/9/2003 (Control Number 432250243)

2. – Coordinates: Longitude/Latitude: 73° 31' 54.823"W/41° 14' 3.209"N

3. - Acquisition History Narrative:
The Old Church Lane Preserve was acquired by the Westchester Land Trust from the Open Space Institute (OSI) in September, 2003. The land on which the preserve sits was originally part of a 45 acre lot owned by OSI. The 45 acres was subdivided into three parcels: the 30 acre Old Church Lane Preserve and two smaller parcels to the east (5 and 9.5 acres) that were sold to Putnam Realty and developed for residential purposes. Westchester Land Trust holds a conservation easement (encompassing approximately 8.3 acres) on the two residential parcels created by the subdivision. Sometime between 2004 and 2007 a house was built outside of the conservation easement area on each of the smaller parcels.

The Old Church Lane Preserve is a part of the Siscowit watershed which is part of the drinking water supply system operated by the Aquarion Water Company of Connecticut.

No donation(s) toward stewardship, or property-tax payment, were received. This preserve has no endowment.

A Conservation Easement for Old Church Lane Preserve is held by the Open Space Institute and was donated to our conservation partner by WLT in 2004 (Control No. 440920264 - 4/29/2004).

4. - Directions: Old Church Lane Preserve is located in Lewisboro, New York. To get there from Rte. 35 turn onto Rte. 123, make a right onto Kitchawan Rd., and a left onto Old Church Lane. Just south of the intersection of Kitchawan Rd and Old Church lane there is a small pull-off on the left side of the road for parking.

B. Regional Setting and History

The Old Church Lane Preserve is in the southwestern part of Lewisboro, near the Lewisboro/Pound Ridge border. This comprehensive management plan report describes the 30.78 acres of land along the east side of Old Church Lane that is owned by the Westchester Land Trust. Old Church Lane Preserve is adjacent to the 22,000 acre Eastern Westchester Biotic Corridor, which has been described by local scientists (the Metropolitan Conservation Alliance) as having some of the highest levels of native biodiversity found anywhere in the northeastern United States. In 2004, the Town of Lewisboro and the adjoining municipalities of Pound Ridge and North Salem entered into an inter-municipal agreement to protect the corridor through integrated land-use planning. A portion of the defined corridor was subsequently extended into the Town of Bedford.

While the Old Church Lane Preserve is not technically within the boundaries of the Eastern Westchester Biotic Corridor, its proximity to it (<2000 feet) is notable and suggests that the preserve shares the corridor's characteristic benefit to local biodiversity.

The Old Church Lane Preserve is geographically situated among many undeveloped and/or protected parcels. To the east of the preserve is the 14 acre Open Space Institute conservation easement held by the Westchester Land Trust; directly to the northwest are 23 acres subject to a conservation easement held by the Westchester Land Trust and still further west is the 828 acre Aquarion Water Company land holding, which surrounds Trinity Lake and the Mill River Reservoir. Adjacent to the north, west and south sides of the Aquarion Water Company land are many permanently protected parcels (nature preserves and conservation easements).

The preserve is a mix of dry upland and wet lowland forests with considerable conservation value. Within the preserve is a loop trail and access opportunities for the general public are facilitated by parking on Old Church Lane. The abutting properties are privately owned, although the abutting property to both the east and the northwest are subject to the provisions of a conservation easement held by Westchester Land Trust.

During the Revolutionary War, the population of Westchester was depleted. In 1788, the county was divided into 20 towns. In 1798, the first federal census recorded a population of 24,000, with the primary occupation farming. Extensive farming activity led to increased forest clearing for agriculture. Continued economic and agricultural development in the early 1800s and the arrival of the railroad in the 1830s and 40s resulted in a population of 99,000 by 1860.

With the expansion of railroads and the New York City water system, the population of Westchester County continued to grow. In the late 1800s, manufacturing interests grew, particularly along the Hudson River. During this period, many New York City residents migrated to Westchester County, thus increasing the population and placing greater pressures on the county's landscape and natural ecosystems. By 1920, the population of Westchester County was 350,000. In 2010, the population of Westchester County was 949,113.

Today, many parts of Westchester County remain relatively rural, including large areas within the Town of Lewisboro. In 2010, the population of Lewisboro was 12,411, with a population density of 430 persons per square mile. This compares with a population density of 1,898 persons per square mile in Westchester County as a whole. Open space is a valued commodity locally, and recognized as important to the quality of life of residents as articulated in the Lewisboro Town Master Plan, May 24, 1985.

C. Conservation Values –

1. – Public Recreation and Education:

The Old Church Lane Preserve has the potential for meaningful public recreation and education. There is parking for visitors, and a short, very accessible and easily negotiated loop trail approximately 0.5 miles in length. The preserve is an attraction to birdwatchers, lovers of other wildlife, photographers, botanists and others. The location of the preserve within a water supply watershed, its variety of wooded wetlands and its part of a large undeveloped and protected landscape are all subjects for study and programming.

2. – Natural Features and Habitats:

The Old Church Lane Preserve is located adjacent the Eastern Westchester Biotic Corridor, an open space corridor designated in the 2009 New York Open Space Plan for special preservation. It contains a diversity of plant communities and habitat types most notable of which are the Old Church Lane Preserve's State-designated wetlands.

3. – Open Space and Natural Buffers:

The Old Church Lane Preserve is adjacent to an 8.3 acre, WLT-held easement to the northwest and a 14 acre, WLT-held conservation easement to the east. Significant protected open space parcels are found nearby.

4. – Drinking Water and Surface Water Protection:

The Old Church Lane Preserve is within a public drinking water supply watershed, and also contributes to the protection of surface water quality of downstream lakes and ponds.

SITE CHARACTERISTICS

A. Physical and Natural Resources

1. Climate:

The Westchester County Region is characterized by moderately cold winters and warm summers. The Old Church Lane Preserve is located just far enough from the coastline to be unaffected by the moderating influence of Long Island Sound and the Atlantic Ocean. It is unlikely that the nearby Trinity Lake and other proximate water bodies have a moderating influence on climate conditions affecting mean temperature, depths of snow, and humidity levels. Regional weather data are recorded at the Westchester County Airport. Local weather data is collected and reported through Weather Underground at weather stations in Waccabuc and Goldens Bridge (Westchester County), New York, and in Ridgefield and at the Danbury Airport (Fairfield County), Connecticut.

The average winter temperature is 26 degrees with occasional extreme lows approaching -5 degrees. In summer, temperatures average 84 degrees to 86 degrees with 100 degrees exceeded on occasion. The growing season is approximately 170 – 190 days in length and extends from mid-April to mid-October. Average annual precipitation is 42 - 48 inches including an average – but highly variable – annual snowfall of 35 – 45 inches (10 inches of snow will melt into one inch of water).

The prevailing winds are from the southwest with an average velocity of seven miles-per-hour. Northwesterly winds are frequent during the winter, with the highest average wind speed of 14 miles-per-hour encountered during the month of February. The region experiences two dozen or so thunderstorms each year, the majority of which occur in summer, and a periodic hurricane during the storm season from late summer through early fall. The most recent major hurricane to strike the southeastern New York area was "Bob" during August 1991. The more commonly occurring ice storms, wind storms, and snow storms associated with so-called "nor' easters" are the more consequential weather events affecting the landscape as are tropical storms such as "Irene" in August 2011, "Bob" in October 2011, and "Sandy" in October 2012.

Why look at climate? –

A region's climate, in combination with its topography and underlying geology, has a significant impact on water resources, soils, vegetation patterns, and wildlife.

Precipitation falling on the surface of the land, for example, will return to the atmosphere as water vapor through the processes of evaporation and evapotranspiration (the pumping of water back into the air by plants); will infiltrate or move downward through the soil to the water table as ground water and may re-surface as a spring or seep; or will flow downhill over the surface of the ground as surface-water runoff. This water wets the soils, flows in the streams and rivers, and fills ponds and lakes.

The elements of climate that most affect soil formation are temperature and precipitation. These factors act directly on exposed bedrock and on so-called "parent" material (parent material is the term used to describe the mineral fragments from which different soils develop) resulting from the weathering of bedrock, and indirectly on the various biological populations – bacteria, molds and fungi, lichens, mosses, herbaceous plants, earthworms, and other living organisms – that also modify rocks and minerals.

Temperature influences the indigenous and introduced vegetation, as does water within the soil. Where slopes face to the south or north, the radiant energy of the sun warms and dries the former, and leaves the latter in the cool moist shade. Where slopes face east, the soils tend to stay moist. Where they face west, they tend to be drier.

Within the Old Church Lane Preserve the terrain rises and falls sharply in some place and smoothly in others; the highest elevation of 700′ above mean sea level is found along the rocky slopes in the eastern part of the preserve which drops to an elevation of 595′ above mean sea level in the shrub wetland.

The species of animals that inhabit an area are those that are adapted, or well suited, to deal with its seasons, temperature ranges, availability of water, the chemical and physical nature of its soils, and the food and shelter provided by its plant communities.

While the climate of an area is generally uniform, local variations in the landscape produce singular conditions that give a specific geographical area a distinctive character. The Old Church Lane Preserve exhibits a modest array of these complex microclimates, the most prominent being a contrast between moist lowland habitats and dry upland habitats. These physical conditions affect plant composition, wildlife inhabitants, water quality, and the potential for a variety of uses, management strategies, and conservation initiatives.

2. Geology:

The geology of New York is fascinating because of its diversity. The discussion of a region's geology requires placing the area in both an historical context (time), and in a geographical context (place). Attention may then be directed to documenting, interpreting, and understanding the various features encountered – beginning from the "bottom" or bedrock, and proceeding upwards to the surface. The geological history of the Old Church Lane Preserve spans a period of approximately 1.2 billion - 570 million years, and is encompassed within a geographic region of the state known to geologists as the Hudson Highlands within the Manhattan Prong.

The underlying bedrock within the site is granitic in nature and composed of gneiss and other metamorphic rocks. Generally, the bedrock within the region follows a pattern of long ridges and adjoining valleys trending in the direction of the glaciers that scoured the area repeatedly as they advanced from Canada toward Long Island.

The glaciers had a profound impact on the shape and character of the landscape we see today. Several episodes – at least four and perhaps as many as 10 – of glaciation, advances and retreats of massive sheets of ice more than a quarter-mile thick, have occurred in southeastern New York during the past two million years. The last glacial advance took place between 16,000 and 23,000 years ago.

Twenty thousand years ago, the land comprising the preserve and environs was devoid of plants and animals and buried under a mass of ice more than 1,000 feet in thickness that had extended as far south as Long Island and would persist for thousands of years as warming temperatures slowly melted it back to the north and northwest.

The ice sheets smoothed hills, scoured valleys, and ground and churned rock fragments of all sizes and deposited them in new locations as "glacial till." Rivers of meltwater sorted through much of the material and carried silts and sands down valleys as "outwash"; heavier gravels were left farther upstream and light silts and clays were deposited in the still waters of glacial lakes as deltas. It is important to know that the glaciers did not create the landscape. The basic foundation is the bedrock, and the form of the pre-glacier terrain was created by previous stream erosion of the various types of bedrock with some types more resistant to weathering and erosion than others. The glaciers did, however, move and shape the looser materials that had eroded from high areas and were carried to low areas by moving water and, to a lesser extent by wind.

The glaciers modified the shapes of the hilltops and valleys, and pushed loose material from one place to another. Erosion and deposition are ongoing processes that continue to modify the landscape.

Within a half mile of the preserve there is a significant geological feature. This general area is located within a band of Inwood Marble, a bedrock deposit of calcareous limestone that stretches from the reservoirs in northern Pound Ridge and Vista north to the three lakes area of Lewisboro. When water collects in low areas within areas containing calcareous soil, the wooded wetlands and wet meadows exhibit a unique array of plant communities because the reduced acidity prevents valuable nutrients from leaching from the soil. The resulting growing conditions are more hospitable to flora and fauna than the more typical acidic conditions. Limestone is also associated with the area's major aquifer, the source of drinking water for the bulk of the residents that depend on individual wells. Because of the rich biodiversity found in limestone areas and the important role that limestone plays in filtering drinking water found in aquifers, limestone areas are a conservation priority.

There is no evidence that the low-lying areas of the Old Church Lane Preserve are underlain by limestone, but further investigation would be of interest.

Of significance within the Old Church Lane Preserve is the predominance of a uniform and shallow blanket of glacial till – unsorted materials from silts and sands to gravels and stones – that was pressed into the bedrock by the weight of the ice mass during glaciation. Areas of glacial till are characterized by compacted soils that do not readily hold water.

3. Topography:

One of the important features of an area's topography is the influence that the character of the land has on the flow – both in direction and in speed – of surface and ground water. Water that falls as rain or snow on one side of a hillside is pulled downward by gravity. Water that falls on the other side of the hillside flows in a different direction. The highest points in the landscape are called "divides"; they are the topographic features that divide the falling precipitation. Water may flow over the surface of the ground as runoff, or it may percolate through the underlying sands, silts, gravels, and/or fractured rock and move down slope as ground water. All of the land that directs water to a common outlet point is called a "watershed." The watershed is named after the major surface-water feature that collects and carries the water within it.

The topography of the preserve site ranges from 528 feet to 568 feet above mean sea level and drains into the Mill River/Siscowit reservoir system.

In addition to its significance in forming the visual character of the landscape, and its effect on the direction and rate of water flow, an area's topography is one of the determining factors on vegetation patterns. Slopes are alternately in sun or shadow for varying times of the day depending on their orientation. Southerly facing slopes are exposed to sunlight throughout the day and throughout the seasons, and northerly facing slopes are always in the cool moist shade. Larger trees are subject to damage from ice in winter and from wind-throw during storms funneled through valleys to a greater or lesser extent depending on orientation.

The examination of an area's topography, or its "relief," is an examination of its surface features. The relief of an area is greatly influenced by the underlying bedrock geology. The drainage basins and climate determine hydrology, and the cultural features within the area of interest reflect the history of human uses.

Accordingly, the discussion of topography follows that of Regional Setting, History, Climate, and Geology, and precedes Hydrology, Soils, Vegetation, and Wildlife.

4. Hydrology:

The ridges of the Old Church Lane are intersected by a stream that runs north to south throughout the parcel and a minor watercourse that runs from the eastern boundary into the wetlands, exiting under a stream channel beneath Old Church Lane at the western boundary. Runoff eventually is carried into reservoirs to the south that provide drinking water supplied by the Aquarion Water Company of Connecticut.

Precipitation falling on the surface of the land will return to the atmosphere as water vapor through the processes of evaporation and evapotranspiration; will infiltrate through porous soils and fragmented rock to the water table as groundwater; or will flow downhill over the surface of the ground as surface-water runoff.

Evaporation can be measured directly, but evapotranspiration – the combined loss of water vapor to the atmosphere from evaporation and transpiration (a result of the water-transporting metabolic processes of plant life that may be simply described as growing plants actively pumping water from the ground into the air) cannot. Evapotranspiration rates must be derived from water-budget studies. Generally, however, water loss to the atmosphere from evapotranspiration in southeastern New York is estimated at approximately 21 – 23 inches per year.

Recharge, or infiltration of water through the soil and fractured rock into the water table may range from 7 – 12 inches per year but is highly variable depending upon the type and depth of soil, the slope or steepness of the land, the type and extent of vegetation cover, the intensity of the rainfall, and the weather conditions.

The remaining balance of precipitation will flow over the surface of the ground, pulled downhill by gravity in a direction that is perpendicular to the contour of the land as runoff, and will form streams, rivers, lakes, and ponds. This is the water most readily available for use, and the most susceptible to contamination. Since much of the landscape of the preserve is characterized by moderately to steeply sloping terrain with well-drained and somewhat excessively drained soils, it may be concluded that much more than half of the annual precipitation finds its way into its wetlands and drainage ways as surface runoff. Since land uses within the drainage area(s) are restricted, water quality is protected.

No significant groundwater-recharge sites are found within the preserve due to the nature and glacial-till origin of most of the soils, presence of hardpan, and absence of any extensive deposits of sands and gravels.

5. Soils:

The soils of an area are the consequence of its geological history, its climate, and its topography. In turn, the soils greatly influence the area's hydrology and vegetation, and its suitability for various uses from woodland management and the production of crops, to the siting of houses and roadways.

Soils provide a substrate for plants and a home for many animals. They are the site of much decomposition of organic matter and the reclaiming of the nutrients necessary to the growth of plants. Soils influence water movement and water chemistry, and they are greatly responsible for determining the availability of water within the ecosystem. The composition, depth, water-storage qualities, and stoniness are just some of the qualities of soils that determine the suitability of an area for various uses.

Soils are classified on the basis of the specific combination of the following four factors:

1) The original parent or rock material from which they were derived. Soils develop from the "bottom" or base rock up, not from the top down (even though we look at soils from their surface). Stockbridge marble, for example, is a very different parent material than Bedford gneiss;

2) The climatic conditions that the soils are subject to – especially precipitation and temperature;

3) The living organisms that affect the soil chemically and structurally, and are especially significant in determining its organic content;

4) The length of time that has transpired as formation proceeded from the initial weathering of the parent material.

Mineral soils are formed by the physical, chemical, and biological weathering of primary minerals in the bedrock and overlying glacial deposits. When these soils are derived primarily from material weathered from granitic gneiss they are acidic in nature. When they are derived from limestone and sandstone, they are calcareous in nature. Topography is also an important factor as soils are eroded or washed from the slopes into the bottomlands.

The Old Church Land Preserve has four general associations of mineral soils: Chatfield-Hollis-Rock Outcrop Complex (10%); Charlton - Chatfield Complex (45%); Chatfield- Charlton Complex (5%); and Sun Loam (40%). Chatfield-Hollis soils are shallow, rocky and very dry soils formed in a thin mantle of till derived mainly from gneiss, schist, and granite and are found along the rocky outcroppings at the parcel's northern edge. Chatfield-Charlton soils are moderately deep and very dry formed in till overlying granite, gneiss, or schist bedrock. They occupy the area between the rocky outcroppings at the northern edge. Charlton-Chatfield soils - acidic loamy tills derived from granite, gneiss, or schist bedrock - are found in the parcel's central and eastern portions. Sun Loam soil is very deep and is formed in glacial till derived primarily from limestone and sandstone. The sun soils are found in the two wetlands and the low areas in the center of the parcel and are considered soils of farmland importance.

Note: Soils information, and the identification of wetland areas, provided by government agencies for general information purposes is not a substitute for a detailed identification of soils types by a qualified professional undertaking a comprehensive field survey.

Westchester County's soils have been classified and mapped by the U.S.D.A. Soil Conservation Service in cooperation with the Cornell University Agricultural Experiment Station.

Detailed descriptions and other information about soils may be found at the United States Department of Agriculture Natural Resources Conservation Services website: http://soils.usda.gov/technical/classification/, United States Department of Agriculture Soil Survey of Putnam and Westchester Counties, and Table 8 (New York Soils Hydrologic Groups) listed on the New York and Cornell University Crop and Soil Sciences website: http://nmsp.css.cornell.edu/publications/index.asp

The online resource of choice for site-specific general soils information is the Web Soil Survey found at: http://websoilsurvey.nrcs.usda.gov/app/WebSoilSurvey.aspx.

6. Vegetation:

The "flora" of an area – its inhabitant plant life – consists of the sum total of all of the species of plants that are found within its designated boundaries. Each type of plant, or species, counts equally; relative abundance is of lesser importance. In contrast, the "vegetation" of an area is described in terms of the mosaic – or combination or pattern –of species that dominate a plant community. Less abundant individual species are of limited importance, and may even be ignored.

A cataloguing of the flora lends itself to the production of lists of plants. A description of an area's vegetation lends itself to interpreting the interacting environmental factors that influence a particular site. These environmental factors include temperature, moisture, sunlight, soil type, and influences of resident wildlife. Study of an area's vegetation leads to the formulation of a holistic understanding of the natural systems comprising that bit of the landscape that is the object of the study.

There are nearly 4,000 species of vascular plants in New York State and slightly more than 1,000 species in Westchester County. The compilation of an all-inclusive and definitive list of a specific area's plants would, of necessity, be an ongoing task spanning each season and every year; the investigator would have an ever-changing catalogue of plant life. (Learn more about the cataloguing on New York's plant life by linking to the New York Flora Atlas project - http://newyork.plantatlas.usf.edu/.)

A description of an area's vegetation, in contrast, provides a measure by which the history of an area can be inferred, and the future anticipated. A look at species composition and distribution within one area provides a means of comparison with other areas.

The specific plant communities, or associations of different plants that grow together in a particular area, are the consequence of a variety of factors that include the following:

Physical factors – resulting from wind, available light, seasonal temperatures, moisture, available nutrients, soil structure, chemistry, and drainage;

Biological factors – such as disease and the impact of wildlife;

Cultural factors – resulting from human uses and activities.

The vegetation of an area is not only the consequence of these and other factors, it is a readily visible indication of what conditions are like within that area. For example, early settlers often looked for lands vegetated with moist-forest trees such as beech, hickory, and ash as an indication of rich soils that would be ideal for agricultural. A red maple community indicates poor drainage and swamp conditions. Oaks grow in areas where the soils are drier, well drained, and often nutrient poor. Hemlock and beech will be found in areas that have been free of fire since both species are particularly susceptible to damage because of shallow root systems and thin bark.

Diseases such as the chestnut blight, and now ash wilt, have dramatic effects on an area's vegetation as does insect damage from pests such as the gypsy moth, wooly adelgid, and emerald ash borer. Browsing deer can change the composition of species over time as choice food plants are eaten repeatedly giving less palatable plants an advantage. Beaver can have a dramatic effect on vegetation as they change drainage conditions when they dam watercourses to create shallow impoundments, and gnaw down trees for food and building materials. Non-native earthworms quickly recycle organic material within woodlands releasing excess nutrients, and some species of invasive plants either change soil chemistry (autumn olive), or exude compounds that inhibit the growth of other plants (garlic mustard), or both (Japanese Stiltgrass).

Another reason to look at vegetation is because the type of plant community present – woodland, marsh, swamp, etc. – is an indication of the type of wildlife that may inhabit that area. Ecologists define habitat on the basis of the plant community, and can infer much about resident wildlife by looking at the plants.

The vegetation of an area may be described in a variety of ways:

The vegetation may be described in terms of Forest Cover Types such as mixed hardwoods (no fewer than 60 percent hardwoods); swamp hardwoods (hardwood species found on sites underlain by poorly drained soils); mixed conifers-hardwoods (at least 60 percent conifers); stands (dominated by one species such as hemlock, beech, pine, or cedar); plantations (a managed monoculture such as a Christmas tree plantation); regeneration area (woodland areas that have been cut, or fields that have been abandoned); and fields (where pasturing, mowing, or other management practices restrict the regeneration of woody plants).

Alternatively, the vegetation of a site may be described in terms of the structure of the community – tree canopy, shrub layer or understory, and herbaceous layer or ground cover – and its position on the land – crest or ridge top, mid slope, lower slope/cove,
or swamplands/bottomlands.

Arial photographs of the Old Church Lane Preserve reveal second growth woodland surrounding an open wetland in the northwest section and a forested wetland corridor running north-south through the center of the parcel.

The preserve's vegetation follows a topographic gradient and is made up of upland mixed hardwoods (uplands) and swamp hardwoods (lowlands). The woodlands include a rich variety of tree species, but a limited distribution of age classes; a young age class (1-30 years old) is generally missing among the trees. The tree canopy varies from closed and shady in most areas to partially open and sunny in the western wetland. The understory is sparse in most of the western portion but is very dense in the eastern portion where thickets of mountain laurel dominate.

The southwest portion of the property is dominated by oaks including chestnut, black and white oak with black birch as an associate species. One large white oak is at least three feet in diameter and the sole white pine on the parcel is located here. It is at least five feet in diameter with what may be a raptor nest located against the trunk approximately thirty feet off the ground.

The understory is sparse. Deer rubs on saplings indicating the presence of white tail deer which account for the lack of understory. White pine seedlings are numerous, moderately shade tolerant and show no evidence of deer browse. All this indicates that a cohort of white pine will inherit this small corner of the parcel.

A. Open Wetland- A New York State Wetland The open wetland in the northwest corner of the parcel exhibits an open canopy. Ample sunshine allows sweet pepperbush, high-bush blueberry, winterberry, swamp azalea, willows, alders and viburnums to flourish here. At the northern edge of the wetland is a large, three foot diameter black oak. Basal scars indicate that this area may have once been logged. Large droppings indicate that raptors use the branches for perching. The preserve's only hemlock tree is here but with a thinning canopy is showing signs of infestation by the hemlock wooly adelgid.

B. Riverine wetland- A New York State Wetland This wetland is a mix of red maple, white ash (possibility of some black ash), tulip poplar and yellow. Most trees are relatively young, approximately 18 inches in diameter and fifty to seventy feet in height. The exception are several impressive tulip poplars, some of which are nearly three feet in diameter and nearly ninety feet tall. Gaps in the canopy are the result of several downed oak trees, probably victims of the October 2011 snowfall that weighed down on the still-attached oak leaves. This wetland may serve as breeding areas for wood frogs, spring peepers, tree frogs and spotted salamanders.

C. Dry upland forest Rising from both wetlands are upland woodlands that dominate the southwest, center and eastern edge of the property. This is a high-diversity forest with white, red, black and chestnut oak, sassafras, American beech, black birch, serviceberry, mountain laurel, tulip poplar, American elm, shagbark hickory, pignut hickory, flowering dogwood, red maple, white ash and muscle-wood. This diversity is not heterogeneously distributed across the preserve. Alternatively, pockets of individual species (or associations) can be found. The understory is primarily made up of serviceberry, witch hazel and mountain laurel. A lone, dead red cedar may indicate that this area was open pasture at one time.

E. Invasive plants Fortunately, the Old Church Lane Preserve has mostly small/newly established patches of invasive plants. This differs from many other forested parcels in northeast Westchester County. Japanese barberry and Asiatic bittersweet only grow in a small handful of easy-to-access places and can be easily removed. Phragmites grows along Old Church Lane (along with multiflora rose) and in the southern portion of the shrub wetland. Silt grass may be present in the preserve in two locations and further field investigations will confirm its presence and absence.

In most instances at the preserve invasive plant control should be prioritized because of the general ease with which they can be handled and the relatively large impact of early control efforts.

7. Wildlife:

Most of an area's wildlife inhabitants are visible only to the frequent visitor and patient observer, if they are visible at all. The compiling of a complete inventory of the fauna of a site is an endeavor that will never be completed with certainty. Just as changes in the time of day and the seasons of the year bring animals to an area, change in the nature of the area itself over time is an ongoing and sometimes unpredictable process. As the habitats change, some species will move elsewhere – just as new species will move in. It is a dynamic process worthy of careful long-term study.

A study of an area's wildlife begins with a cataloguing of its habitat types through aerial-photo interpretation and field visits. Since many species are habitat limited, the identification of a site's habitats helps narrow the possibilities; the investigator would not search for bobolinks, for example, if no meadowlands were found within or near the site.

Existing information may be available from a variety of sources including local universities, area nature centers and naturalist clubs; the pertinent divisions of State and Federal agencies; species-atlas projects; and historical records of sightings. Field techniques include trapping mammals, hair/fur snares, direct observation of the animals themselves by sight and sounds, or the indirect observation of the animals by signs such as tracks, scats, or pellets. Birds are most readily catalogued during the active nesting season.

"Speculative" animals are not to be forgotten. Within the Old Church Lane Preserve, for example, one might speculate on the presence of mammals such as bobcat and fisher.

The more time spent searching, the more complete the survey of resident and transient wildlife will be. The diversity of the fauna is the consequence of the diversity of the vegetation communities, the readily availability of water, and the character of surrounding lands. A list of observed and anticipated wildlife species is found in Appendix 2.

A. Mammals - Gray squirrels, eastern chipmunks, white-tailed deer, raccoons, deer mice, and coyotes are likely to be the most commonly observed mammals within the preserve. Deer are especially abundant as evidenced by numerous well-worn trails, bedding areas and abundant droppings. The wooded swamp bottomlands environment may be home for mink while the larger, cavity prone trees may support southern flying squirrel. Existing mammal populations are well represented by species that would be considered common and readily observed within northern Westchester County.

B. Birds – The Old Church Lane Preserve contains both upland and lowland wooded habitats and most likely supports a variety of bird species associated with these habitats. The shrubs found in the western, open wetland may provide cover and/or food to migrating and/or nesting songbirds, while the closed canopy forests are likely to support a large host of forest birds (woodpeckers, raptors, songbirds and turkey).

C. Reptiles and Amphibians - Many reptile and amphibian species require both wetland and upland habitats for breeding and non-breeding activities. It is likely that wood frogs, spring peepers, spotted salamander, eastern garter snake, American toad and wood turtles live in the Old Church Lane Preserve.

B. Cultural and Historical Resources –

The cultural resources of a site include archeological features – rock shelters, middens, camps and other evidence of use by Native Americans, foundations of houses and outbuildings, farm dumps, wells and root cellars/stone chambers, livestock pens, and stone walls.

The are no notable cultural resources within the preserve with two exceptions: a stone wall and an old engine. The stone wall was constructed by early settlers looking to clear fields for agriculture and corral their livestock. Stone walls have been likened to "archeological ruins", a term often attributed to geologist and University of Connecticut professor Robert Thorson. This old stone wall, built as pasture boundaries and to mark property lines, date back 150 years or more and are preserved within the woodlands and along the fringes of wetland areas. Stone structures and remnant foundations are found nearby on adjoining properties.

A large metal engine found on the trail north of the shrub wetland

C. Threats, Issues and Opportunities –

The Old Church Lane Preserve is generally free from purposeful encroachments such as the dumping of yard debris from the adjoining residential properties. However, possible lawn/yard encroachment is possible as the preserve directly abuts multiple residential parcels and an active roadway. Easy access from the roadway could invite random dumping.

The Old Church Lane Preserve helps to tie together parts of an undeveloped landscape; the preserve is situated between a small conservation easement to the east and another conservation easement to the northwest, which in turn lies adjacent to a large intact forested property surrounding Trinity Lake (Aquarion Water Company of Connecticut, 828 acres). Large swaths of undeveloped land provide habitat for wildlife with high area requirements and ecological process that occur at large spatial scales. The placement of the Old Church Lane Preserve among this connected landscape gives the Westchester Land Trust the opportunity to positively influence large scale conservation.

STEWARDSHIPS GOALS AND MANAGEMENT RECOMENDATIONS

The Old Church Lane Preserve is owned by the Westchester Land Trust and is managed for habitat protection, wildlife-conservation, water quality protection, recreation and scenic purposes. The dominant features of the landscape of note are two wooded wetlands and a diverse hardwood forest. A 0.5-mile trail offers access to visitors.

The following stewardship goals and management recommendations address seven categories (A – C) as listed in the Table of Contents:

A. - Posting of perimeter boundaries, which have not been surveyed, proximate to the property lines. There are key property lines shared with abutting residential properties that need identification and posting. While there have been no boundary disputes with the owners of these properties to date, ownership(s) will change over time. *High priority - $2,000 for approximate boundary. Cost will be more substantial should the services of a professional land surveyor be required.*

B. - Measures to control the spread of invasive plants through purposeful and intelligent containment and removal. Many instances of invasive plants on Old Church Lane Preserve are newly established and/or easily removed; luckily colonization by most invasive plants is minimal, making their control all the more important.

Along Old Church Lane (the western most side of the preserve), multiflora rose, Asiatic bittersweet and phragmites dominate multiple sections of a 100-foot stretch. The bittersweet vines can easily be cut but permanent removal of the phragmites and rose may be difficult because of its proximity to the road and its associated disturbances. *Moderate priority – $800.*

Two small clumps of phragmites are present in the southern part of the shrub wetland and can be cut in the summer. *High priorty – $800 for cutting and cover plantings such as climbing boneset.*

A small clump of Japanese barberry and multiflora rose are present at the location where the foot trail crosses the northern end of the riverine wetland. These shrubs are small enough to remove by hand. *High priorty – $800 for cutting and cover plantings such as winterberry.*

Japanese siltgrass was preliminarily identified along the creek that flows into the preserve from the north (winter identification was inconclusive). A visual confirmation will be made during the growing season and in the event of positive identification an eradication plan will be put into place to stop the further spread of stiltgrass into the preserve.
High priorty – $800 for cutting and cover plantings as appropriate.

Dumping by a neighbor (along with associated siltgrass introduction) might be occurring at one location on the western border of the preserve. Winter evidence was inconclusive and will be revisited during the growing season. If occurring, dumping will be addressed and, if identified, stiltgrass will be eradicated. *High priority – summer 2014.*

C. - Outreach to owners of adjoining and proximate private properties to foster support and awareness of the value of protected lands dedicated to conservation purposes, and to engender a conservation/stewardship ethic. *High priority – ongoing.*

IMPLEMENTATION SCHEDULE

A. Chart Depicting Stewardship Priority Projects, Timeline and Budget
Intentionally left blank …..

B. Development and Funding Strategies
Intentionally left blank …..

Appendix - 1: List of Flora

Trees
red maple *Acer rubrum*
sugar maple *Acer saccharum*
serviceberry *Amelanchier arborea*
black birch *Betula lenta*
gray birch *Betula populifolia*
yellow birch *Betula alleghaniensis*
ironwood *Carpinus caroliniana*
pignut hickory *Carya glabra*
shagbark hickory *Carya ovata*
flowering dogwood *Cornus florida*
American beech *Fagus grandifolia*
white ash *Fraxinus americana*
eastern red cedar *juniperus virginiana*
tulip tree *Liriodendron tulipifera*
white pine *Pinus strobus*
white oak *Quercus alba*
red oak *Quercus rubra*
black oak *Quercus velutina*
willows *Salix spp.*
sassafras *Sassafras albidum*
hemlock *Tsuga canadensis*

Shrubs
sweet pepperbush *Clethra alnifolia*
witch-hazel *Hamamelis virginiana*
spicebush *Lindera benzoin*
maleberry *Lyonia ligustrina*
honeysuckle *Lonicera* spp.
highbush blueberry *Vaccinium corymbosum*
arrowood viburnum *Viburnum recognitum*
nannyberry *Viburnum lentago*
speckled alder *Alnus rugosa*
mountain laurel *Kalmia latifolia*
Japanese barberry *Berberis thunbergii*
multiflora rose *Rosa multiflora*

Grasses and forbs
sedges *Carex* spp.
tussock sedge *Carex stricta*
sensitive fern *Onoclea sensibilis*
cinnamon fern *Osmunda cinnamomea*
common reed *Phragmites australis*
christmas fern *Polystichum*
sphagnum moss *Sphagnum* spp.
skunk cabbage S*ymplocarpus foetidus*

Vines
poison ivy *Rhus radicans*
wild grape *Vitis* spp.
Asiatic bittersweet *Celastrus orbiculatus*

Appendix – 2: List of Select Fauna

Mammals-expected to be observed
eastern chipmunk *Tamias striatus*
gray squirrel *Sciurus carolinensis*
southern flying squirrel *Glaucomys volans*
white-footed mouse *Peromyscus leucopus*
raccoon *Procyon lotor*
mink *Mustela vison*
white-tailed deer *Odocoileus virginianus*

Birds-expected to be observed
wild turkey *Meleagris gallopavo*
red-tailed hawk *Buteo jamaicensis*
red shouldered hawk *Buteo lineatus*
great horned owl *Bubo virginianus*
common flicker *Colaptes auratus*
red-bellied woodpecker *Melanerpes carolinus*
downy woodpecker *Picoides pubescens*
eastern phoebe *Sayornis phoebe*
eastern wood pewee *Contopus virens*
American crow *Corvus brachyrhynchos*
blue jay *Cyanocitta cristata*
black-capped chickadee *Parus atricapillus*
tufted titmouse *Parus bicolor*
white-breasted nuthatch *Sitta carolinensis*
brown creeper *Certhia americana*
carolina wren *Thryothorus ludovicianus*
wood thrush *Hylocichla mustelina*
gray catbird *Dumetella carolinensis*
American robin *Turdus migratorius*
veery *Catharus fuecescens*
cedar waxwing *Bombycilla cedrorum*
European starling *Sturnus vulgaris*
warbling Vireo *Vireo gilvus*
red-eyed vireo *Vireo olivaceous*
black and white warbler *Mniotilta varia*
yellow warbler *Dendroica petechia*
chestnut-sided warbler *Dendroica pensylvanica*
ovenbird *Seiurus aurocapillus*
American redstart *Setophaga rutcilla*
common yellowthroat *Geothlypis trichas*
red-winged blackbird *Agelaius phoeniceus*
common grackle *Quiscalus quiscula*
scarlet tanager *Piranga olivacea*
northern cardinal *Cardinalis cardinalis*
rose-breasted grosbeak *Pheucticus ludovicianus*
house finch *Carpodacus mexicanus*
American goldfinch *Cardeulis tristis*
chipping sparrow *Spizella passerina*
song sparrow *Melospiza melodia*

Amphibians and Reptiles-expected to be observed
American toad *Bufo americanus*
spring peeper *Hyla crucifer*
green frog *Ranas clamitans*
wood frog *Rana sylvatica*
eastern garter snake *Thamnophis sirtalis*

SITE LOCATION

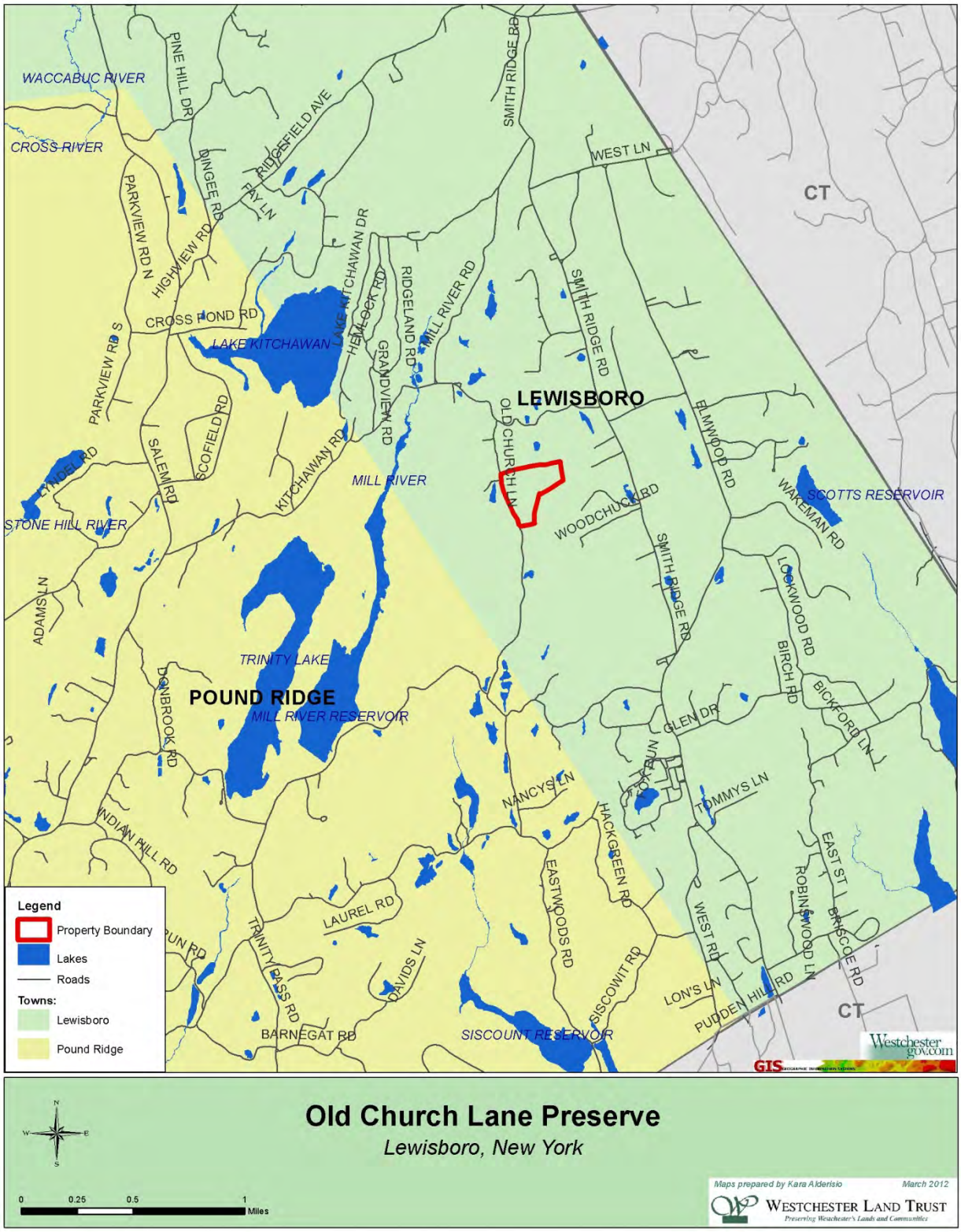

Old Church Lane Preserve

Lewisboro, New York

0 0.25 0.5 1 Miles

Maps prepared by Kara Alderisio March 2012

WESTCHESTER LAND TRUST
Preserving Westchester's Lands and Communities

2009 ORTHOLOGICAL PHOTO

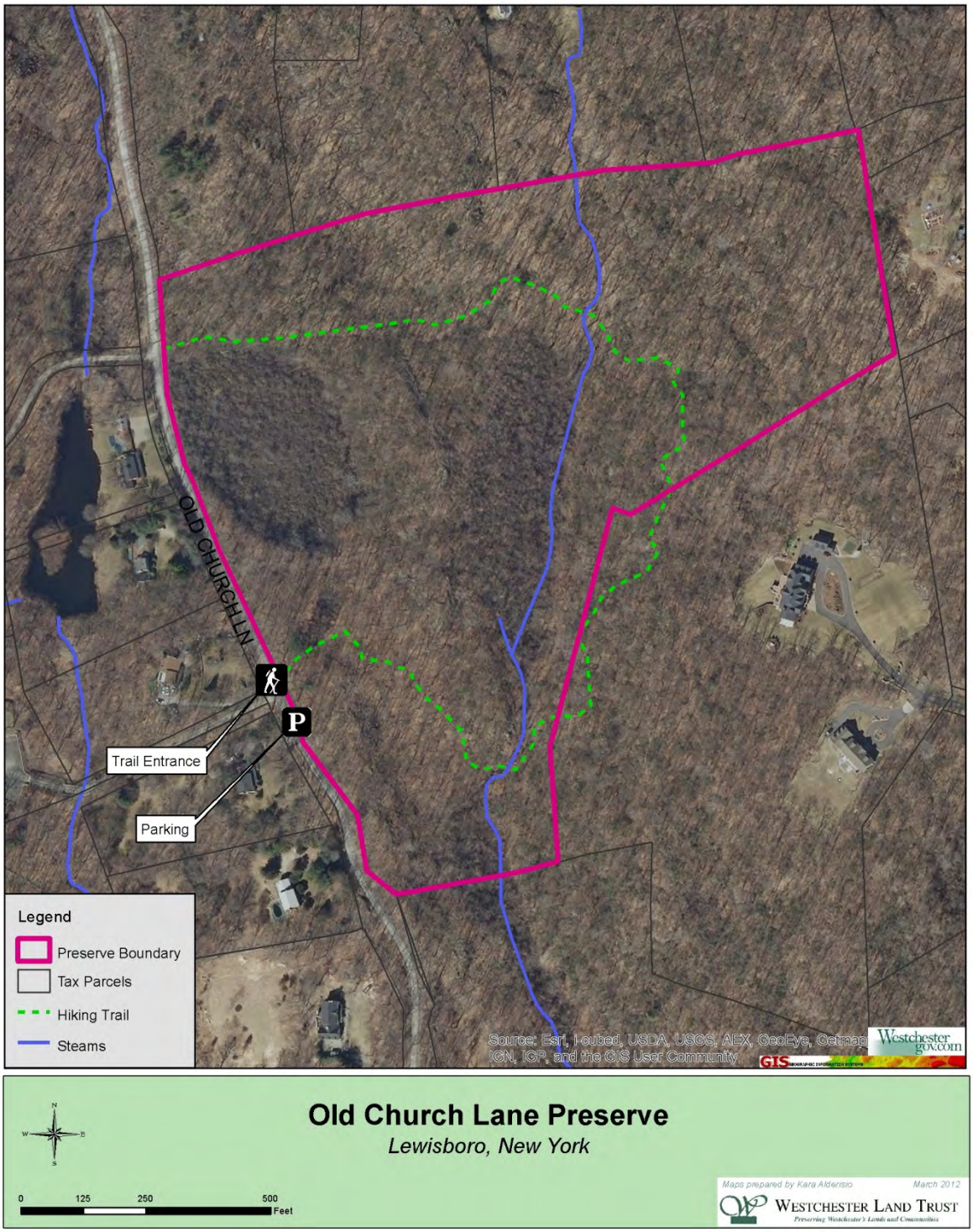

SURROUNDING OPEN SPACE

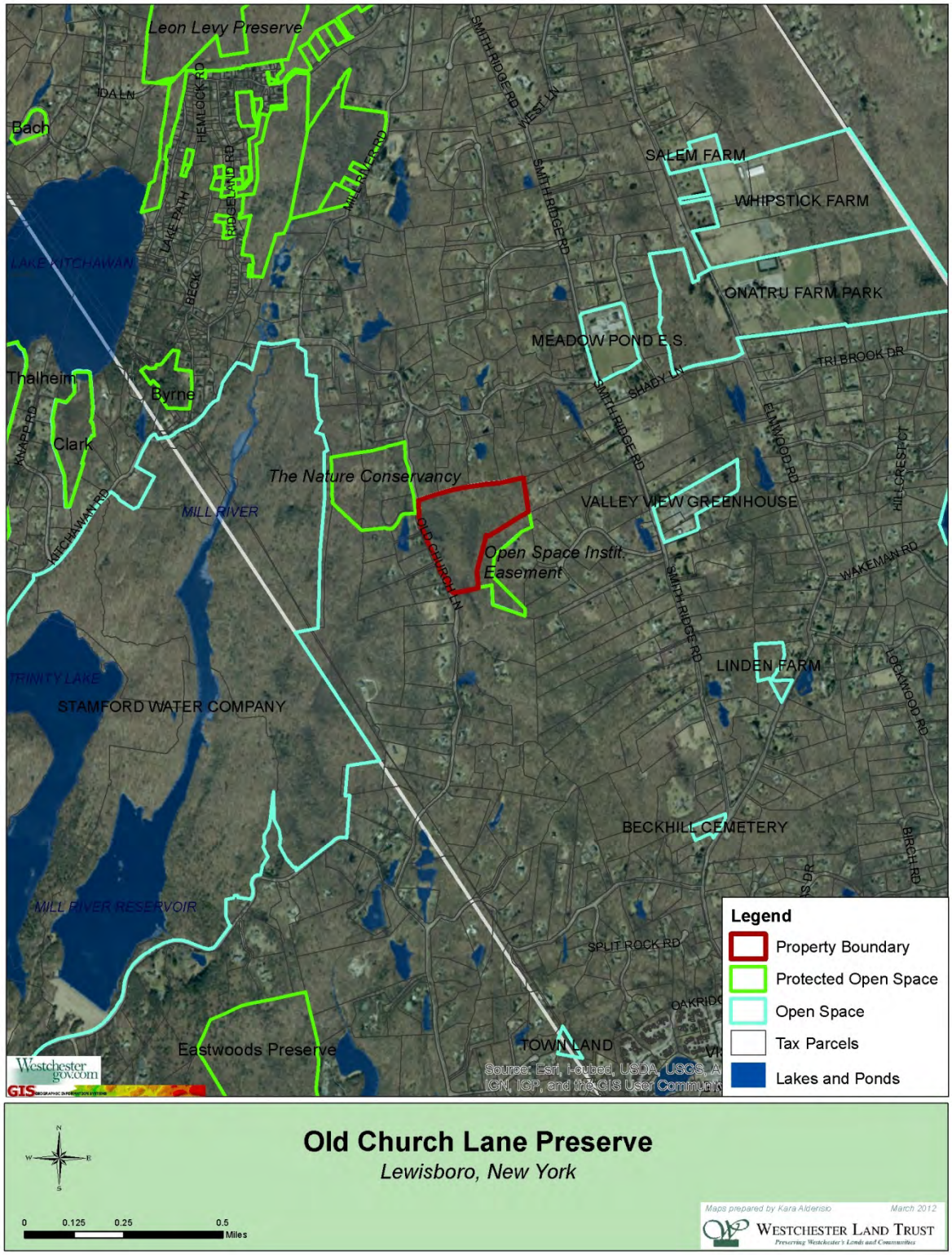

Old Church Lane Preserve

Lewisboro, New York

0 0.125 0.25 0.5 Miles

Maps prepared by Kara Alderisio March 2012

WESTCHESTER LAND TRUST
Preserving Westchester's Lands and Communities

ENVIRONMENTAL FEATURES

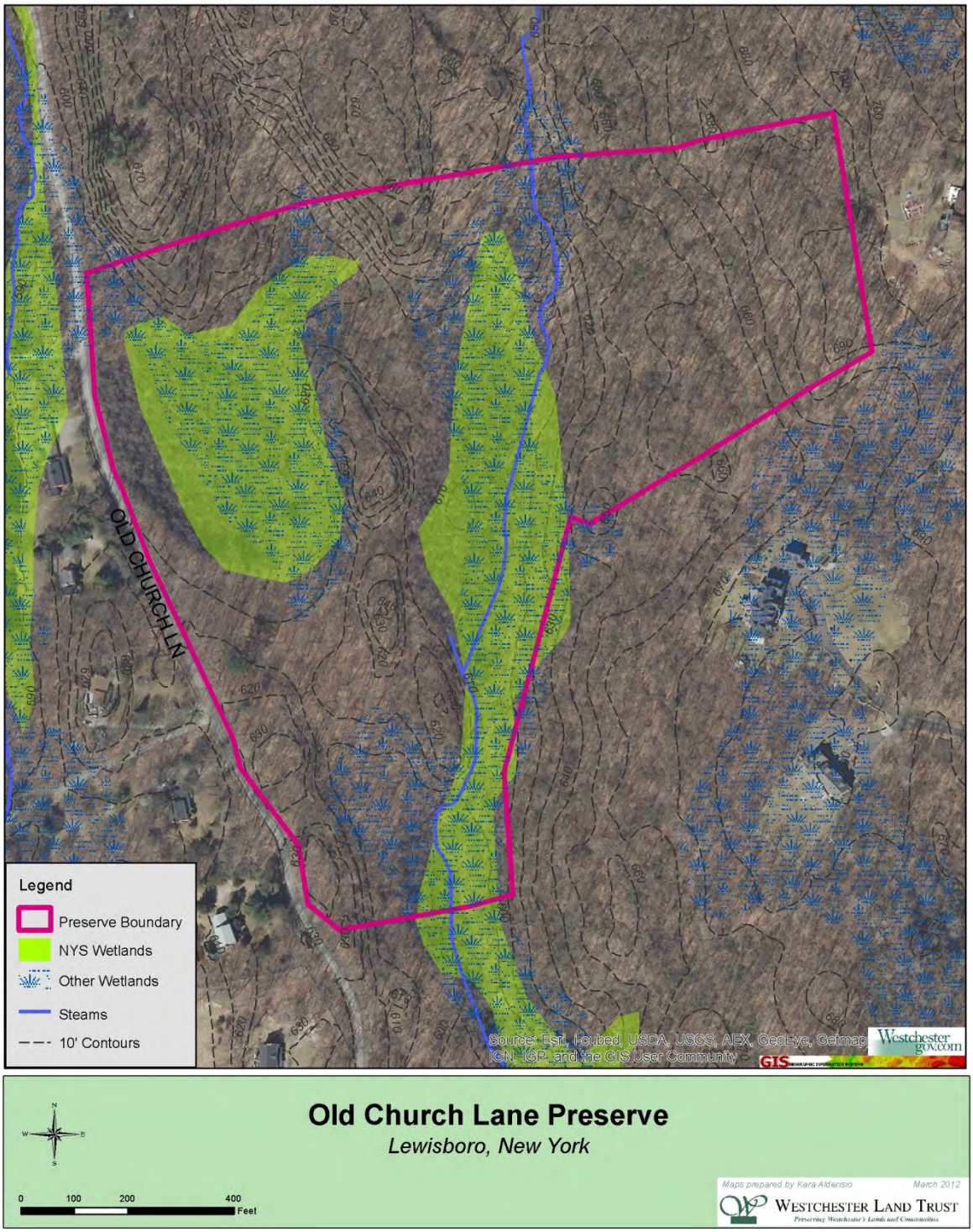

SOILS

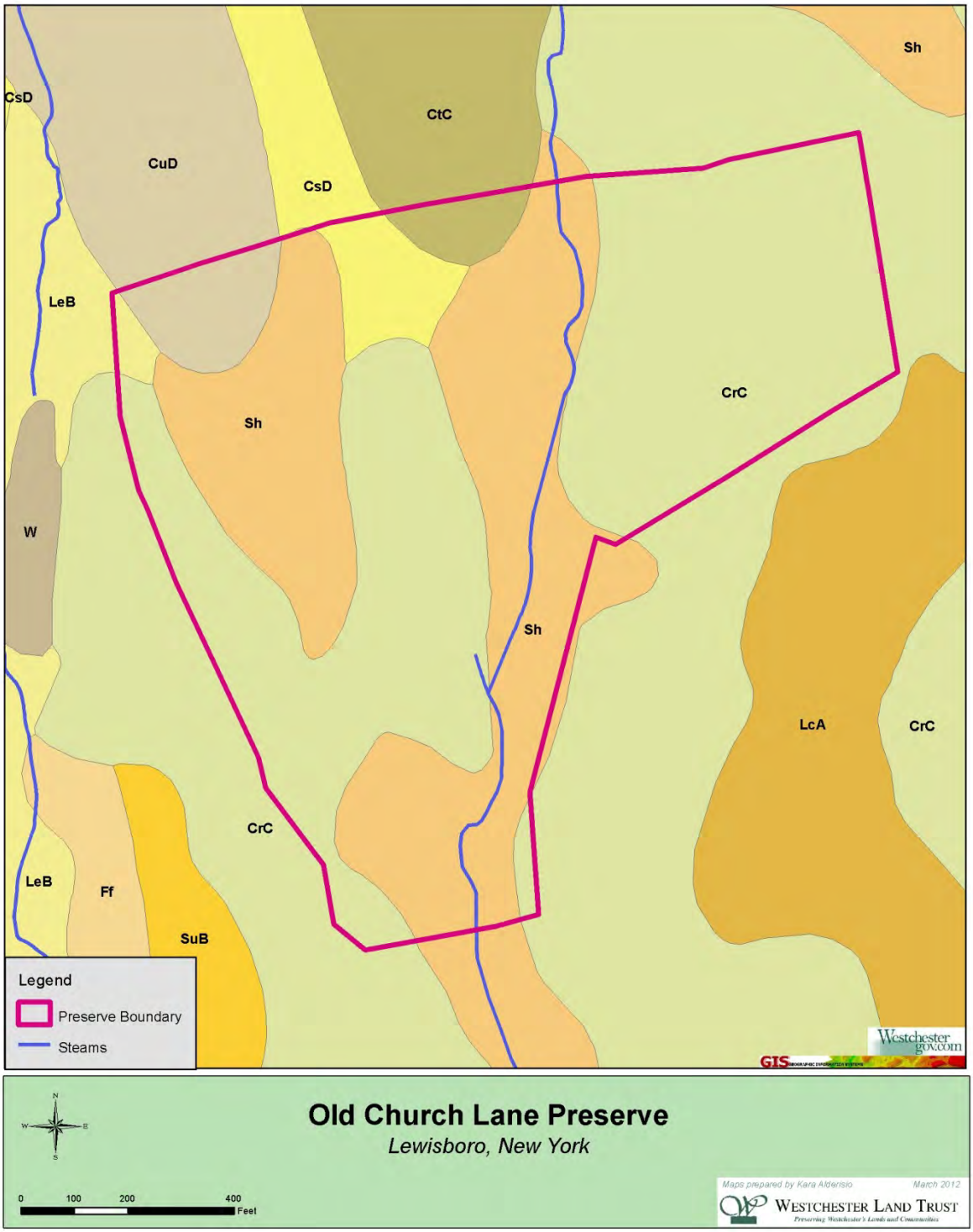
CsD
CuD
CtC
CsD
Sh
LeB
CrC
Sh
W
Sh
LcA
CrC
CrC
LeB
Ff
SuB
Legend
Preserve Boundary
Steams
Westchester gov.com
GIS
Old Church Lane Preserve
Lewisboro, New York
N
W
E
S
0
100
200
400
Feet
Maps prepared by Kara Alderisio
March 2012
WESTCHESTER LAND TRUST
Preserving Westchester's Lands and Communities

WATERSHED BASINS

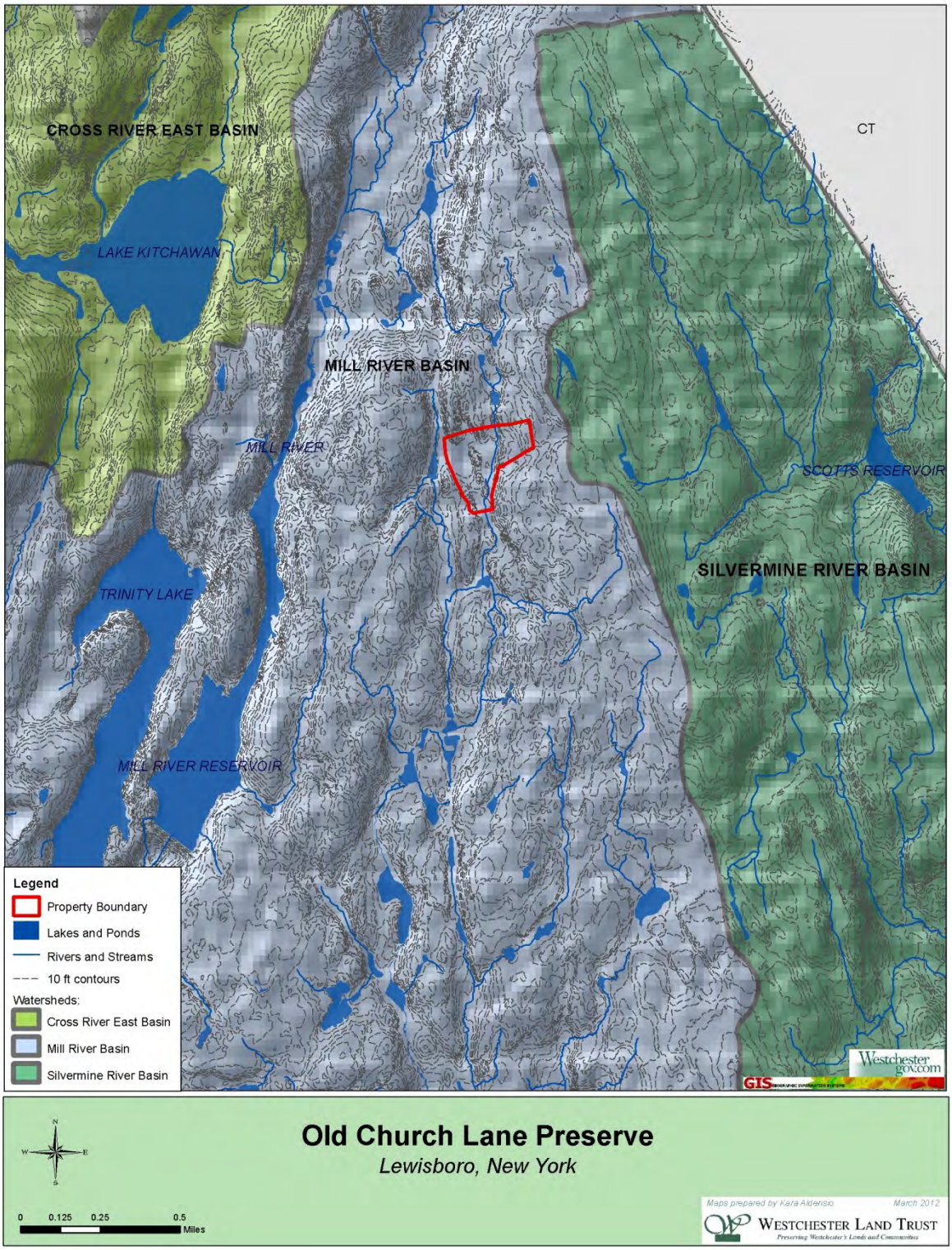

TRAIL MAP

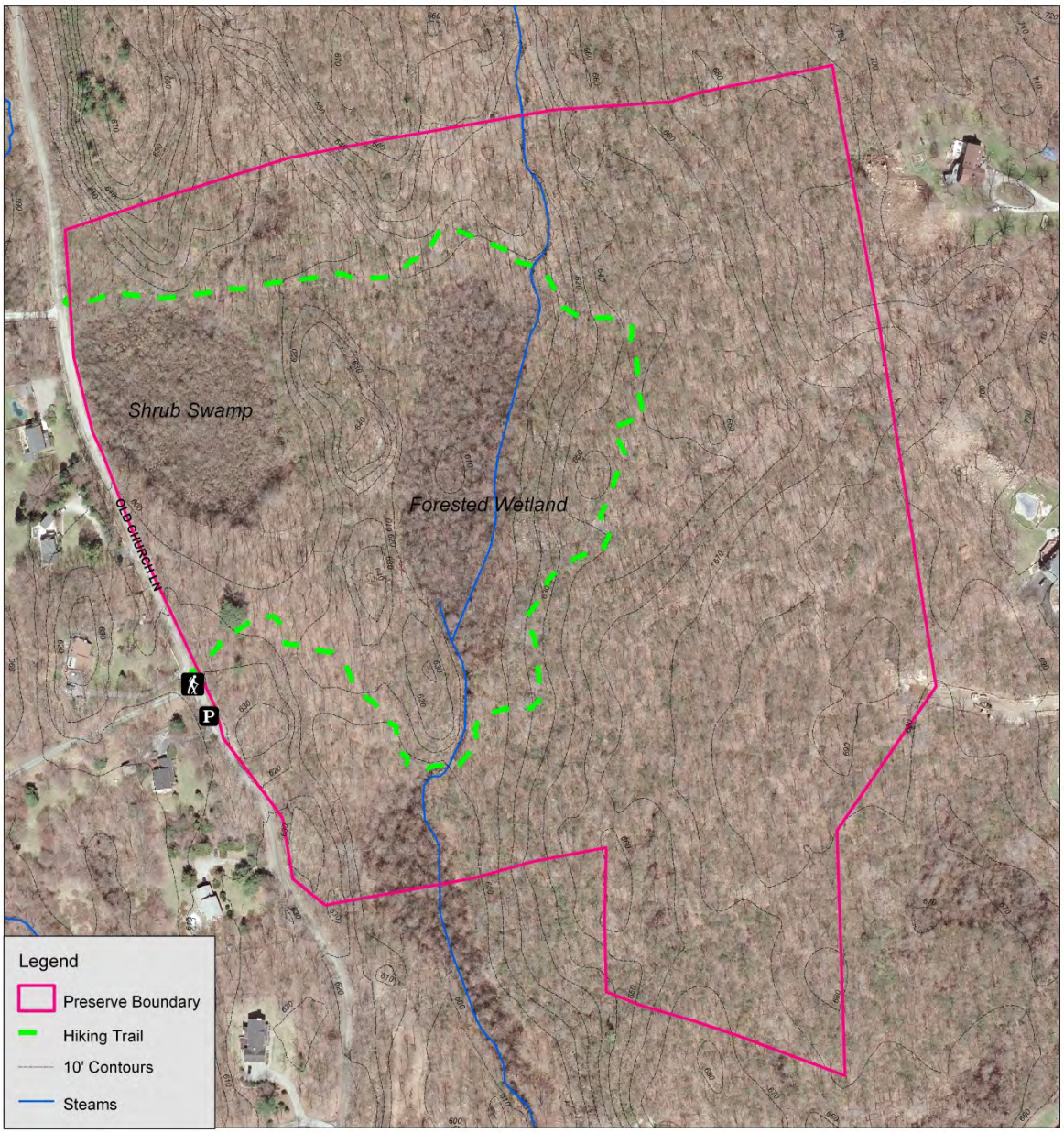

N
W E
S

Prepared by
Kara Alderisio
August 2008

0 95 190 380 Feet

Old Church Lane Preserve

WESTCHESTER LAND TRUST

TOWN OF LEWISBORO

NOTICE OF PUBLIC HEARING

NOTICE IS HEREBY GIVEN that the Planning Board of the Town of Lewisboro, Westchester County, New York will convene a Public Hearing on December 20, 2016 at 7:30 p.m., or soon thereafter, at the Town Offices @ Orchard Square Plaza, Lower Level, Cross River, New York, regarding the following:

Cal# 3-13PB and Cal# 03-16WP

Applications for Preliminary Subdivision Plat Approval and Wetland Activity Permit Approval for Silvermine Preserve, Silvermine Drive and Lockwood Road, South Salem, New York, owners of record, Ridgeview Designer Builders, Inc. & Daniel Higgins, to permit the construction of a 13-lot cluster subdivision. The property is located between Silvermine Drive and Lockwood Road, consists of approximately 58 acres of land, and is located within the Town's R-2A Zoning District. A copy of materials and proposed site documents may be inspected at the office of the Planning Board Secretary, 20 Orchard Square, Suite L, Cross River, New York during regular Planning Board hours. Persons wishing to object to the application should file a notice of objection with the Planning Board together with a statement of the grounds of objection prior to the closing of the Public Hearing. All interested parties are encouraged to attend the Public Hearing and all will be provided an opportunity to be heard.

PLANNING BOARD
TOWN OF LEWISBORO
By: Jerome Kerner
Chairman

Dated November 21, 2016

The Town of Lewisboro is committed to equal access for all citizens. Anyone needing accommodations to attend or participate in this meeting is encouraged to notify the Secretary to the Planning Board in advance.

AFFIDAVIT OF PUBLIC HEARING NOTICE

IN THE MATTER OF APPLICATIONS FOR PRELIMINARY SUBDIVISION PLAT APPROVAL AND WETLAND ACTIVITY PERMIT APPROVAL FOR SILVERMINE PRESERVE, SILVERMINE DRIVE AND LOCKWOOD ROAD, SOUTH SALEM, NEW YORK, OWNERS OF RECORD, RIDGEVIEW DESIGNER BUILDERS, INC. & DANIEL HIGGINS, TO PERMIT THE CONSTRUCTION OF A 13-LOT CLUSTER SUBDIVISION. THE PROPERTY IS LOCATED BETWEEN SILVERMINE DRIVE AND LOCKWOOD ROAD, CONSISTS OF APPROXIMATELY 58 ACRES OF LAND, AND IS LOCATED WITHIN THE TOWN'S R-2A ZONING DISTRICT. THE PROPERTY IS DESIGNATED ON THE TAX MAP AS SHEET 48, BLOCK 10057, LOT 15 AND SHEET 48, BLOCK 10057, LOT 104.

STATE OF CONNECTICUT ss: Bethany

COUNTY OF NEW HAVEN

ELIZABETH EVANS, being duly sworn says that on November 21, 2016, I notified the neighbors as defined to me by the Tax Assessor's Office, via Certified Return Receipt U.S. Mail, noticing the December 20, 2016 Planning Board Public Hearing.

Sworn before me this 29th

Day of November, 2016.

Nancy A. McCarthy

Notary Public

My Commission Expires Feb. 28, 2017

Elizabeth Evans

AFFIDAVIT OF PUBLIC HEARING NOTICE

IN THE MATTER OF APPLICATIONS FOR PRELIMINARY SUBDIVISION PLAT APPROVAL AND WETLAND ACTIVITY PERMIT APPROVAL FOR SILVERMINE PRESERVE, SILVERMINE DRIVE AND LOCKWOOD ROAD, SOUTH SALEM, NEW YORK, OWNERS OF RECORD, RIDGEVIEW DESIGNER BUILDERS, INC. & DANIEL HIGGINS, TO PERMIT THE CONSTRUCTION OF A 13-LOT CLUSTER SUBDIVISION. THE PROPERTY IS LOCATED BETWEEN SILVERMINE DRIVE AND LOCKWOOD ROAD, CONSISTS OF APPROXIMATELY 58 ACRES OF LAND, AND IS LOCATED WITHIN THE TOWN'S R-2A ZONING DISTRICT. THE PROPERTY IS DESIGNATED ON THE TAX MAP AS SHEET 48, BLOCK 10057, LOT 15 AND SHEET 48, BLOCK 10057, LOT 104.

STATE OF CONNECTICUT

COUNTY OF NEW HAVEN, SS: Bethany

EVA SZIGETI, being duly sworn says that on December 1, 2016, ~~I~~ she (SS) notified the neighbors as defined to me by the Tax Assessor's Office, via Certified Return Receipt U.S. Mail, noticing the December 20, 2016 Planning Board Public Hearing.

Sworn before me this 1st

Day of DEC, , 2016.

Hertha B. Russell
Hertha B. Russell
Notary Public

Eva Szigeti

HERTHA B. RUSSELL NOTARY PUBLIC CONNECTICUT

7002 3150 0003 9538 3636

U.S. Postal Service™
CERTIFIED MAIL™ RECEIPT
(Domestic Mail Only; No Insurance Coverage Provided)

For delivery information visit our website at www.usps.com®

SOUTH SALEM, NY 10590 OFFICIAL USE

Postage	$3.30	0525 10
Certified Fee	$2.70	
Return Reciept Fee (Endorsement Required)	$0.00	
Restricted Delivery Fee (Endorsement Required)	$0.00	
Total Postage & Fees	$0.47 $6.47	12/01/2016

Postmark Here

DEC - 1 2016 USPS

Sent To
Street, Apt. or PO Box
City, State,

KELVIN CHONG AND GRACE DAN JIN
7 RESERVOIR ROAD
SOUTH SALEM, NY 10590

PS Form 3800, June 2002 See Reverse for Instructions

7002 3150 0003 9538 3643

U.S. Postal Service™
CERTIFIED MAIL™ RECEIPT
(Domestic Mail Only; No Insurance Coverage Provided)

For delivery information visit our website at www.usps.com®

SOUTH SALEM, NY 10590 OFFICIAL USE

Postage	$3.30	0525 10
Certified Fee	$2.70	
Return Reciept Fee (Endorsement Required)	$0.00	
Restricted Delivery Fee (Endorsement Required)	$0.00	
Total Postage & Fees	$0.47 $6.47	12/01/2016

Postmark Here

DEC - 1 2016 USPS

Sent To
Street, Apt. or PO Box
City, State,

RAYMOND AND STEPHANIE D'URSO
107 LOCKWOOD RD
SOUTH SALEM, NY 10590

PS Form 3800, June 2002 See Reverse for Instructions

7002 3150 0003 9538 3629

U.S. Postal Service™
CERTIFIED MAIL™ RECEIPT
(Domestic Mail Only; No Insurance Coverage Provided)

For delivery information visit our website at www.usps.com®

SOUTH SALEM, NY 10590 OFFICIAL USE

Postage	$3.30	0525 10
Certified Fee	$2.70	
Return Reciept Fee (Endorsement Required)	$0.00	
Restricted Delivery Fee (Endorsement Required)	$0.00	
Total Postage & Fees	$0.47 $6.47	12/01/2016

Postmark Here

DEC - 1 2016 USPS

Sent
Street, Apt. or PO Box
City, State,

ROGER AND BARBARA ANN HOLMES
9 RESERVOIR ROAD
SOUTH SALEM, NY 10590

PS Form 3800, June 2002 See Reverse for Instructions

7002 3150 0003 9538 3612

U.S. Postal Service™
CERTIFIED MAIL™ RECEIPT
(Domestic Mail Only; No Insurance Coverage Provided)

For delivery information visit our website at www.usps.com®

SOUTH SALEM, NY 10590 OFFICIAL USE

Postage	$3.30	0525 10
Certified Fee	$2.70	
Return Reciept Fee (Endorsement Required)	$0.00	
Restricted Delivery Fee (Endorsement Required)	$0.00	
Total Postage & Fees	$0.47 $6.47	12/01/2016

Postmark Here

DEC - 1 2016 USPS

Sent
Street, Apt. or PO Box
City, State,

BARBARA AND JOHN MC KAY
12 RESERVOIR ROAD
SOUTH SALEM, NY 10590

PS Form 3800, June 2002 See Reverse for Instructions

7002 3150 0003 9538 3605

U.S. Postal Service™
CERTIFIED MAIL™ RECEIPT
(Domestic Mail Only; No Insurance Coverage Provided)

For delivery information visit our website at www.usps.com®

SOUTH SALEM, NY 10590 OFFICIAL USE

Postage	$3.30	0525 10
Certified Fee	$2.70	
Return Reciept Fee (Endorsement Required)	$0.00	
Restricted Delivery Fee (Endorsement Required)	$0.00	
Total Postage & Fees	$0.47 $6.47	12/01/2016

Postmark Here

DEC - 1 2016 USPS

Sent
Street, Apt. or PO Box
City, State,

YOUNG JA LEE
10 RESERVOIR ROAD
SOUTH SALEM, NY 10590

PS Form 3800, June 2002 See Reverse for Instructions

7002 3150 0003 9538 3599

U.S. Postal Service™
CERTIFIED MAIL™ RECEIPT
(Domestic Mail Only; No Insurance Coverage Provided)

For delivery information visit our website at www.usps.com®

NORWALK, CT 06852 OFFICIAL USE

Postage	$3.30	0525 10
Certified Fee	$2.70	
Return Reciept Fee (Endorsement Required)	$0.00	
Restricted Delivery Fee (Endorsement Required)	$0.00	
Total Postage & Fees	$0.47 $6.47	12/01/2016

Postmark Here

DEC - 1 2016 USPS

Sent To
Street, Apt. or PO Box
City, State,

NORWALK CITY FIRST TAXING DISTRICT
P. O. BOX 27
NORWALK, CT 06852

PS Form 3800, June 2002 See Reverse for Instructions

7002 3150 0003 9538 4305

U.S. Postal Service™
CERTIFIED MAIL™ RECEIPT
(Domestic Mail Only; No Insurance Coverage Provided)

For delivery information visit our website at www.usps.com®

SOUTH SALEM, NY 10590 OFFICIAL USE

Postage	$3.30
Certified Fee	$2.70
Return Reciept Fee (Endorsement Required)	$0.00
Restricted Delivery Fee (Endorsement Required)	$0.00
Total Postage & Fees	$6.68

Postmark Here: NOV 21 2016 USPS 0525 04

11/21/2016

Sent To: Roy Trauber
Street, Apt. No.; or PO Box No.: 87 Lockwood Rd.
City, State, ZIP+4: South Salem, NY 10590

PS Form 3800, June 2002 — See Reverse for Instructions

7002 3150 0003 9538 4312

U.S. Postal Service™
CERTIFIED MAIL™ RECEIPT
(Domestic Mail Only; No Insurance Coverage Provided)

For delivery information visit our website at www.usps.com®

SOUTH SALEM, NY 10590 OFFICIAL USE

Postage	$3.30
Certified Fee	$2.70
Return Reciept Fee (Endorsement Required)	$0.00
Restricted Delivery Fee (Endorsement Required)	$0.00
Total Postage & Fees	$6.68

Postmark Here: NOV 21 2016 USPS 0525 04

11/21/2016

Sent To: Thomas & Anne Allwood
Street, Apt. No.; or PO Box No.: 83 Lockwood rd
City, State, ZIP+4: South Salem, NY 10590

PS Form 3800, June 2002 — See Reverse for Instructions

7002 3150 0003 9538 4329

U.S. Postal Service™
CERTIFIED MAIL™ RECEIPT
(Domestic Mail Only; No Insurance Coverage Provided)

For delivery information visit our website at www.usps.com®

SOUTH SALEM, NY 10590 OFFICIAL USE

Postage	$3.30
Certified Fee	$2.70
Return Reciept Fee (Endorsement Required)	$0.00
Restricted Delivery Fee (Endorsement Required)	$0.00
Total Postage & Fees	$6.68

Postmark Here: NOV 21 2016 USPS 0525 04

11/21/2016

Sent To: Jesus Cruz
Street, Apt. No.; or PO Box No.: 69 Lockwood rd
City, State, ZIP+4: South Salem, NY 10590

PS Form 3800, June 2002 — See Reverse for Instructions

7002 3150 0003 9538 4336

U.S. Postal Service™
CERTIFIED MAIL™ RECEIPT
(Domestic Mail Only; No Insurance Coverage Provided)

For delivery information visit our website at www.usps.com®

SOUTH SALEM, NY 10590 OFFICIAL USE

Postage	$3.30
Certified Fee	$2.70
Return Reciept Fee (Endorsement Required)	$0.00
Restricted Delivery Fee (Endorsement Required)	$0.00
Total Postage & Fees	$6.68

Postmark Here: NOV 21 2016 USPS 0525 04

11/21/2016

Sent To: Paul & Lauren Mangieri
Street, Apt. No.; or PO Box No.: 63 Lockwood Rd.
City, State, ZIP+4: South Salem, NY 10590

PS Form 3800, June 2002 — See Reverse for Instructions

7002 3150 0003 9538 4343

U.S. Postal Service™
CERTIFIED MAIL™ RECEIPT
(Domestic Mail Only; No Insurance Coverage Provided)

For delivery information visit our website at www.usps.com®

SOUTH SALEM, NY 10590 OFFICIAL USE

Postage	$3.30
Certified Fee	$2.70
Return Reciept Fee (Endorsement Required)	$0.00
Restricted Delivery Fee (Endorsement Required)	$0.00
Total Postage & Fees	$6.68

Postmark Here: NOV 21 2016 USPS 0525 04

11/21/2016

Sent To: David Bull & Teresa Longyear
Street, Apt. No.; or PO Box No.: 57 Lockwood Rd
City, State, ZIP+4: South Salem, NY 10590

PS Form 3800, June 2002 — See Reverse for Instructions

7002 3150 0003 9538 4350

U.S. Postal Service™
CERTIFIED MAIL™ RECEIPT
(Domestic Mail Only; No Insurance Coverage Provided)

For delivery information visit our website at www.usps.com®

SOUTH SALEM, NY 10590 OFFICIAL USE

Postage	$3.30
Certified Fee	$2.70
Return Reciept Fee (Endorsement Required)	$0.00
Restricted Delivery Fee (Endorsement Required)	$0.00
Total Postage & Fees	$6.68

Postmark Here: NOV 21 2016 USPS 0525 04

11/21/2016

Sent To: Robert & Helen Welch
Street, Apt. No.; or PO Box No.: 47 Lockwood Rd
City, State, ZIP+4: South Salem, NY 10590

PS Form 3800, June 2002 — See Reverse for Instructions

7002 3150 0003 9538 4367

U.S. Postal Service™
CERTIFIED MAIL™ RECEIPT
(Domestic Mail Only; No Insurance Coverage Provided)

For delivery information visit our website at www.usps.com®

SOUTH SALEM, NY 10590 OFFICIAL USE

Postage	$3.30
Certified Fee	$2.70
Return Reciept Fee (Endorsement Required)	$0.00
Restricted Delivery Fee (Endorsement Required)	$0.00
Total Postage & Fees	$0.68
	$6.68

Postmark Here: 0525 04 — NOV 21 2016 — 11/21/2016

Sent To: Peter Caratzas & Nataliya Yakovchuk
Street, Apt. No.; or PO Box No.: 16 Silvermine Dr
City, State, ZIP+4: South Salem, NY 10590

PS Form 3800, June 2002 — See Reverse for Instructions

7002 3150 0003 9538 4374

U.S. Postal Service™
CERTIFIED MAIL™ RECEIPT
(Domestic Mail Only; No Insurance Coverage Provided)

For delivery information visit our website at www.usps.com®

SOUTH SALEM, NY 10590 OFFICIAL USE

Postage	$3.30
Certified Fee	$2.70
Return Reciept Fee (Endorsement Required)	$0.00
Restricted Delivery Fee (Endorsement Required)	$0.00
Total Postage & Fees	$0.68
	$6.68

Postmark Here: 0525 04 — NOV 21 2016 — 11/21/2016

Sent To: Rhonda Shaw
Street, Apt. No.; or PO Box No.: 18 Silvermine Dr
City, State, ZIP+4: South Salem, NY 10590

PS Form 3800, June 2002 — See Reverse for Instructions

7002 3150 0003 9538 3438

U.S. Postal Service™
CERTIFIED MAIL™ RECEIPT
(Domestic Mail Only; No Insurance Coverage Provided)

For delivery information visit our website at www.usps.com®

SOUTH SALEM, NY 10590 OFFICIAL USE

Postage	$3.30
Certified Fee	$2.70
Return Reciept Fee (Endorsement Required)	$0.00
Restricted Delivery Fee (Endorsement Required)	$0.00
Total Postage & Fees	$0.68
	$6.68

Postmark Here: 0525 04 — NOV 21 2016 — 11/21/2016

Sent To: Joseph & Linda Malachio
Street, Apt. No.; or PO Box No.: 20 Silvermine Dr
City, State, ZIP+4: South Salem, NY 10590

PS Form 3800, June 2002 — See Reverse for Instructions

7002 3150 0003 9538 3445

U.S. Postal Service™
CERTIFIED MAIL™ RECEIPT
(Domestic Mail Only; No Insurance Coverage Provided)

For delivery information visit our website at www.usps.com®

SOUTH SALEM, NY 10590 OFFICIAL USE

Postage	$3.30
Certified Fee	$2.70
Return Reciept Fee (Endorsement Required)	$0.00
Restricted Delivery Fee (Endorsement Required)	$0.00
Total Postage & Fees	$0.68
	$6.68

Postmark Here: 0525 04 — NOV 21 2016 — 11/21/2016

Sent To: Kenneth & Ellen Levinsohn
Street, Apt. No.; or PO Box No.: 22 Silvermine Dr
City, State, ZIP+4: South Salem, NY 10590

PS Form 3800, June 2002 — See Reverse for Instructions

7002 3150 0003 9538 3452

U.S. Postal Service™
CERTIFIED MAIL™ RECEIPT
(Domestic Mail Only; No Insurance Coverage Provided)

For delivery information visit our website at www.usps.com®

SOUTH SALEM, NY 10590 OFFICIAL USE

Postage	$3.30
Certified Fee	$2.70
Return Reciept Fee (Endorsement Required)	$0.00
Restricted Delivery Fee (Endorsement Required)	$0.00
Total Postage & Fees	$0.68
	$6.68

Postmark Here: 0525 04 — NOV 21 2016 — 11/21/2016

Sent To: Jerome & Katherine August
Street, Apt. No.; or PO Box No.: 24 Silvermine Dr
City, State, ZIP+4: South Salem, NY 10590

PS Form 3800, June 2002 — See Reverse for Instructions

7002 3150 0003 9538 3469

U.S. Postal Service™
CERTIFIED MAIL™ RECEIPT
(Domestic Mail Only; No Insurance Coverage Provided)

For delivery information visit our website at www.usps.com®

SOUTH SALEM, NY 10590 OFFICIAL USE

Postage	$3.30
Certified Fee	$2.70
Return Reciept Fee (Endorsement Required)	$0.00
Restricted Delivery Fee (Endorsement Required)	$0.00
Total Postage & Fees	$0.68
	$6.68

Postmark Here: 0525 04 — NOV 21 2016 — 11/21/2016

Sent To: Peter & Jacqueline Minio
Street, Apt. No.; or PO Box No.: 23 Silvermine Dr
City, State, ZIP+4: South Salem, NY 10590

PS Form 3800, June 2002 — See Reverse for Instructions

7002 3150 0003 9538 3476

U.S. Postal Service™
CERTIFIED MAIL™ RECEIPT
(Domestic Mail Only; No Insurance Coverage Provided)

For delivery information visit our website at www.usps.com®

SOUTH SALEM, NY 10590 OFFICIAL USE

Postage	$3.30
Certified Fee	$2.70
Return Reciept Fee (Endorsement Required)	$0.00
Restricted Delivery Fee (Endorsement Required)	$0.00
Total Postage & Fees	$6.68

Postmark Here: NOV 21 2016 USPS 0525 04

11/21/2016

Sent To: Douglas & Dana Moore
Street, Apt. No.; or PO Box No.: 25 Silvermine Dr
City, State, ZIP+4: South Salem, NY 10590

PS Form 3800, June 2002 — See Reverse for Instructions

7002 3150 0003 9538 3483

U.S. Postal Service™
CERTIFIED MAIL™ RECEIPT
(Domestic Mail Only; No Insurance Coverage Provided)

For delivery information visit our website at www.usps.com®

SOUTH SALEM, NY 10590 OFFICIAL USE

Postage	$3.30
Certified Fee	$2.70
Return Reciept Fee (Endorsement Required)	$0.00
Restricted Delivery Fee (Endorsement Required)	$0.00
Total Postage & Fees	$6.68

Postmark Here: NOV 21 2016 USPS 0525 04

11/21/2016

Sent To: Johannes and Nancy Wille
Street, Apt. No.; or PO Box No.: 109 Lockwood Rd
City, State, ZIP+4: South Salem, NY 10590

PS Form 3800, June 2002 — See Reverse for Instructions

7002 3150 0003 9538 3490

U.S. Postal Service™
CERTIFIED MAIL™ RECEIPT
(Domestic Mail Only; No Insurance Coverage Provided)

For delivery information visit our website at www.usps.com®

SOUTH SALEM, NY 10590 OFFICIAL USE

Postage	$3.30
Certified Fee	$2.70
Return Reciept Fee (Endorsement Required)	$0.00
Restricted Delivery Fee (Endorsement Required)	$0.00
Total Postage & Fees	$6.68

Postmark Here: NOV 21 2016 USPS 0525 04

11/21/2016

Sent To: Nicole Tuman and Patrick Walsh
Street, Apt. No.; or PO Box No.: 92 Lockwood RD
City, State, ZIP+4: South Salem, NY 10590

PS Form 3800, June 2002 — See Reverse for Instructions

7002 3150 0003 9538 3506

U.S. Postal Service™
CERTIFIED MAIL™ RECEIPT
(Domestic Mail Only; No Insurance Coverage Provided)

For delivery information visit our website at www.usps.com®

SOUTH SALEM, NY 10590 OFFICIAL USE

Postage	$3.30
Certified Fee	$2.70
Return Reciept Fee (Endorsement Required)	$0.00
Restricted Delivery Fee (Endorsement Required)	$0.00
Total Postage & Fees	$6.68

Postmark Here: NOV 21 2016 USPS 0525 04

11/21/2016

Sent To: Barbara Polowczyk
Street, Apt. No.; or PO Box No.: 96 Lockwood Rd
City, State, ZIP+4: South Salem, NY, 10590

PS Form 3800, June 2002 — See Reverse for Instructions

7002 3150 0003 9538 3513

U.S. Postal Service™
CERTIFIED MAIL™ RECEIPT
(Domestic Mail Only; No Insurance Coverage Provided)

For delivery information visit our website at www.usps.com®

SOUTH SALEM, NY 10590 OFFICIAL USE

Postage	$3.30
Certified Fee	$2.70
Return Reciept Fee (Endorsement Required)	$0.00
Restricted Delivery Fee (Endorsement Required)	$0.00
Total Postage & Fees	$6.68

Postmark Here: NOV 21 2016 USPS 0525 04

11/21/2016

Sent To: Carmine and Mary Garreffa
Street, Apt. No.; or PO Box No.: 100 Lockwood Rd
City, State, ZIP+4: South Salem, NY 10590

PS Form 3800, June 2002 — See Reverse for Instructions

7002 3150 0003 9538 3582

U.S. Postal Service™
CERTIFIED MAIL™ RECEIPT
(Domestic Mail Only; No Insurance Coverage Provided)

For delivery information visit our website at www.usps.com®

SOUTH SALEM, NY 10590 OFFICIAL USE

Postage	$3.30
Certified Fee	$2.70
Return Reciept Fee (Endorsement Required)	$0.00
Restricted Delivery Fee (Endorsement Required)	$0.00
Total Postage & Fees	$6.68

Postmark Here: NOV 21 2016 USPS 0525 04

11/21/2016

Sent To: Edmond Dost and Tamara Hared
Street, Apt. No.; or PO Box No.: 106 Lockwood Rd
City, State, ZIP+4: South Salem, NY 10590

PS Form 3800, June 2002 — See Reverse for Instructions

AFFIDAVIT OF PUBLIC HEARING NOTICE

IN THE MATTER OF APPLICATIONS FOR PRELIMINARY SUBDIVISION PLAT APPROVAL AND WETLAND ACTIVITY PERMIT APPROVAL FOR SILVERMINE PRESERVE, SILVERMINE DRIVE AND LOCKWOOD ROAD, SOUTH SALEM, NEW YORK, OWNERS OF RECORD, RIDGEVIEW DESIGNER BUILDERS, INC. & DANIEL HIGGINS, TO PERMIT THE CONSTRUCTION OF A 13-LOT CLUSTER SUBDIVISION. THE PROPERTY IS LOCATED BETWEEN SILVERMINE DRIVE AND LOCKWOOD ROAD, CONSISTS OF APPROXIMATELY 58 ACRES OF LAND, AND IS LOCATED WITHIN THE TOWN'S R-2A ZONING DISTRICT. THE PROPERTY IS DESIGNATED ON THE TAX MAP AS SHEET 48, BLOCK 10057, LOT 15 AND SHEET 48, BLOCK 10057, LOT 104.

STATE OF NEW YORK

COUNTY OF WESTCHESTER

ERIC MOSS, being duly sworn says that on November ~~21~~ 28, 2016, I posted signs provided to me by the Lewisboro Planning Department at the end of the Silvermine Drive cul-de-sac and at the driveway to 105 Lockwood Road noticing the December 20, 2016 Planning Board Public Hearing.

Sworn before me this 8th

Day of December, **2016.**

Notary Public

Eric Moss

SAMANTHA L INCLEDON
Notary Public - State of New York
No. 01IN6304669
Qualified In Westchester County
My Commission Expires June 2, 2018

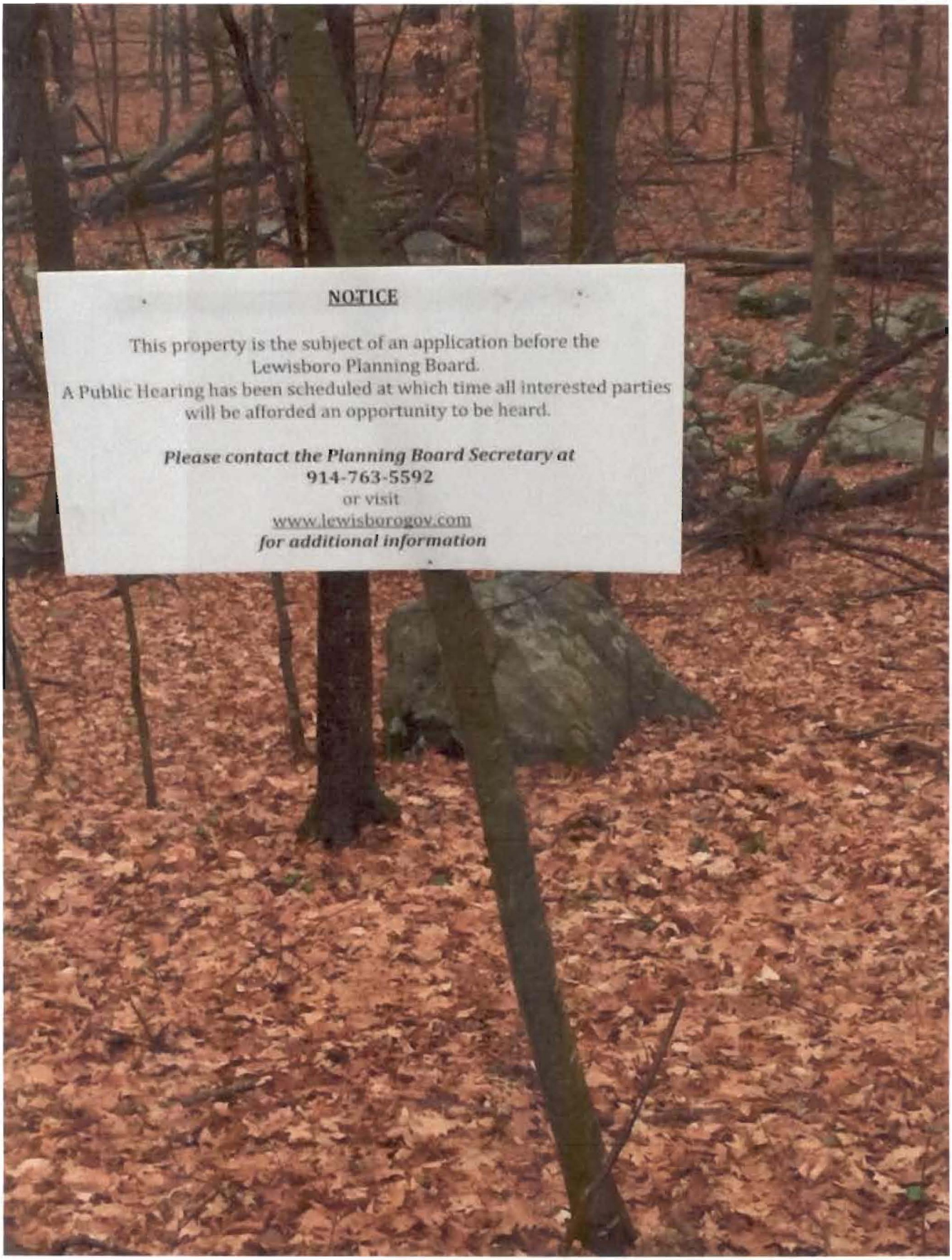
NOTICE
This property is the subject of an application before the
Lewisboro Planning Board.
A Public Hearing has been scheduled at which time all interested parties
will be afforded an opportunity to be heard.
Please contact the Planning Board Secretary at
914-763-5592
or visit
www.lewisborogov.com
for additional information

NOTICE
This property is the subject of an application before the
Lewisboro Planning Board.
A Public Hearing has been scheduled at which time all interested parties
will be afforded an opportunity to be heard.
Please contact the Planning Board Secretary at
914-763-5592
or visit
www.lewisborogov.com
for additional information

KELLARD SESSIONS
CONSULTING, P.C.

John Kellard, P.E.
David Sessions, RLA, AICP

MEMORANDUM

TO: Chairman Jerome Kerner, AIA and
Members of Lewisboro Planning Board

CC: Ciorsdan Conran
Judson Siebert, Esq.

FROM: Jan K. Johannessen, AICP
Joseph M. Cermele, P.E., CFM
David J. Sessions, RLA, AICP
Town Consulting Professionals

DATE: December 14, 2016

RE: Wetland Activity Permits
Vista Fire District Dry Hydrant
McPhillips - 4 Robins Court
Lake Kitchawan Association - 66 Lake Kitchawan Drive

We have reviewed the submitted application materials and offer the following comments pertaining to the proposed dry hydrants to be located at 4 Robins Court and 166 Lake Kitchawan Drive:

1. The owner of the property should submit a letter identifying that he/she consents to the project as proposed and depicted on the submitted drawings.

2. The project description provided with the application states "dry hydrant renovation". Is there an existing dry hydrant? If so, where is it located, why does it need to be replaced, and what will become of the existing hydrant?

3. To confirm the rights of the Fire District and to ensure continued access to the dry hydrant, an easement between the property owner and the Fire District, in form acceptable to the Planning Board Attorney, shall be prepared and recorded; proof of recording with the Westchester County Clerk shall be provided.

4. Please identify the extent of tree removal, if any.

5. The applicant must coordinate with the New York State Department of Environmental Conservation (NYSDEC) and Army Corps of Engineers (ACOE) to determine the extent of their jurisdiction, if any.

6. A Highway Work Permit may be required from the Town Highway Superintendent; the applicant shall coordinate with the Highway Department.

Document & Plans Reviewed:

- Wetland Permit Application
- Dry Hydrant Plan Set

JKJ/JMC/DJS/dc

T:\Lewisboro\Correspondence\LW4107&4108JJ-LWPB-McPhillips-LakeKitch-DryHydr-Review-Memo-12-14-16.docx

Application No.: 52-16WP
Fee: Ø Date: 10/18/16

TOWN OF LEWISBORO
WETLAND PERMIT APPLICATION

Town Offices @ Orchard Square, Suite L (Lower Level), 20 North Salem Road, Cross River, NY 10518
Phone: (914) 763-3060
Fax: (914)533-0097

Project Information

Project Address: 4 Robins Court

Sheet: 0053 Block: 01834 Lot(s): 151

Project Description (identify the improvements proposed within the wetland/wetland buffer and the approximate amount of wetland/wetland buffer disturbance): Dry Hydrant Rennovation

Owner's Information

Owner's Name: David McPhillips Phone: 917.623.7219

Owner's Address: 4 Robins Court Email: dmcp66@gmail.com

Applicant's Information (if different)

Applicant's Name: Vista Fire District Phone: 914533-2727

Applicant's Address: 377 SMITH RIDGE ROAD SOUTH SALEM NY 10590 Email:

Authorized Agent's Information (if applicable)

Agent's Name: Phone:

Agent's Adress: Email:

To Be Completed By Owner/Applicant

1. What type of Wetland Permit is required? (see §217-5C and §217-5D of the Town Code)

   ☒ Administrative ☐ Planning Board

2. Is the project located within the NYCDEP Watershed? ☐ Yes ☐ No

3. Total area of proposed disturbance: ☒ < 5,000 s.f. ☐ 5,000 s.f. - < 1 acre ☐ ≥1 acre

4. Does the proposed action require any other permits/approvals from other agencies/departments? (Planning Board, Town Board, Zoning Board of Appeals, Building Department, Town Highway, ACARC, NYSDEC, NYCDEP, WCDOH, NYSDOT, etc): Identify all other permits/approvals required:

Note: Initially, all applications shall be submitted with a plan that illustrates the existing conditions and proposed improvements. Said plan must include a line which encircles the total area of proposed land disturbance and the approximate area of disturbance must be calculated (square feet). The Planning Board and/or Town Wetland Inspector may require additional materials, information, reports and plans, as determined necessary, to review and evaluate the proposed action. If the proposed action requires a Planning Board Wetland Permit, the application materials outlined under §217-7 of the Town Code must be submitted, unless waived by the Planning Board. The Planning Board may establish an initial escrow deposit to cover the cost of application/plan review and inspections conducted by the Town's consultants.

For administrative wetland permits, see attached Administrative Wetland Permit Fee Schedule.

Owner/Applicant Signature: Date: 10/10/16

TOWN OF LEWISBORO PLANNING BOARD

PO Box 725, 20 North Salem Road, Cross River, NY 10518
Email: planning@lewisborogov.com
Tel: (914) 763-5592 Fax: (914) 763-3637

Tax Payment Affidavit Requirement

This form must accompany all applications to the Planning Board.

Under regulations adopted by the Town of Lewisboro, the Planning Board may not accept any application unless an affidavit from the Town of Lewisboro Receiver of Taxes is on file in the Planning Board office. The affidavit must show that all amounts due to the Town of Lewisboro as real estate taxes and special assessments on the total area encompassed by the application, together with all penalties and interest thereon, have been paid.

Under New York State law, the Westchester County Clerk may not accept any subdivision map for filing unless the same type of affidavit from the Town of Lewisboro Receiver of Taxes is submitted by the applicant at the time of filing.

This form must be completed by the applicant and must accompany all applications to the Planning Board. Upon receipt, the Planning Board Secretary will send the form to the Receiver of Taxes for signature and notarization. If preferred, the applicant may directly obtain the signature of the Receiver of Taxes and notarization prior to submission.

To Be Completed by Applicant
(Please type or print)

David McPhillips
Name of Applicant

VFD Hydrant
Project Name

Property Description

Tax Block(s): 09834

Tax Lot(s): 151

Tax Sheet(s): 53

Property Assessed to:

David McPhillips
Name

4 Robins Ct
Address

South Salem, NY 10590
City State Zip

The undersigned, being duly sworn deposes and says that a search of the tax records in the office of the Receiver of Taxes, Town of Lewisboro, reveals that all amounts due to the Town of Lewisboro as real estate taxes and special assessments, together with all penalties and interest thereon, affecting the premises described below, have been paid.

Signature - Receiver of Taxes: [signature] 10/13/2016
Date

Sworn to before me this
13th day of October, 2016

JANET L. DONOHUE
NOTARY PUBLIC, STATE OF NEW YORK
No. 01DO6259627
Qualified in Westchester County
Commission Expires April 16, 2020

Janet L Donohue
Signature - Notary Public (affix stamp)

TOWN OF LEWISBORO PLANNING BOARD

PO Box 725, 20 North Salem Road, Cross River, NY 10518
Email: planning@lewisborogov.com
Tel: (914) 763-5592
Fax: (914) 763-3637

Affidavit of Ownership

State of : New York

County of: Westchester

David M. Phillips, being duly sworn, deposes and says that he/she

resides at 4 Robins Court South Salem, NY 10590

in the County of Westchester, State of New York

and that he/she is (check one) ✓ the owner, or ____ the _____
Title

of _____
Name of corporation, partnership, or other legal entity

which is the owner, in fee of all that certain log, piece or parcel of land situated, lying and being in the Town of Lewisboro, New York, aforesaid and know and designated on the Tax Map in the Town of Lewisboro as:

Block 09834, Lot 151, on Sheet 53.

Owner's Signature

Sworn to before me this

13th day of October, 2016

Samantha L

SAMANTHA L INCLEDON
Notary Public - State of New York
No. 01IN6304669
Qualified In Westchester County
My Commission Expires June 2, 2018

Notary Public - affix stamp

Dry Hydrant

For

Vista Fire District

Location: #4 Robins Court (Pond)

South Salem (Vista) NY 10590

Material List

30' 8" PVC Pipe Schedule 40 PVC

2 8" 45 (degree) Elbow Slip x Slip Fitting Schedule 40 PVC

1 6" Female Adaptor (Fire Dept. Connection) with end plug

1 8" Barrel Strainer with back flush

1 Reflective Dry Hydrant Sign Assembly

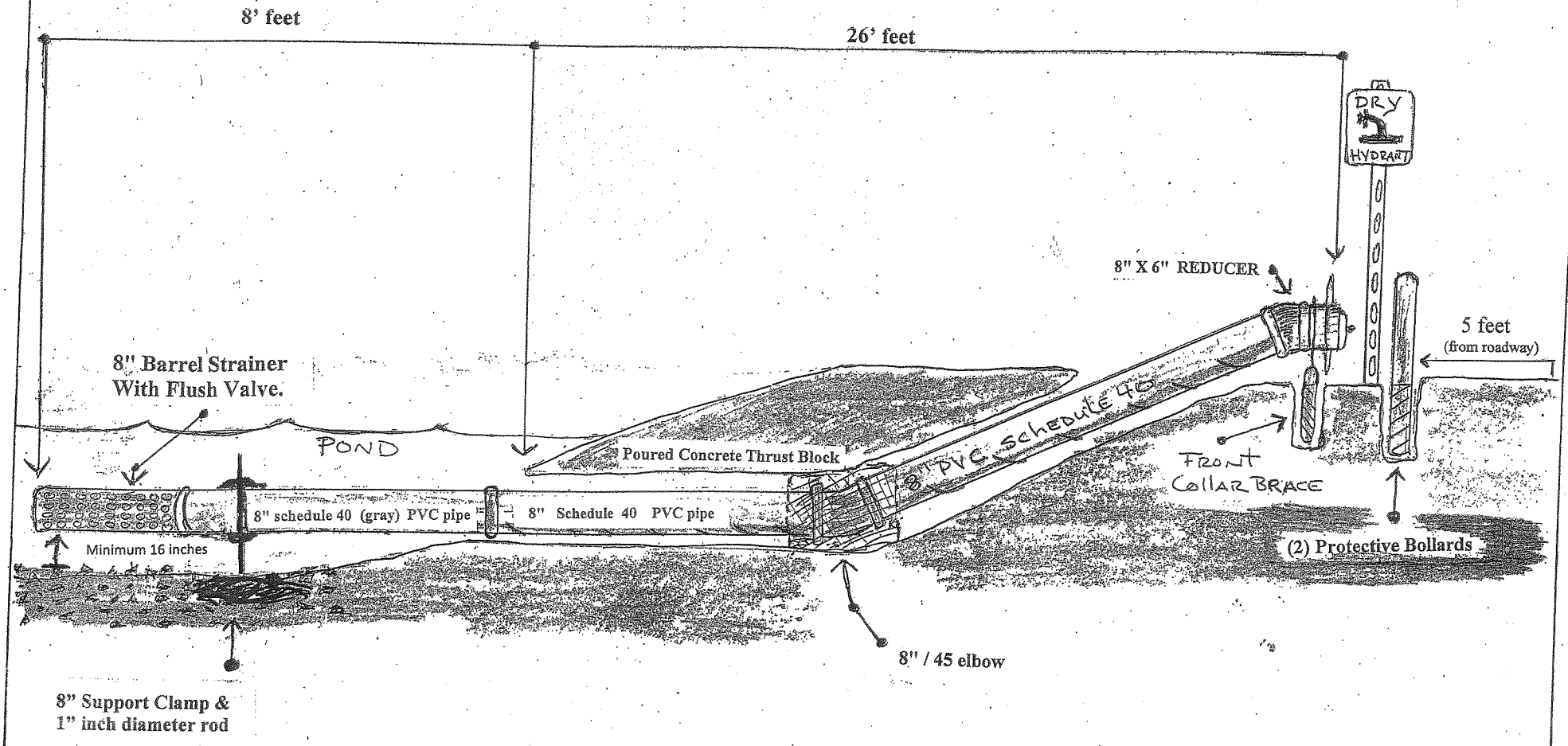

Vista Fire District Dry Hydrant Project Sketch/drawings Michael J Lombardi Date: October 04, 2016	Project Name/ David W. McPhillips &Autumn S. #4 Robins Court South Salem, NY 10590 Lot: 151 Block: 09834 Sheet: 0053	Page/ A-1

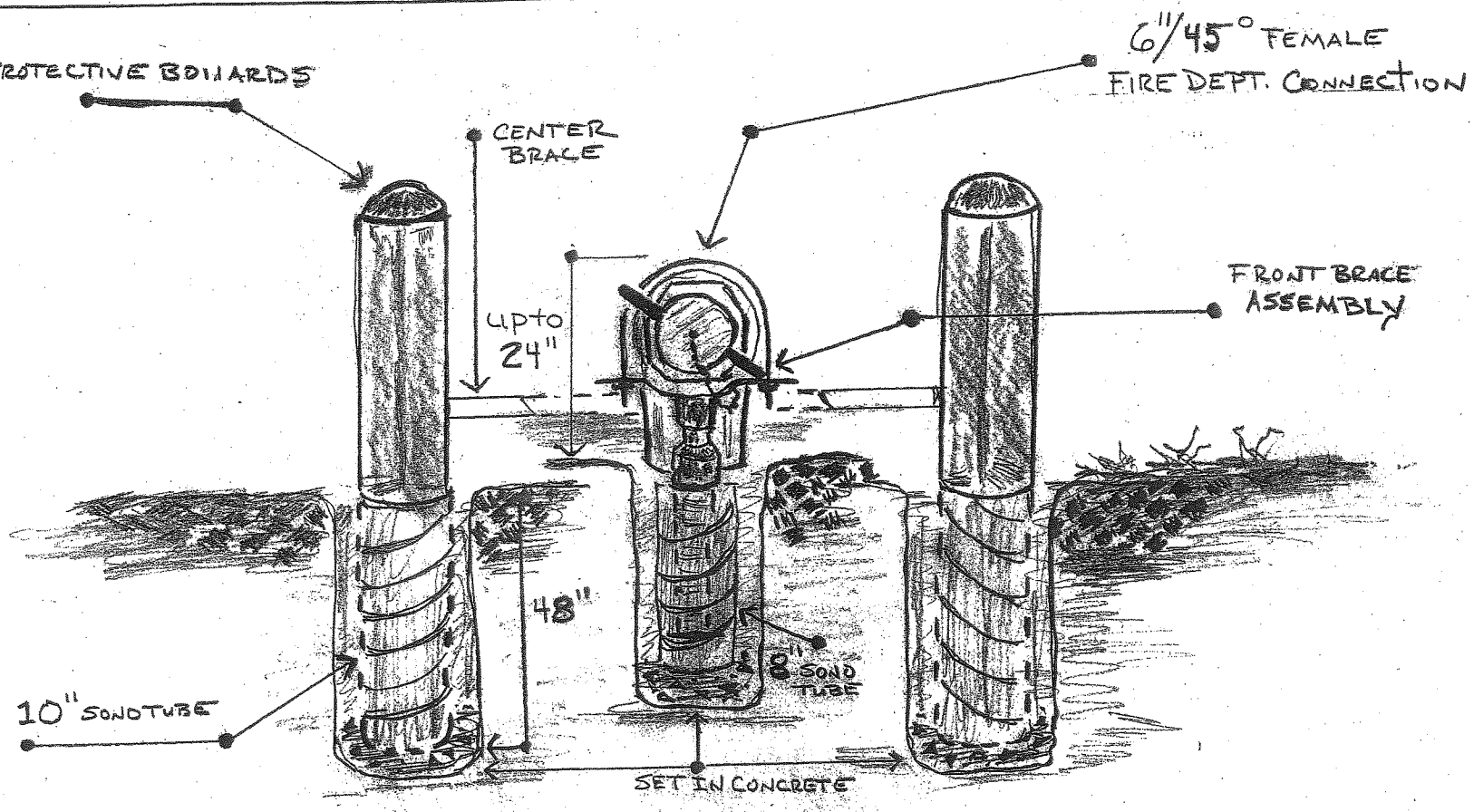

Vista Fire District **Dry Hydrant Project** **Sketch/drawings** **Michael J Lombardi** **Date:** October 04, 2016	**Project Name/** David W. McPhillips &Autumn S. #4 Robins Court South Salem, NY 10590 Lot: 151 Block: 09834 Sheet: 0053	**Page/** A-2

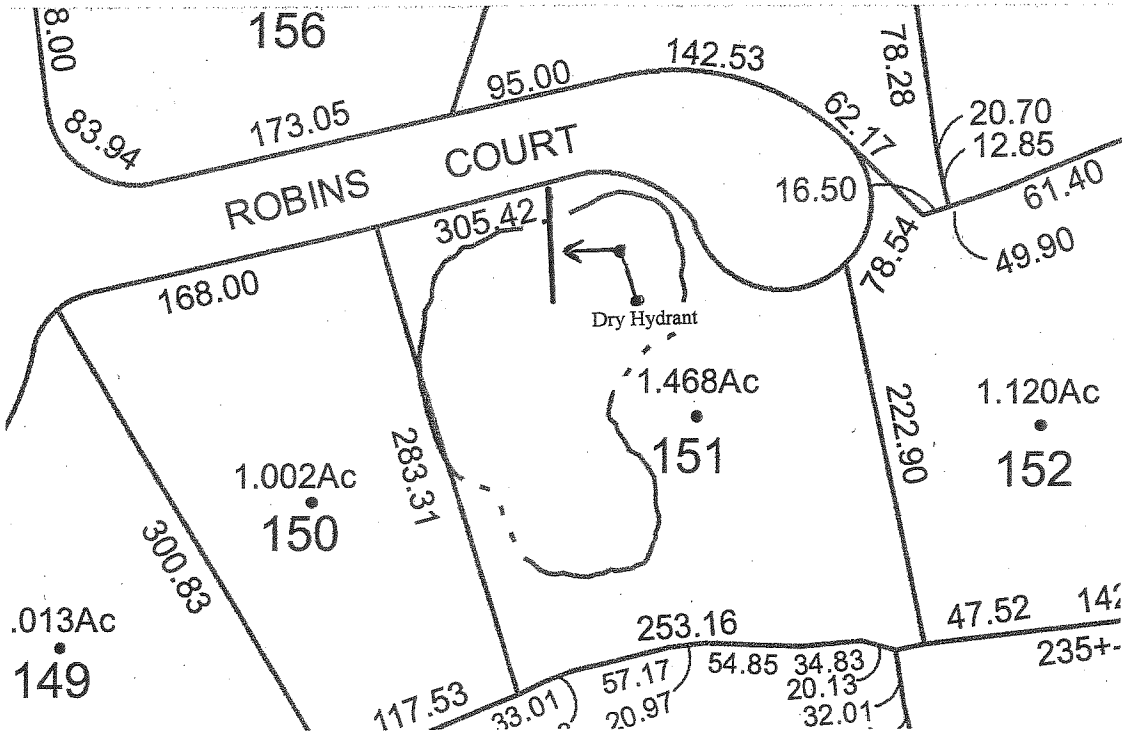

Vista Fire District **Dry Hydrant Project** **Sketch/drawings** **Michael J Lombardi** **Date:** October 04, 2016	**Project Name/** David W. McPhillips &Autumn S. #4 Robins Court South Salem, NY 10590 Lot: 151 Block: 09834 Sheet: 0053	**Page/** A-3

Referenced Town of Lewisboro Tax Map

KELLARD SESSIONS
CONSULTING, P.C.

John Kellard, P.E.
David Sessions, RLA, AICP

MEMORANDUM

TO: Chairman Jerome Kerner, AIA and
Members of Lewisboro Planning Board

CC: Ciorsdan Conran
Judson Siebert, Esq.

FROM: Jan K. Johannessen, AICP
Joseph M. Cermele, P.E., CFM
David J. Sessions, RLA, AICP
Town Consulting Professionals

DATE: December 14, 2016

RE: Wetland Activity Permits
Vista Fire District Dry Hydrant
McPhillips - 4 Robins Court
Lake Kitchawan Association - 66 Lake Kitchawan Drive

We have reviewed the submitted application materials and offer the following comments pertaining to the proposed dry hydrants to be located at 4 Robins Court and 166 Lake Kitchawan Drive:

1. The owner of the property should submit a letter identifying that he/she consents to the project as proposed and depicted on the submitted drawings.

2. The project description provided with the application states "dry hydrant renovation". Is there an existing dry hydrant? If so, where is it located, why does it need to be replaced, and what will become of the existing hydrant?

3. To confirm the rights of the Fire District and to ensure continued access to the dry hydrant, an easement between the property owner and the Fire District, in form acceptable to the Planning Board Attorney, shall be prepared and recorded; proof of recording with the Westchester County Clerk shall be provided.

4. Please identify the extent of tree removal, if any.

5. The applicant must coordinate with the New York State Department of Environmental Conservation (NYSDEC) and Army Corps of Engineers (ACOE) to determine the extent of their jurisdiction, if any.

6. A Highway Work Permit may be required from the Town Highway Superintendent; the applicant shall coordinate with the Highway Department.

Document & Plans Reviewed:

- Wetland Permit Application
- Dry Hydrant Plan Set

JKJ/JMC/DJS/dc

T:\Lewisboro\Correspondence\LW4107&4108JJ-LWPB-McPhillips-LakeKitch-DryHydr-Review-Memo-12-14-16.docx

Application No.: 55-16WP
Fee: 0 Date: 11/7/16

TOWN OF LEWISBORO
WETLAND PERMIT APPLICATION

Town Offices @ Orchard Square, Suite L (Lower Level), 20 North Salem Road, Cross River, NY 10518
Phone: (914) 763-3060
Fax: (914)533-0097

Project Information

Project Address: 166 Lake Kitchawan Drive

Sheet: 42 Block: 10287 Lot(s): 22

Project Description (identify the improvements proposed within the wetland/wetland buffer and the approximate amount of wetland/wetland buffer disturbance): Dry Hydrant Rennovation

Owner's Information

Owner's Name: Lake Kitchawan Association Phone: 914-763-8461

Owner's Address: PO. Box 261 ~~166 Lake Kitchawan Drive~~ Email: niolw@att.net
SOUTH SALEM NY 10590

Applicant's Information (if different)

Applicant's Name: Vista Fire District Phone: 914 533-2727

Applicant's Address: 377 SMITH RIDGE ROAD South Salem NY 10590 Email: bporco@vistafd.org

Authorized Agent's Information (if applicable)

Agent's Name: Joseph Niolw Phone: 914-763-8461

Agent's Adress: 27 Grandview Rd So. Salem N.Y. Email: niolw@att.net

To Be Completed By Owner/Applicant

1. What type of Wetland Permit is required? (see §217-5C and §217-5D of the Town Code)

   ☒ Administrative ☐ Planning Board

2. Is the project located within the NYCDEP Watershed? ☐ Yes ☐ No

3. Total area of proposed disturbance: ☒ < 5,000 s.f. ☐ 5,000 s.f. - < 1 acre ☐ ≥1 acre

4. Does the proposed action require any other permits/approvals from other agencies/departments? (Planning Board, Town Board, Zoning Board of Appeals, Building Department, Town Highway, ACARC, NYSDEC, NYCDEP, WCDOH, NYSDOT, etc): Identify all other permits/approvals required: _____

Note: Initially, all applications shall be submitted with a plan that illustrates the existing conditions and proposed improvements. Said plan must include a line which encircles the total area of proposed land disturbance and the approximate area of disturbance must be calculated (square feet). The Planning Board and/or Town Wetland Inspector may require additional materials, information, reports and plans, as determined necessary, to review and evaluate the proposed action. If the proposed action requires a Planning Board Wetland Permit, the application materials outlined under §217-7 of the Town Code must be submitted, unless waived by the Planning Board. The Planning Board may establish an initial escrow deposit to cover the cost of application/plan review and inspections conducted by the Town's consultants.

For administrative wetland permits, see attached Administrative Wetland Permit Fee Schedule.

~~Owner~~/Applicant Signature: [signature] Date: 11/7/16

TOWN OF LEWISBORO PLANNING BOARD

PO Box 725, 20 North Salem Road, Cross River, NY 10518
Email: planning@lewisborogov.com
Tel: (914) 763-5592 Fax: (914) 763-3637

Tax Payment Affidavit Requirement

This form must accompany all applications to the Planning Board.

Under regulations adopted by the Town of Lewisboro, the Planning Board may not accept any application unless an affidavit from the Town of Lewisboro Receiver of Taxes is on file in the Planning Board office. The affidavit must show that all amounts due to the Town of Lewisboro as real estate taxes and special assessments on the total area encompassed by the application, together with all penalties and interest thereon, have been paid.

Under New York State law, the Westchester County Clerk may not accept any subdivision map for filing unless the same type of affidavit from the Town of Lewisboro Receiver of Taxes is submitted by the applicant at the time of filing.

This form must be completed by the applicant and must accompany all applications to the Planning Board. Upon receipt, the Planning Board Secretary will send the form to the Receiver of Taxes for signature and notarization. If preferred, the applicant may directly obtain the signature of the Receiver of Taxes and notarization prior to submission.

To Be Completed by Applicant
(Please type or print)

Lake Kitchawan Assoc.
Name of Applicant

Dry Hydrant Reservation
Project Name

Property Description

Tax Block(s): 10287

Tax Lot(s): 22

Tax Sheet(s): 42

Property Assessed to:

Lake Kitchawan Assoc, Inc.
Name

PO Box 261
Address

So Salem NY 10590
City State Zip

The undersigned, being duly sworn deposes and says that a search of the tax records in the office of the Receiver of Taxes, Town of Lewisboro, reveals that all amounts due to the Town of Lewisboro as real estate taxes and special assessments, together with all penalties and interest thereon, affecting the premises described below, have been paid.

Signature - Receiver of Taxes: [signature] 11/7/2016
Date

Sworn to before me this

7th **day of** Nov., 2016

JANET L. DONOHUE
NOTARY PUBLIC, STATE OF NEW YORK
No. 01DO6259627
Qualified in Westchester County
Commission Expires April 16, 2020

[signature]
Signature - Notary Public (affix stamp)

TOWN OF LEWISBORO PLANNING BOARD

PO Box 725, 20 North Salem Road, Cross River, NY 10518
Email: planning@lewisborogov.com
Tel: (914) 763-5592
Fax: (914) 763-3637

Affidavit of Ownership

State of: New York

County of: Westchester

Joseph Nola, being duly sworn, deposes and says that he/she

resides at 27 Grandview Road, South Salem

in the County of Westchester, State of N.Y.

and that he/she is (check one) ____ the owner, or ✓ the President
Title

of The Lake Kitchawan Association
Name of corporation, partnership, or other legal entity

which is the owner, in fee of all that certain log, piece or parcel of land situated, lying and being in the Town of Lewisborro, New York, aforesaid and know and designated on the Tax Map in the Town of Lewisboro as:

Block 10287, Lot 22, on Sheet 42.

Owner's Signature
by Joseph M. Nola president,
Lake Kitchawan Association

Sworn to before me this

7th **day of** November, 2016

SAMANTHA L INCLEDON
Notary Public - State of New York
No. 01IN6304669
Qualified In Westchester County
My Commission Expires June 2, 2015

Notary Public – affix stamp

Dry Hydrant

For

Vista Fire District

Location: # Lake Kitchawan

South Salem (Vista) NY 10590

Material List

65' 8" PVC Pipe Schedule 40 PVC

2 8" 45 (degree) Elbow Slip x Slip Fitting Schedule 40 PVC

1 6" Female Adaptor (Fire Dept. Connection) with end plug

1 8" Barrel Strainer with back flush

1 Reflective Dry Hydrant Sign Assembly

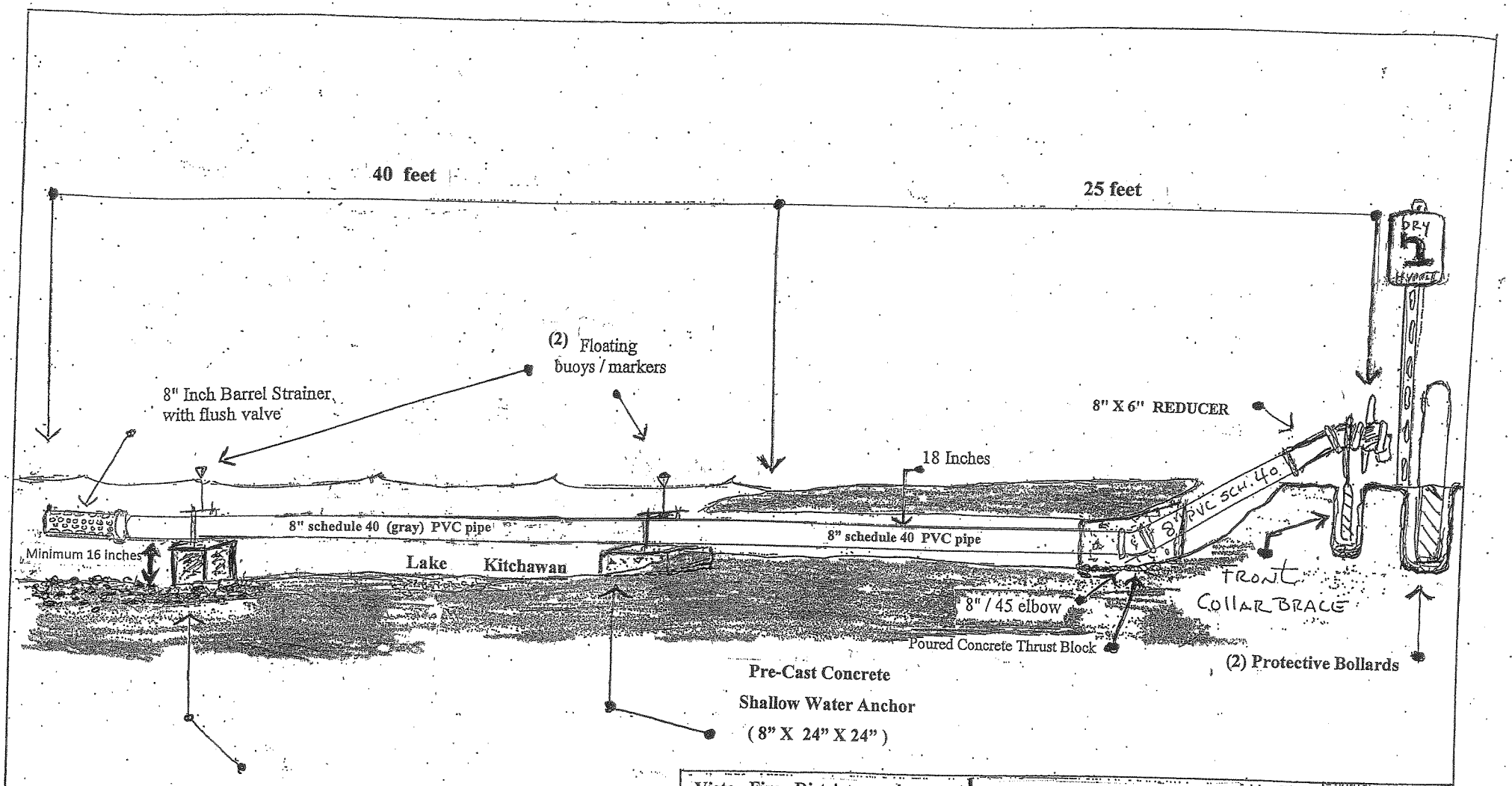

Drawing not to scale

Vista Fire District Dry Hydrant Project Sketch/drawings Michael J Lombardi Date: - October 11, 2016	Lake Kichawan Assoc. Inc. 166 Kitchawan Road South Salem (Vista) NY 10590 Lot: 22 Block: 10287 Sheet: 42	Page/ A-1

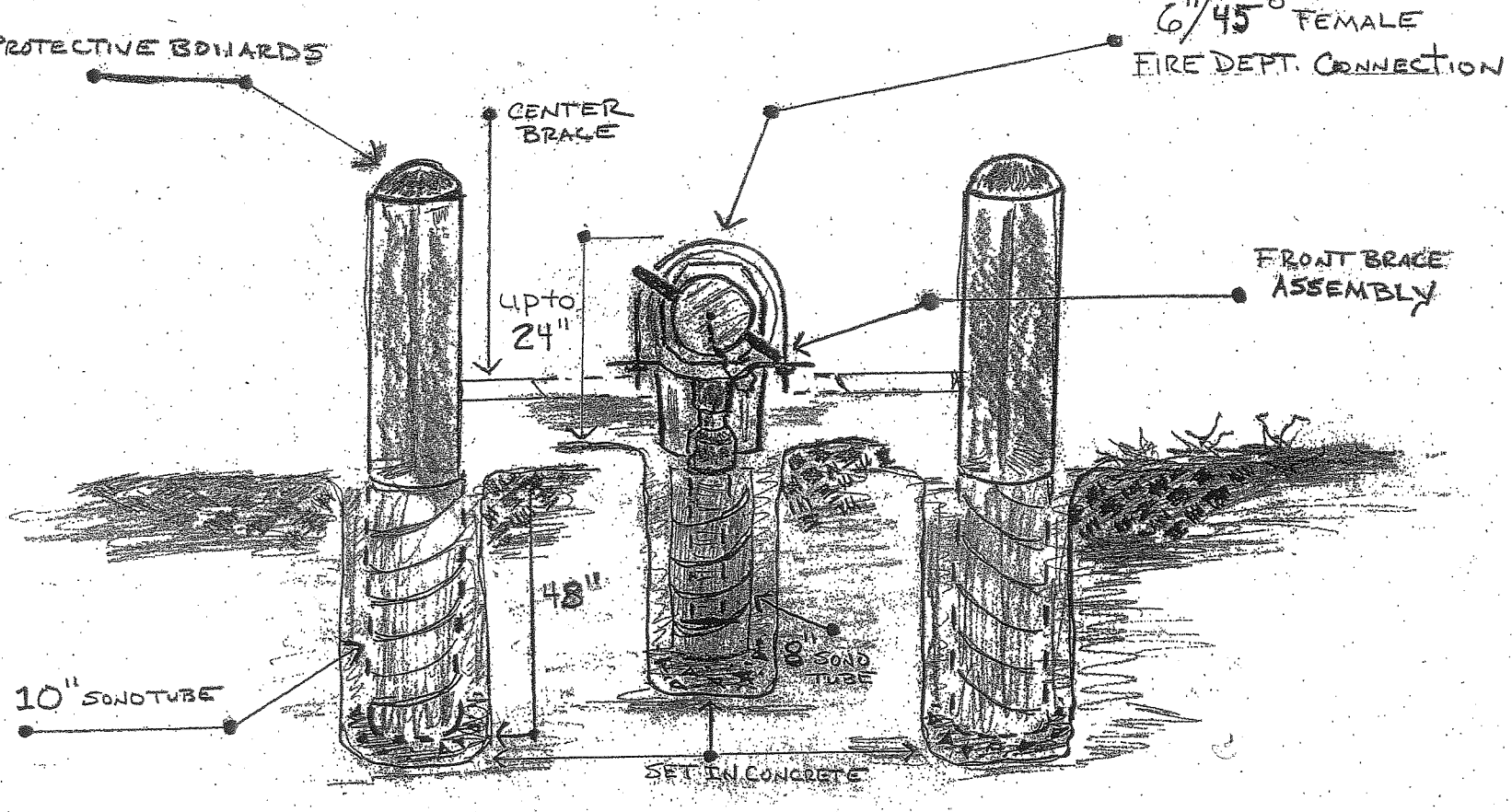

Vista Fire District Dry Hydrant Project Sketch/drawings Michael J Lombardi Date: October 11, 2016	Lake Kichawan Assoc. Inc. 166 Kitchawan Road South Salem (Vista) NY 10590 Lot: 22 Block: 10287 Sheet: 42	Page/ A-2

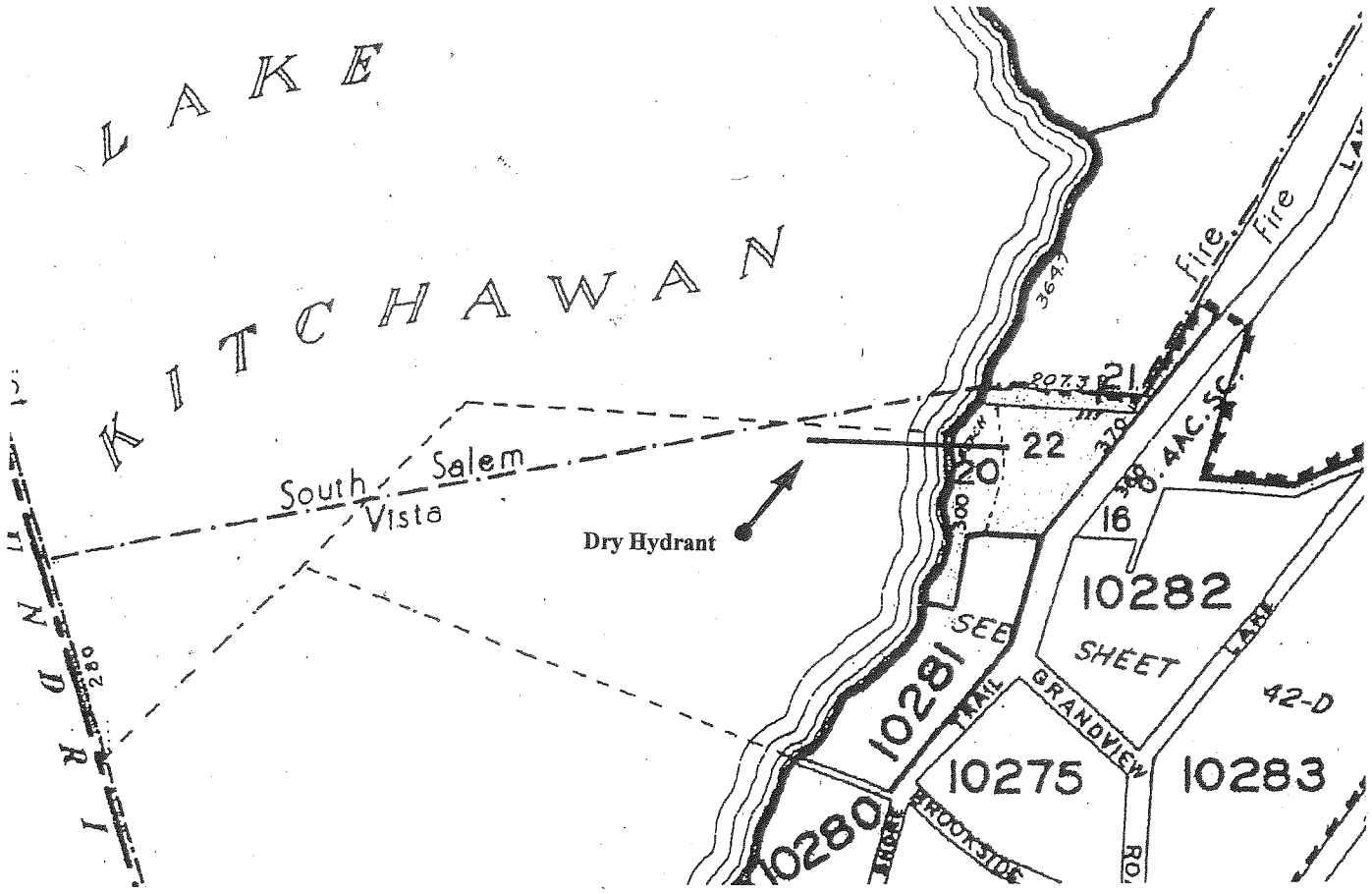

Vista Fire District **Dry Hydrant Project** **Sketch/drawings** **Michael J Lombardi** **Date:** October 11, 2016	**Lake Kichawan Assoc. Inc.** **166 Kitchawan Road** **South Salem (Vista) NY 10590** **Lot: 22 Block: 10287 Sheet: 42**	**Page/** **A-3**

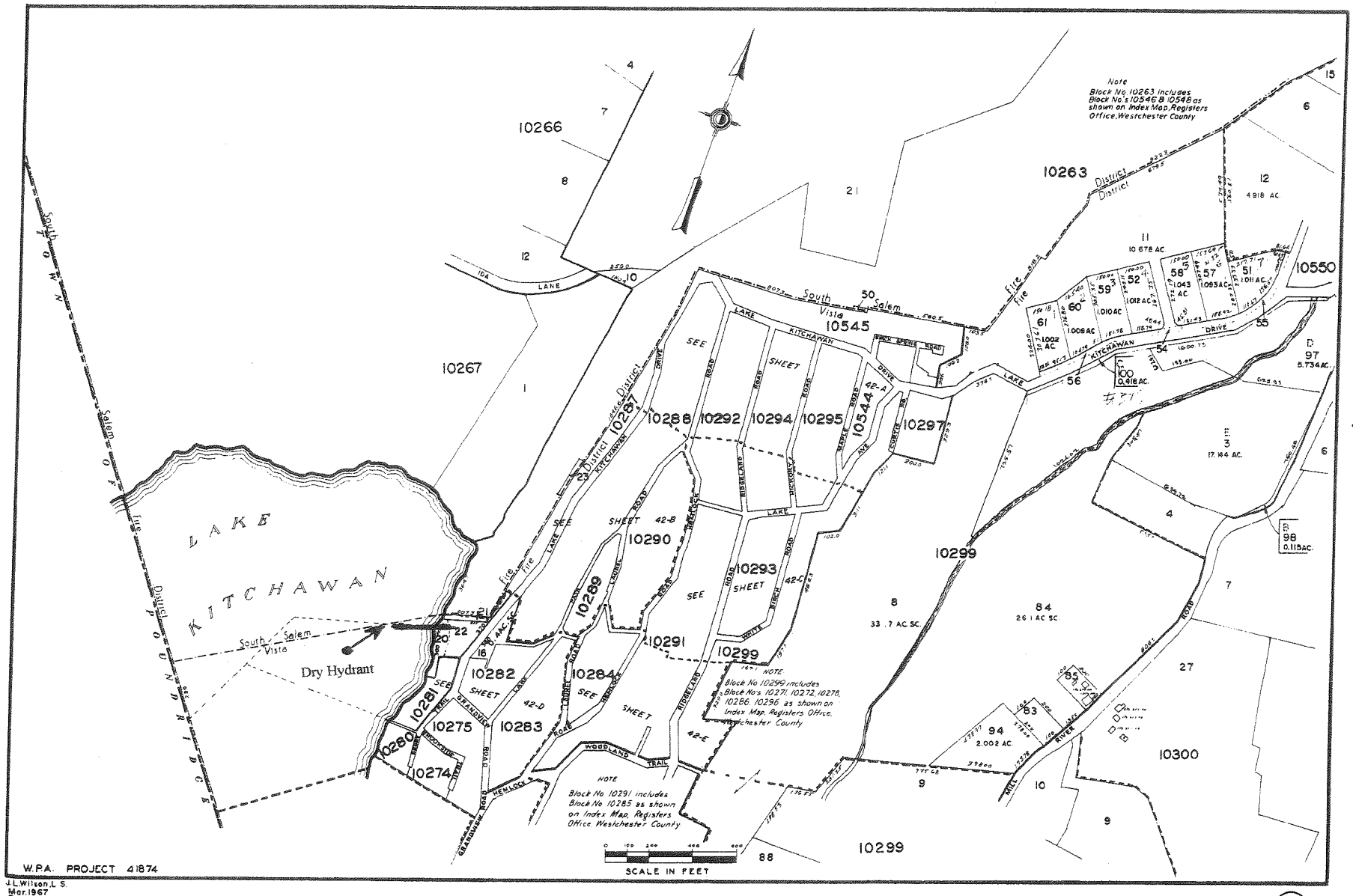
41
40
43
45
LAKE KITCHAWAN
Dry Hydrant
South Vista
Salem
Note
Block No. 10263 includes Block No's 10546 & 10548 as shown on Index Map, Registers Office, Westchester County
NOTE
Block No 10299 includes Block No's 10271, 10272, 10278, 10286, 10296 as shown on Index Map, Registers Office, Westchester County
NOTE
Block No 10291 includes Block No 10285 as shown on Index Map, Registers Office, Westchester County
SCALE IN FEET
W.P.A. PROJECT 41874
J.L.Willson, L.S.
Mar.1967
Feb.1972
Mar. 1985
TOWN OF LEWISBORO
42

KELLARD SESSIONS
CONSULTING, P.C.

John Kellard, P.E.
David Sessions, RLA, AICP

MEMORANDUM

TO: Chairman Jerome Kerner, AIA and
Members of Lewisboro Planning Board

CC: Ciorsdan Conran
Judson Siebert, Esq.

FROM: Jan K. Johannessen, AICP
Joseph M. Cermele, P.E., CFM
David J. Sessions, RLA, AICP
Town Consulting Professionals

DATE: December 14, 2016

RE: Wetland Permit
Tracey Weisberg
25 Benedict Road
Sheet 33, Block 11155, Lot 153

Project Description

The subject property is located on Benedict Road and consists of ±12.4 acres of land. The subject property is currently developed with single-family residence, detached barn, driveway, pool, septic system and potable water well. The property contains a pond and wetlands regulated by both the Town of Lewisboro and the New York State Department of Environmental Conservation (NYSDEC). The applicant is proposing to restore and enhance the on-site pond by replacing the existing wood dam with a concrete dam to better control the historic water level.

SEQRA

The proposed action is a Type II Action and is categorically exempt from the State Environmental Quality Review Act (SEQRA).

Required Approvals

1. A Wetland Activity Permit is required from the Planning Board.

2. A public hearing is required to be held on the Wetland Activity Permit.

3. The New York City Department of Environmental Protection (NYCDEP) issued a Crossing, Piping and Diversion Permit, expiring October 28, 2021.

4. An Article 24 Freshwater Wetland Permit has been issued by the NYSDEC, expires December 31, 2017.

5. If disturbance exceeds 5,000 s.f., a Town Stormwater Permit and coverage under the NYSDEC SPDES General Permit for Stormwater Discharges from Construction Activity (GP-0-15-002) will be required.

6. According to a letter prepared by the Army Corps of Engineers (ACOE), the proposed project falls under Nationwide Permits #3 and #27, expiring March 17, 2017.

Project History

The application was originally before the Board in July of 2013 and included the above-described dam and footbridge improvements, along with an invasive plant removal and planting plan. During the course of Planning Board review, it was determined that the dam-related work would trigger a number of permits from outside agencies, including the NYSDEC, NYCDEP and ACOE. In the spring of 2015, the applicant requested that the Planning Board review the invasive plant removal and replanting component of the project only. The Board ultimately determined the plant restoration component of the project could be permitted administratively through our office; Wetland Permit #56-13 W.P. was issued on June 9, 2015 for this work and, according to the applicant, has been completed. The applicant has since obtained all necessary outside agency approvals and has reapplied to the Planning Board for the dam related work; our review of the plans indicate that the dam work is consistent with that previously proposed and reviewed.

Comments

1. The applicant submitted the incorrect application. The applicant should submit the application for a Wetland Permit, as opposed to Site Development Plan Approval.

2. The majority of the comments contained within our July 12, 2013 review memorandum have been addressed.

3. As previously requested, a detail of the footbridge and its restoration should be included on the plans.

4. The plans should be revised to include a limits of disturbance line and an area of disturbance calculation; this area should include construction access. If disturbance is ≥5,000 s.f., the applicant must submit a Town Stormwater Permit Application, a NYSDEC Notice of Intent (NOI), and NYSDEC MS4 SWPPP Acceptance Form for review.

Plans Reviewed, prepared by John Meyer Consulting, P.C.:

- Pond Wood Dam Existing Conditions – Detail (S1d), dated September 16, 2016
- Site Plan, Access, Temporary Coffer Dam and Dewatering Plan (S3), dated (last revised) October 20, 2016
- Details (D-3), dated September 16, 2016

Documents Reviewed:

- Letter, prepared by John Meyer Consulting, P.C., dated November 18, 2016
- Step II Application
- Short Environmental Assessment Form, dated November 18, 2016
- NYCDEP Approval, dated October 28, 2016
- ACOE Approval, dated February 28, 2014
- NYSDEC Permit, dated December 23, 2013
- NYSDEC Permit Modification, dated December 3, 2015

JKJ/JMC/DJS/dc

T:\Lewisboro\Correspondence\LW4074JJ-LWPB-Weisberg-Review-Memo-12-14-16.docx

TO: Town of Lewisboro Planning Board

FROM: Lewisboro Conservation Advisory Council

SUBJECT: Weisberg Residence Dam, Cal #58-16PB
Sheet 33, Block 11155, Lot 153
25 Benedict Rd South Salem, NY 10590

DATE: 12/10/2016

The Conservation Advisory Council has reviewed the materials submitted for wetland activity permit for the Weisberg property at 25 Benedict Road. The applicant plans to replace a wooden dam with a concrete and stone dam. The size of the impounded pond is not given but appears to be about 160' by 110' and less than 4' deep.

The plans appear to be to build a coffer dam to enable construction, which limit our concerns about downstream flooding from lowering the pond levels. It also appears that the applicant is not intending to deepen or dredge the pond as part of this application. The CAC would appreciate confirmation that we understand the scope of the application correctly.

The applicant has planned mitigation which consists of removing invasive plants and planting mostly native plants. Some of these plants will be planted in the pond. Water garden plants like *Nymphaea odorata*, *Nuphar luteum*, and *Ponterderia cordata,* although native, have been known to harbor invasive plants and animals in their root balls. We understand that this risk can be minimized by rinsing the roots free of soil over an upland portion of land that does not flow into a wetland. The CAC asks that this approach, or an approach that the Town's consultants might advise, be followed to limit the risk of any transport of invasives with these beneficial plantings.

The outflow of this pond feeds into the upper section of a stream that is used by both white sucker and brook trout for spawning purposes. The suckers spawn in the April time frame when water temperature is at 37-45 degrees and the brook trout spawn in the October time frame when water temperatures are between 40 and 47 degrees. Therefore, to minimize the danger of silting at spawning periods we would like to see this work done during low water periods and away from spawning periods. By mid May the sucker eggs will have hatched and they will have grown to be fingerlings and out of danger from silting. Therefore, we would suggest that the work be done between mid May and early September if possible.

Site Planning
Civil Engineering
Landscape Architecture
Land Surveying
Transportation Engineering

Environmental Studies
Entitlements
Construction Services
3D Visualization
Laser Scanning

November 18, 2016

Honorable Chairman Jerome Kerner and
Members of the Planning Board
Cross River Shopping Center at Orchard Square
Suite L / Lower Level
20 North Salem Road
Cross River, NY 10518

RE: JMC Project 15225
Weisberg Residence Dam
25 Benedict Road
Town of Lewisboro, NY

Site Development Plan Application

Dear Chairman Kerner and Members of the Board:

On behalf of the owner, Tracy Weisberg, we are pleased to submit the following documents in support of a Site Development Plan Application to replace a dam on the subject property.

1. Letter to the Town of Lewisboro from Tracey B. Weisberg, dated 11/11/2016, regarding Wetlands Permit.

2. Site Development Plan Application, dated 11/18/2016.

3. Tax Payment Affidavit

4. Short Environmental Assessment Form, dated 11/18/2016.

5. NYSDEC Freshwater Wetlands and Water Quality Certification Permits, effective 12/23/2013.

6. Letter to Tracy Weisberg from NYSDEC, dated 12/03/2015, regarding Permit Modification.

7. U.S. Army Corps of Engineers Permit File Number NAN-2013-01492-EMC issued 02/28/2014.

8. Letter to David P. Lombardi from NYCDEP, dated 10/28/2016, regarding Crossing Piping or Diversion Permit.

9. Wetland Implementation Permit #56-13 W.P., issued 06/09/2015.

10. Five full size and four 11"x17" copies of:

Dwg. No.	Title	Rev. #/Date
S1d	"Pond Wood Dam Existing Conditions-Detail"	09/16/2016
S3	"Site Plan, Access, Temporary Coffer Dam and Dewatering Plan"	1 10/20/2016
D3	"Details"	09/16/2016

We have also enclosed a check in the amount of $255.00 payable to the Town of Lewisboro Planning Board for the Wetland Activity Permit Application Fee.

The work proposed under the Wetland Implementation Permit has been completed. This application is for the replacement of an existing wood dam with a concrete dam and refurbishment of a wood foot bridge.

We look forward to appearing before the Board on December 20th. If you have any questions or require any additional information, please do not hesitate to contact us at (914) 273-5225.

Sincerely,

JMC Planning Engineering Landscape Architecture & Land Surveying PLLC

David P. Lombardi, PE
Senior Project Manager

cc: Ms. Tracy B. Weisberg, w/enc.
Mr. Jay Archer, w/enc.

f:\2015\15225\ltkerner 11-18-2016.docx

November 11, 2016

To: Town of Lewisboro

Re: Wetlands Permit

Jay Archer, Green Jay Landscaping and David P. Lombardi, PE, JMC Site Development have been acting on my behalf to procure all the appropriate permits necessary for the Dam Project at 25 Benedict Road, South Salem, NY. (11155/153/33) I have appointed them to continue as my agents in this process with the Town Of Lewisboro.

In addition, I have an already established escrow account with The Town of Lewisboro. I provided a check # 9042 in the amount of $ 2,000 on June 15, 2013. I have not received notification of expenses taken against this or the need for additional funds.

If you have questions please contact me via phone at 914-552-3282!

Sincerely,

Tracey B Weisberg

Tracey B Weisberg

TOWN OF LEWISBORO PLANNING BOARD

PO Box 725, 20 North Salem Road, Cross River, NY 10518 Email: planning@lewisborogov.com Tel: (914) 763-5592

Site Development Plan/Subdivision Plat Application – Check all that apply:

Waiver of Site Development Plan Procedures	☐		
Site Development Plan Approval	Step I ☐	Step II ☑	
Special Use Permit Approval	Step I ☐	Step II ☐	
Subdivision Plat Approval	Step I ☐	Step II ☐	Step III ☐

Project Information

Project Name: Weisberg Residence Dam

Project Address: 25 Benedict Road, South Salem, NY

Gross Parcel Area: 4.000 Zoning District: R-2A Sheet(s): 33 Block (s): 11155 Lot(s): 153

Project Description: Replacement of existing wood dam with concrete dam and refurbishment of wood foot bridge.

Is the site located within 500 feet of any Town boundary?	YES ☐	NO ☑
Is the site located within the New York City Watershed?	YES ☑	NO ☐
Is the site located on a State or County Highway?	YES ☐	NO ☑

Does the proposed action require any other permits/approvals from other agencies/departments?

Town Board	☐	ZBA	☐	Building Dept.	☐	Town Highway	☐
ACARC	☐	NYSDEC	☑	NYCDEP	☑	WCDH	☐
NYSDOT	☐	Town Wetland	☑	Town Stormwater	☐		

Other USACOE

Owner's Information

Name: Tracey B. Weisberg Email: tratin370@earthlink.net

Address: 13409 Pino Canyon Place NE, Albuquerque, NM, 87111 Phone: (914) 552-3282

Applicant's Information (if different)

Name: Email:

Address: Phone:

Authorized Agent's Information

Name: David P. Lombardi, PE Email: dlombardi@jmcpllc.com

Address: JMC 120 Bedford Road, Armonk, NY 10504 Phone: (914) 273-5225

THE APPLICANT understands that any application is considered complete only when all information and documents required have been submitted and received by the Planning Board. The applicant further understands that the applicant is responsible for the payment of all application and review fees incurred by the Planning Board.

THE UNDERSIGNED WARRANTS the truth of all statements contained herein and in all supporting documents according to the best of his/her knowledge and belief, and authorizes visitation and inspection of the subject property by the Town of Lewisboro and its agents.

APPLICANT'S SIGNATURE David P. Lombardi Agent DATE 11/18/16

OWNER'S SIBNATURE DATE

617.20
Appendix B
Short Environmental Assessment Form

Instructions for Completing

Part 1 - Project Information. The applicant or project sponsor is responsible for the completion of Part 1. Responses become part of the application for approval or funding, are subject to public review, and may be subject to further verification. Complete Part 1 based on information currently available. If additional research or investigation would be needed to fully respond to any item, please answer as thoroughly as possible based on current information.

Complete all items in Part 1. You may also provide any additional information which you believe will be needed by or useful to the lead agency; attach additional pages as necessary to supplement any item.

Part 1 - Project and Sponsor Information		
Name of Action or Project: Weisberg Residence Dam		
Project Location (describe, and attach a location map): 25 Benedict Road, Town of Lewisboro, NY		
Brief Description of Proposed Action: Replacement of existing wood dam with a concrete dam and refurbishment of wood foot bridge.		
Name of Applicant or Sponsor: Tracey B. Weisberg	Telephone: (914) 552-3382 E-Mail: tratin370@earthlink.net	
Address: 13409 Pino Canyon Place NE		
City/PO: Albuquerque	State: NM	Zip Code: 87111

	NO	YES
1. Does the proposed action only involve the legislative adoption of a plan, local law, ordinance, administrative rule, or regulation? If Yes, attach a narrative description of the intent of the proposed action and the environmental resources that may be affected in the municipality and proceed to Part 2. If no, continue to question 2.	X	
2. Does the proposed action require a permit, approval or funding from any other governmental Agency? If Yes, list agency(s) name and permit or approval: NYCDEP Crossing, Piping and Diversion Permit (CPDP), NYSDEC Freshwater Wetlands Permit, USACOE Nationwide General Permit Number 3, Maintenance		X

3.a. Total acreage of the site of the proposed action? 4.000 acres
b. Total acreage to be physically disturbed? ±0.02 acres
c. Total acreage (project site and any contiguous properties) owned or controlled by the applicant or project sponsor? 12.357 acres

4. Check all land uses that occur on, adjoining and near the proposed action.
☐ Urban ☐ Rural (non-agriculture) ☐ Industrial ☐ Commercial ☒ Residential (suburban)
☒ Forest ☐ Agriculture ☐ Aquatic ☐ Other (specify): _____
☐ Parkland

	NO	YES	N/A
5. Is the proposed action, a. A permitted use under the zoning regulations?			X
b. Consistent with the adopted comprehensive plan?			X

	NO	YES
6. Is the proposed action consistent with the predominant character of the existing built or natural landscape?		X
7. Is the site of the proposed action located in, or does it adjoin, a state listed Critical Environmental Area? If Yes, identify: _____	X	
8. a. Will the proposed action result in a substantial increase in traffic above present levels?	X	
b. Are public transportation service(s) available at or near the site of the proposed action?	X	
c. Are any pedestrian accommodations or bicycle routes available on or near site of the proposed action?	X	
9. Does the proposed action meet or exceed the state energy code requirements? If the proposed action will exceed requirements, describe design features and technologies: _____		X
10. Will the proposed action connect to an existing public/private water supply? [If Yes, does the existing system have capacity to provide service? ☐ NO ☐ YES] If No, describe method for providing potable water: N/A	X	
11. Will the proposed action connect to existing wastewater utilities? [If Yes, does the existing system have capacity to provide service? ☐ NO ☐ YES] If No, describe method for providing wastewater treatment: N/A	X	
12. a. Does the site contain a structure that is listed on either the State or National Register of Historic Places?	X	
b. Is the proposed action located in an archeological sensitive area? Area previously disturbed		X
13. a. Does any portion of the site of the proposed action, or lands adjoining the proposed action, contain wetlands or other waterbodies regulated by a federal, state or local agency?		X
b. Would the proposed action physically alter, or encroach into, any existing wetland or waterbody? If Yes, identify the wetland or waterbody and extent of alterations in square feet or acres: _____ NYSDEC Wetland L-14. The extent of alterations is 0.01 acres.		X

14. Identify the typical habitat types that occur on, or are likely to be found on the project site. Check all that apply:
☐ Shoreline ☐ Forest ☐ Agricultural/grasslands ☐ Early mid-successional
☒ Wetland ☐ Urban ☒ Suburban

	NO	YES
15. Does the site of the proposed action contain any species of animal, or associated habitats, listed by the State or Federal government as threatened or endangered?	X	
16. Is the project site located in the 100 year flood plain?		X
17. Will the proposed action create storm water discharge, either from point or non-point sources? If Yes, a. Will storm water discharges flow to adjacent properties? ☐ NO ☐ YES	X	
b. Will storm water discharges be directed to established conveyance systems (runoff and storm drains)? If Yes, briefly describe: ☐ NO ☐ YES		

	NO	YES
18. Does the proposed action include construction or other activities that result in the impoundment of water or other liquids (e.g. retention pond, waste lagoon, dam)? If Yes, explain purpose and size: Existing dam to be replaced.		X
19. Has the site of the proposed action or an adjoining property been the location of an active or closed solid waste management facility? If Yes, describe:	X	
20. Has the site of the proposed action or an adjoining property been the subject of remediation (ongoing or completed) for hazardous waste? If Yes, describe:	X	

I AFFIRM THAT THE INFORMATION PROVIDED ABOVE IS TRUE AND ACCURATE TO THE BEST OF MY KNOWLEDGE

Applicant/sponsor name: JMC Planning Engineering Landscape Architecture & Land Surveying, PLLC, Agent Date: 11/18/16

Signature: David P. Imbardi

Part 2 - Impact Assessment. The Lead Agency is responsible for the completion of Part 2. Answer all of the following questions in Part 2 using the information contained in Part 1 and other materials submitted by the project sponsor or otherwise available to the reviewer. When answering the questions the reviewer should be guided by the concept "Have my responses been reasonable considering the scale and context of the proposed action?"

	No, or small impact may occur	Moderate to large impact may occur
1. Will the proposed action create a material conflict with an adopted land use plan or zoning regulations?		
2. Will the proposed action result in a change in the use or intensity of use of land?		
3. Will the proposed action impair the character or quality of the existing community?		
4. Will the proposed action have an impact on the environmental characteristics that caused the establishment of a Critical Environmental Area (CEA)?		
5. Will the proposed action result in an adverse change in the existing level of traffic or affect existing infrastructure for mass transit, biking or walkway?		
6. Will the proposed action cause an increase in the use of energy and it fails to incorporate reasonably available energy conservation or renewable energy opportunities?		
7. Will the proposed action impact existing: a. public / private water supplies?		
b. public / private wastewater treatment utilities?		
8. Will the proposed action impair the character or quality of important historic, archaeological, architectural or aesthetic resources?		
9. Will the proposed action result in an adverse change to natural resources (e.g., wetlands, waterbodies, groundwater, air quality, flora and fauna)?		

	No, or small impact may occur	Moderate to large impact may occur
10. Will the proposed action result in an increase in the potential for erosion, flooding or drainage problems?		
11. Will the proposed action create a hazard to environmental resources or human health?		

Part 3 - Determination of significance. The Lead Agency is responsible for the completion of Part 3. For every question in Part 2 that was answered "moderate to large impact may occur", or if there is a need to explain why a particular element of the proposed action may or will not result in a significant adverse environmental impact, please complete Part 3. Part 3 should, in sufficient detail, identify the impact, including any measures or design elements that have been included by the project sponsor to avoid or reduce impacts. Part 3 should also explain how the lead agency determined that the impact may or will not be significant. Each potential impact should be assessed considering its setting, probability of occurring, duration, irreversibility, geographic scope and magnitude. Also consider the potential for short-term, long-term and cumulative impacts.

☐ Check this box if you have determined, based on the information and analysis above, and any supporting documentation, that the proposed action may result in one or more potentially large or significant adverse impacts and an environmental impact statement is required.

☐ Check this box if you have determined, based on the information and analysis above, and any supporting documentation, that the proposed action will not result in any significant adverse environmental impacts.

Name of Lead Agency	Date
Print or Type Name of Responsible Officer in Lead Agency	Title of Responsible Officer
Signature of Responsible Officer in Lead Agency	Signature of Preparer (if different from Responsible Officer)

PERMIT

Under the Environmental Conservation Law (ECL)

Permittee and Facility Information

Permit Issued To:
TRACEY WEISBERG
25 BENEDICT RD

SOUTH SALEM, NY 10590
(914) 555-3282

Facility:
WEISBERG PROPERTY
25 BENEDICT RD - 2000 FT S OF WACCABUC LAKE
LEWISBORO, NY 10590

Facility Location: in LEWISBORO in WESTCHESTER COUNTY
Facility Principal Reference Point: NYTM-E: 619.349 NYTM-N: 4571.935
Latitude: 41°17'24.2" Longitude: 73°34'28.7"
Authorized Activity: Disturbance to NYS Freshwater Wetland L-14 (Class 2) associated with restoration of an existing pond impounding Truesdale Stream (Class C), including: 1) in-place dam replacement with no change in water level, 2) in-kind, in-place footbridge repair, 3) removal of invasive species, and 4) restoration of native vegetation.

Permit Authorizations

Freshwater Wetlands - Under Article 24
Permit ID 3-5530-00207/00001
New Permit Effective Date: 12/23/2013 Expiration Date: 12/31/2015
Water Quality Certification - Under Section 401 - Clean Water Act
Permit ID 3-5530-00207/00002
New Permit Effective Date: 12/23/2013 Expiration Date: 12/31/2015

NYSDEC Approval

By acceptance of this permit, the permittee agrees that the permit is contingent upon strict compliance with the ECL, all applicable regulations, and all conditions included as part of this permit.

Permit Administrator: JAMES J ELDRED, Deputy Regional Permit Administrator
Address: NYSDEC REGION 3 HEADQUARTERS
21 SOUTH PUTT CORNERS RD
NEW PALTZ, NY 12561 -1620

Authorized Signature: _____ Date 12/23/2013

Distribution List

Heather Gierloff, NYSDEC Region 3 Bureau of Habitat
Michael Usai, NYCDEP

Permit Components

NATURAL RESOURCE PERMIT CONDITIONS

WATER QUALITY CERTIFICATION SPECIFIC CONDITION

GENERAL CONDITIONS, APPLY TO ALL AUTHORIZED PERMITS

NOTIFICATION OF OTHER PERMITTEE OBLIGATIONS

NATURAL RESOURCE PERMIT CONDITIONS - Apply to the Following Permits: FRESHWATER WETLANDS; WATER QUALITY CERTIFICATION

1. **Conformance With Plans** All activities authorized by this permit must be in strict conformance with the approved plans submitted by the applicant or applicant's agent as part of the permit application. Such approved plans were prepared by John Jay Landscape Development, revision 08/14/13.

2. **Conditions Prevail Over Plans** If any condition of this permit conflicts with the approved plans, the permit condition shall prevail over the plans.

3. **Work During Low Flows** All work shall be performed during low flow conditions.

4. **Notify DEC 48 Hrs Prior to Work** The permittee or a representative must contact by telephone Heather Gierloff at 845-256-3086 at least 48 hours prior to the commencement of the project authorized herein.

5. **Post Permit Sign** The permit sign enclosed with this permit shall be posted in a conspicuous location on the worksite and adequately protected from the weather.

6. **Install, Maintain Erosion Controls** Necessary erosion control measures, i.e., straw bales, silt fencing, etc., are to be placed on the downslope edge of any disturbed area. This sediment barrier is to be put in place before any disturbance of the ground occurs and is to be maintained in good and functional condition until thick vegetative cover is established.

7. **Water Clarity** Stream reaches downstream of construction areas shall always remain as clear (non-turbid) as the reaches upstream of the construction areas.

8. **Turbid Discharges** Visibly turbid discharges from land clearing, grading or excavation activities, or de-watering operations shall not enter the stream, navigable water, or wetland. Prior to entry into stream, navigable water or wetland, any such discharge shall be:

a. retained in an appropriately maintained upland settling basin;

b. filtered through crushed stone, sand, straw bales, silt screening (maximum opening size of U.S. Sieve Number 20), etc.; or,

c. directed to a grassy upland area a sufficient distance from the stream to prevent change in turbidity of the receiving water.

9. **Concrete Leachate** During construction, no wet or fresh concrete or leachate shall be allowed to escape into any wetlands or waters of New York State, nor shall washings from ready-mixed concrete trucks, mixers, or other devices be allowed to enter any wetland or waters. Only watertight or waterproof forms shall be used. Wet concrete shall not be poured to displace water within the forms.

10. **Temporary Stockpile Outside Regulated Area** Any temporary stockpile of excavated materials must be located outside the regulated wetland & adjacent area.

11. **Materials Disposed at Upland Site** Any demolition debris, excess construction materials, and/or excess excavated materials shall be immediately and completely disposed of on an approved upland site more than 100 feet from any regulated freshwater wetland. These materials shall be suitably stabilized so as not to re-enter any water body, wetland, or wetland adjacent area.

12. **Remove Cofferdam & Splash Pad At Completion of Work** Upon completion of work, the cofferdam & dewatering splash pad shall be removed.

13. **Temporary Mulch, Final Seeding** If seeding is impracticable due to the time of year, a temporary mulch shall be applied and final seeding shall be performed at the earliest opportunity when weather conditions favor germination and growth but not more than six months after project completion.

14. **Report Revegetation to DEC at Completion of Work** The permittee shall submit a revegetation report to Heather Gierloff at NYSDEC Region 3 Bureau of Habitat upon completion of work. The report shall include: representative photos & narrative of revegetation plan execution .

15. **Survival of Wetland Plantings** The permittee is responsible for replacement of lost wetland and/or wetland adjacent area plantings if the survival rate of the initial plantings is less than 85% within one year after planting.

16. **State Not Liable for Damage** The State of New York shall in no case be liable for any damage or injury to the structure or work herein authorized which may be caused by or result from future operations undertaken by the State for the conservation or improvement of navigation, or for other purposes, and no claim or right to compensation shall accrue from any such damage.

17. **State May Order Removal or Alteration of Work** If future operations by the State of New York require an alteration in the position of the structure or work herein authorized, or if, in the opinion of the Department of Environmental Conservation it shall cause unreasonable obstruction to the free navigation of said waters or flood flows or endanger the health, safety or welfare of the people of the State, or cause

loss or destruction of the natural resources of the State, the owner may be ordered by the Department to remove or alter the structural work, obstructions, or hazards caused thereby without expense to the State, and if, upon the expiration or revocation of this permit, the structure, fill, excavation, or other modification of the watercourse hereby authorized shall not be completed, the owners, shall, without expense to the State, and to such extent and in such time and manner as the Department of Environmental Conservation may require, remove all or any portion of the uncompleted structure or fill and restore to its former condition the navigable and flood capacity of the watercourse. No claim shall be made against the State of New York on account of any such removal or alteration.

18. **State May Require Site Restoration** If upon the expiration or revocation of this permit, the project hereby authorized has not been completed, the applicant shall, without expense to the State, and to such extent and in such time and manner as the Department of Environmental Conservation may lawfully require, remove all or any portion of the uncompleted structure or fill and restore the site to its former condition. No claim shall be made against the State of New York on account of any such removal or alteration.

19. **Precautions Against Contamination of Waters** All necessary precautions shall be taken to preclude contamination of any wetland or waterway by suspended solids, sediments, fuels, solvents, lubricants, epoxy coatings, paints, concrete, leachate or any other environmentally deleterious materials associated with the project.

WATER QUALITY CERTIFICATION SPECIFIC CONDITIONS

1. **Water Quality Certification** The NYS Department of Environmental Conservation hereby certifies that the subject project will not contravene effluent limitations or other limitations or standards under Sections 301, 302, 303, 306 and 307 of the Clean Water Act of 1977 (PL 95-217) provided that all of the conditions listed herein are met.

GENERAL CONDITIONS - Apply to ALL Authorized Permits:

1. **Facility Inspection by The Department** The permitted site or facility, including relevant records, is subject to inspection at reasonable hours and intervals by an authorized representative of the Department of Environmental Conservation (the Department) to determine whether the permittee is complying with this permit and the ECL. Such representative may order the work suspended pursuant to ECL 71- 0301 and SAPA 401(3).

The permittee shall provide a person to accompany the Department's representative during an inspection to the permit area when requested by the Department.

A copy of this permit, including all referenced maps, drawings and special conditions, must be available for inspection by the Department at all times at the project site or facility. Failure to produce a copy of the permit upon request by a Department representative is a violation of this permit.

2. **Relationship of this Permit to Other Department Orders and Determinations** Unless expressly provided for by the Department, issuance of this permit does not modify, supersede or rescind any order or determination previously issued by the Department or any of the terms, conditions or requirements contained in such order or determination.

3. **Applications For Permit Renewals, Modifications or Transfers** The permittee must submit a separate written application to the Department for permit renewal, modification or transfer of this permit. Such application must include any forms or supplemental information the Department requires. Any renewal, modification or transfer granted by the Department must be in writing. Submission of applications for permit renewal, modification or transfer are to be submitted to:

Regional Permit Administrator
NYSDEC REGION 3 HEADQUARTERS
21 SOUTH PUTT CORNERS RD
NEW PALTZ, NY12561 -1620

4. **Submission of Renewal Application** The permittee must submit a renewal application at least 30 days before permit expiration for the following permit authorizations: Freshwater Wetlands, Water Quality Certification.

5. **Permit Modifications, Suspensions and Revocations by the Department** The Department reserves the right to exercise all available authority to modify, suspend or revoke this permit. The grounds for modification, suspension or revocation include:

a. materially false or inaccurate statements in the permit application or supporting papers;

b. failure by the permittee to comply with any terms or conditions of the permit;

c. exceeding the scope of the project as described in the permit application;

d. newly discovered material information or a material change in environmental conditions, relevant technology or applicable law or regulations since the issuance of the existing permit;

e. noncompliance with previously issued permit conditions, orders of the commissioner, any provisions of the Environmental Conservation Law or regulations of the Department related to the permitted activity.

6. **Permit Transfer** Permits are transferrable unless specifically prohibited by statute, regulation or another permit condition. Applications for permit transfer should be submitted prior to actual transfer of ownership.

NOTIFICATION OF OTHER PERMITTEE OBLIGATIONS

Item A: Permittee Accepts Legal Responsibility and Agrees to Indemnification
The permittee, excepting state or federal agencies, expressly agrees to indemnify and hold harmless the Department of Environmental Conservation of the State of New York, its representatives, employees, and agents ("DEC") for all claims, suits, actions, and damages, to the extent attributable to the permittee's acts or omissions in connection with the permittee's undertaking of activities in connection with, or operation and maintenance of, the facility or facilities authorized by the permit whether in compliance or not in compliance with the terms and conditions of the permit. This indemnification does not extend to any claims, suits, actions, or damages to the extent attributable to DEC's own negligent or intentional acts or omissions, or to any claims, suits, or actions naming the DEC and arising under Article 78 of the New York Civil Practice Laws and Rules or any citizen suit or civil rights provision under federal or state laws.

Item B: Permittee's Contractors to Comply with Permit
The permittee is responsible for informing its independent contractors, employees, agents and assigns of their responsibility to comply with this permit, including all special conditions while acting as the permittee's agent with respect to the permitted activities, and such persons shall be subject to the same sanctions for violations of the Environmental Conservation Law as those prescribed for the permittee.

Item C: Permittee Responsible for Obtaining Other Required Permits
The permittee is responsible for obtaining any other permits, approvals, lands, easements and rights-of-way that may be required to carry out the activities that are authorized by this permit.

Item D: No Right to Trespass or Interfere with Riparian Rights
This permit does not convey to the permittee any right to trespass upon the lands or interfere with the riparian rights of others in order to perform the permitted work nor does it authorize the impairment of any rights, title, or interest in real or personal property held or vested in a person not a party to the permit.

Item E: SEQR Unlisted Action, No Lead Agency, No Significant Impact Under the State Environmental Quality Review Act (SEQR), the project associated with this permit is classified as an Unlisted Action and the Department of Environmental Conservation has determined that it will not have a significant effect on the environment. Other involved agencies may reach an independent determination of environmental significance for this project.

New York State
Department of Environmental Conservation

NOTICE

The Department of Environmental Conservation (DEC) has issued permit(s) pursuant to the Environmental Conservation Law for work being conducted at this site. For further information regarding the nature and extent of work approved and any Department conditions on it, contact the DEC at 845/256-3054. Please refer to the permit number shown when contacting the DEC.

Permittee: TRACEY WEISBERG Permit No. 3-5530-00207-0000/

Effective Date: DECEMBER 23, 2013 Expiration date: DECEMBER 31, 2015

☐ Applicable if checked. No instream work allowed between October 1 & April 30

NOTE: This notice is **NOT** a permit.

ew York State Department of Environmental Conservation
vision of Environmental Permits, Region 3
South Putt Corners Road, New Paltz, NY 12561-1620
one: (845)256-3054• Fax: (845) 255-4659
bsite: www.dec.ny.gov

Joe Martens
Commissioner

IMPORTANT NOTICE TO ALL PERMITTEES

The permit you requested is enclosed. Please read it carefully and note the conditions that are included in it. The permit is valid for only that activity expressly authorized therein; work beyond the scope of the permit may be considered a violation of law and be subject to appropriate enforcement action. Granting of this permit does not relieve the permittee of the responsibility of obtaining any other permission, consent or approval from any other federal, state or local government which may be required.

Please note the expiration date of the permit. Application for permit renewal should be made well in advance of the expiration date (minimum of 30 days) and submitted to the Regional Permit Administrator at the above address. For SPDES, Solid Waste and Hazardous Waste Permits, renewals must be made at least 180 days prior to the expiration date.

☐ Applicable only if checked. Please note all work authorized under this permit is prohibited during trout spawning season commencing October 1 and ending April 30.

The DEC permit number & program ID number noted on page 1 under "Permit Authorization" of the permit are important and should be retained for your records. These numbers should be referenced on all correspondence related to the permit, and on any future applications for permits associated with this facility/project area.

If a permit notice sign is enclosed, you must post it at the work site with appropriate weather protection, as well as a copy of the permit per General Condition 1.

If the permit is associated with a project that will entail construction of new water pollution control facilities or modifications to existing facilities, plan approval for the system design will be required from the appropriate Department's regional Division of Water or delegated local Health Department, as specified in the State Pollutant Discharge Elimination System (SPDES) permit.

If you have any questions on the extent of work authorized or your obligations under the permit, please contact the staff person indicated below or the Division of Environmental Permits at the above address.

Jean McAvoy
Division of Environmental Permits, Region 3
Telephone (845)256- 3165

☐ Applicable only if checked for **STORMWATER SPDES INFORMATION**: We have determined that your project qualifies for coverage under the General Stormwater SPDES Permit. You must now file a Notice of Intent to obtain coverage under the General Permit. This form can be downloaded at: http://www.dec.ny.gov/chemical/43133.html

☐ Applicable only if checked for **MS4 Areas**: This site is within a MS4 area (Municipal Separate Storm Sewer System), therefore the SWPPP must be reviewed and accepted by the municipality. The MS-4 Acceptance Form must be submitted in addition to the Notice of Intent.

Send the completed form(s) to: NYS DEC, Stormwater Permitting, Division of Water, 625 Broadway, Albany, NY 12233-3505

In addition, DEC requests that you provide one electronic copy of the approved SWPPP directly to Natalie Brown, NYS DEC, 100 Hillside Avenue, Suite 1W, White Plains, NY 10603-2860

NEW YORK STATE DEPARTMENT OF ENVIRONMENTAL CONSERVATION

Region 3 Main Office
21 South Putt Corners Road, New Paltz, NY 12561-1620
P: (845) 256-3033 | F: (845) 255-3042
www.dec.ny.gov

December 3, 2015

Tracey Weisberg
13409 Pino Canyon Place NE
Albuquerque, NM 87111

RE: Permit No. 3-5530-00207/00001 (Freshwater Wetlands)
Permit No. 3-5530-00207/00002 (Water Quality Certification)

Dam replacement/Pond restoration/Invasive plant removal
Town of Lewisboro, Westchester County

PERMIT MODIFICATION

Dear Ms. Weisberg:

The NYS Department of Environmental Conservation (DEC) received a letter sent on your behalf by Anthony Guccione, Jr., dated November 20, 2015, requesting an extension of the above noted permit to restore and enhance your existing pond, by replacing the existing dam with no change in water level, in-kind, in-place footbridge repair, removal of invasive species, and planting of native vegetation. The permit, issued December 23, 2013, expires on December 31, 2015.

The letter notes that you request a two year extension of the existing permit and submits Check No. 1066 for $50.00 for the freshwater wetlands permit modification application fee. The letter indicates that you are still in the process of obtaining permits from the New York City Department of Environmental Protection and intend to commence work once those approvals are received.

Accordingly, the DEC hereby extends the expiration date of the above noted permit to December 31, 2017.

All other terms and conditions remain as written in the original permit issued. Please attach this extension to the front of the existing permit.

An updated permit sign is enclosed. If there are any questions regarding this modification, please contact Jean McAvoy at (845) 256-3165.

Sincerely,

Rebecca Crist
Deputy Regional Permit Administrator
Region 3

Encl: Permit sign
Ecc: Brian Drumm, Bureau of Habitat

New York State
Department of Environmental Conservation

NOTICE

The Department of Environmental Conservation (DEC) has issued permit(s) pursuant to the Environmental Conservation Law for work being conducted at this site. For further information regarding the nature and extent of work approved and any Department conditions on it, contact the DEC at 845/256-3054. Please refer to the permit number shown when contacting the DEC.

Permittee: TRACEY WEISBERG Permit No. 3-5540-00207/00001

Effective Date: 12/03/2015 Expiration date: 12/31/2017

☐ Applicable if checked. No instream work allowed between October 1 & April 30

NOTE: This notice is **NOT** a permit.

DEPARTMENT OF THE ARMY
NEW YORK DISTRICT, CORPS OF ENGINEERS
JACOB K. JAVITS FEDERAL BUILDING
NEW YORK, N.Y. 10278-0090

REPLY TO
ATTENTION OF

REGULATORY BRANCH

FEB 2 8 2014

SUBJECT: Permit Application File Number NAN-2013-01492-EMC By Weisberg, Tracey for dam maintenance and aquatic ecosystem restoration in an unnamed pond, part of the Lake Waccabuc watershed in Town of Lewisboro, Westchester County, New York

1. PERMITTEE:
Tracey Weisberg
25 Benedict Road
Lewisboro, New York 10590
914-555-3282

2. On October 25, 2013, the New York District of the U.S. Army Corps of Engineers received a request for Department of the Army authorization for the discharge of fill material into waters of the United States in association with the replacement of an existing wood dam with a new steel re-enforced poured concrete dam. Approximately 8 cubic yards of excavated materials will be placed on 3,000 square feet of the upland plant restoration area. Aquatic habitat restoration activities include the removal of invasive plants from a 15-foot buffer area around the perimeter of the pond and replanting with native plant species. The enclosed drawings indicate that the total impacts to waters of the United States would involve the discharge of 7.3 cubic yards of fill material into an unnamed pond, part of the Lake Waccabuc watershed. The site is located at 25 Benedict Road in the Town of Lewisboro, Westchester County, New York.

3. The specific applicant–provided details are as shown on the attached dated permit drawings.

4. This determination covers only the work described in the submitted material. Any major changes in the project may require additional authorizations from the New York District of the U.S. Army Corps of Engineers.

5. Based on the information submitted to this office and accomplishment of any required notification in accordance with the applicable federal requirements, our review of the subject work indicates that an individual Department of the Army permit is not required. It appears that the activities within the jurisdiction of this office could be accomplished under the following Department of the Army Nationwide General Permits: Number 3, MAINTENANCE; and Number 27, AQUATIC HABITAT RESTORATION, ESTABLISHMENT, AND ENHANCEMENT ACTIVITIES; in accordance with Section 404 of the Clean Water Act (33 USC 1344, as amended). The nationwide permits are prescribed at Reissuance of Nationwide Permits in the Federal Register dated February 21, 2012 (77 FR 10184). The subject work may be performed without further authorization from this office provided it complies with the permit conditions listed in Sections A through C, Number 3, MAINTENANCE; and Section A and Section B Number 27, AQUATIC HABITAT RESTORATION, ESTABLISHMENT, AND ENHANCEMENT

REGULATORY BRANCH FEB 2 8 2014

SUBJECT: Permit Application File Number NAN-2013-01492-EMC By Weisberg, Tracey for dam maintenance and aquatic ecosystem restoration in an unnamed pond, part of the Lake Waccabuc watershed in Town of Lewisboro, Westchester County, New York

ACTIVITIES; any applicable New York District regional conditions; the following work-specific Special Conditions listed below; and any applicable regional conditions added by the State of New York.

6. Other than the work-specific Special Conditions listed below, the 2012 nationwide general permits in the State of New York, including their final regional conditions, water quality certifications, and coastal zone concurrence statements are available at:

http://www.nan.usace.army.mil/Portals/37/docs/regulatory/geninfo/natp/NWP_PN_30MAY12.pdf

If you require a specific paper copy, please contact our Regulator-of-the-Day at 917-790-8511 to request one be mailed to you. Please be sure to have the above eighteen-character file number readily available when you call.

7. Work-specific Special Conditions:

(A) The permittee, and their agents, shall take actions to prevent construction materials, including debris, from entering any waterway to become drift or pollution hazards.

(B) The permittee shall contact the appropriate state and local government officials to ensure that the subject work is performed in compliance with their requirements.

(C) The permittee shall within 30 days of the completion of the regulated activity authorized by this permit and any mitigation work required by Special Condition, sign and submit the attached compliance certification form to this office.

8. Please note that this nationwide general permit (NWGP) verification is based on a preliminary jurisdictional determination (JD). A preliminary jurisdictional determination (JD) is not appealable. If you wish, prior to commencement of the authorized work you may request an approved jurisdictional determination (JD), which may be appealed, by contacting the New York District, US Army Corps of Engineers for further instructions. To assist you in this decision and address any questions you may have on the differences between preliminary and approved jurisdictional determinations, please review US Army Corps of Engineers Regulatory Guidance Letter Number 08-02, which can be found at:

http://www.usace.army.mil/Portals/2/docs/civilworks/RGLS/rgl08-02.pdf

9. This verification is valid until March 17, 2017, unless the nationwide general permits are modified, reissued, or revoked before then. This verification will remain valid until March 17, 2017, if the subject work activity complies with the terms of any subsequent modifications of the nationwide general permits. If the nationwide general permits are suspended, revoked, or modified in such a way that the subject activity would no longer comply with the terms and conditions of a nationwide general permit, and the proposed

FEB 2 8 2014

REGULATORY BRANCH
SUBJECT: Permit Application File Number NAN-2013-01492-EMC By Weisberg, Tracey for dam maintenance and aquatic ecosystem restoration in an unnamed pond, part of the Lake Waccabuc watershed in Town of Lewisboro, Westchester County, New York

work activity has commenced, or is under contract to commence, the permittee will have twelve (12) months from the date of such permit action to complete the regulated work.

10. In order for us to better serve you and others, please complete our Customer Service Survey located at:

http://corpsmapu.usace.army.mil/cm_apex/f?p=regulatory_survey

11. Any inquires should be directed to Courtney McCathern at 917-790-8091. Please be sure to have the above eighteen-character file number readily available when you call.

Stephan A. Ryba
Chief, Eastern Section

ENCLS

CF: Bill Meyer
John Jay Landscape Development
PO Box 268
Katonah, New York 10536

NATIONWIDE GENERAL PERMIT COMPLIANCE CERTIFICATION AND REPORT FORM

Permit File Number: NAN-2013-01492-EMC
Permittee: Weisberg, Tracey
Location: 25 Benedict Road, Town of Lewisboro, Westchester County, NY

Date Permit Letter Issued: FEB 2 8 2014

Within 30 days of the completion of the activity authorized by this nationwide general permit and any mitigation required in the verification letter, please sign this certification and return it to the address at the bottom of this form.

Please note that your permitted activity is subject to a compliance inspection by a U.S. Army Corps of Engineers representative. If you fail to comply with the permit's terms and conditions you are subject to permit suspension, modification or revocation.

I hereby certify that the work authorized by the above referenced nationwide general permit has been completed in accordance with the terms and conditions of said permit, and required mitigation was completed in accordance with the permit conditions.

Signature of Permittee _____ Date _____

FOLD THIS FORM INTO THIRDS, WITH THE BOTTOM THIRD FACING OUTWARD. TAPE IT TOGETHER AND MAIL TO THE ADDRESS BELOW OR FAX (212) 264-4260.

PLACE STAMP HERE

DEPARTMENT OF THE ARMY
NEW YORK DISTRICT CORPS OF ENGINEERS
JACOB K. JAVITS FEDERAL BUILDING
ATTN: CENAN-OP-RE
NEW YORK, NEW YORK 10278-0090

NAW - 2013 - 01492 - EWC 2 of 10

FEB 2 8 2014

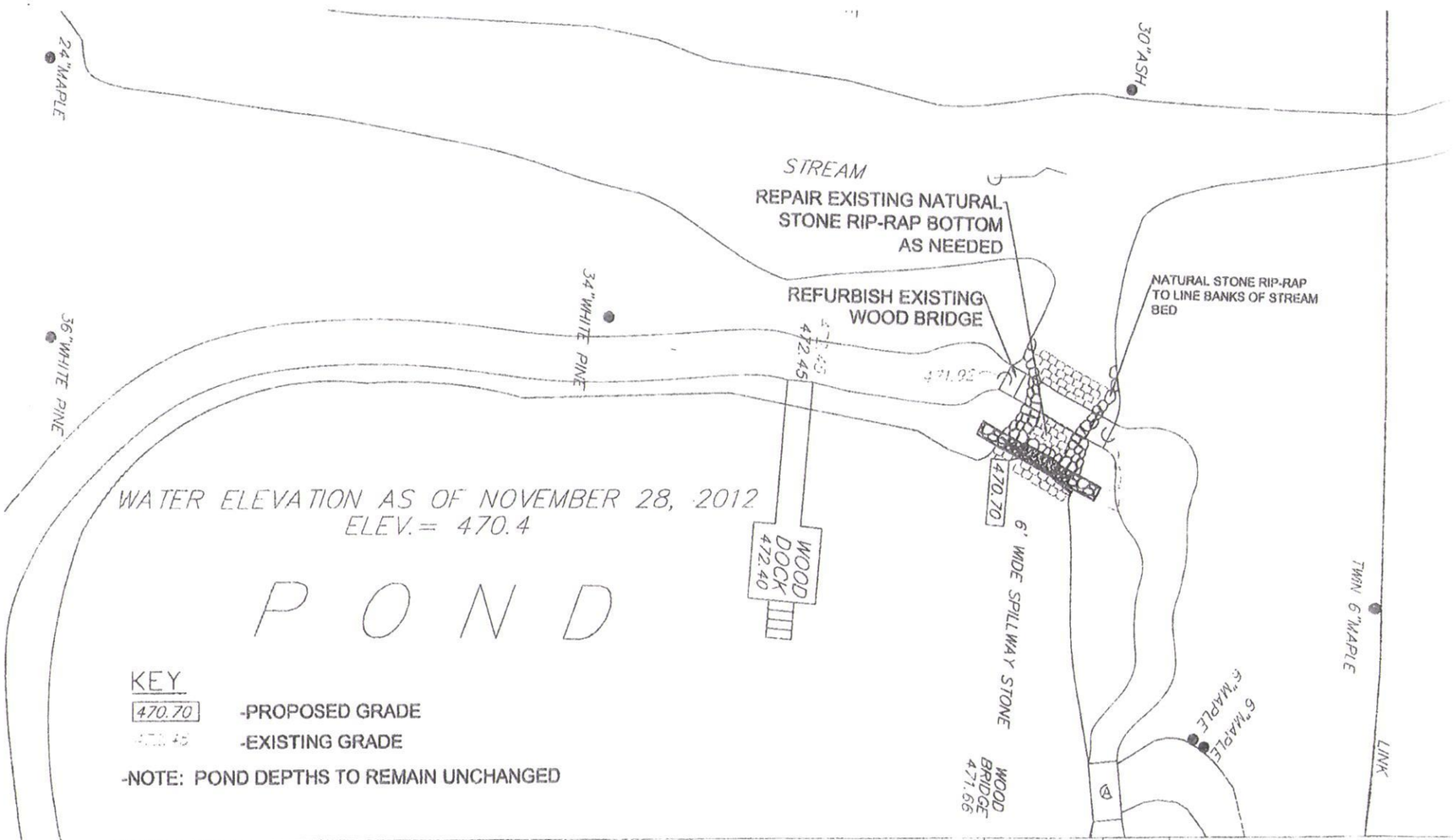

S2d

6-5-13

WEISBERG RESIDENCE - 25 BENEDICT ROAD, LEWISBORO, NY

PROPOSED DAM PLAN VIEW - DETAIL

10 SCALE

North

JOHN JAY
LANDSCAPE DEVELOPMENT
282 Katonah Ave. #268, Katonah NY 10536

NAN - 2013 - 01492 - EMC 10 of 10

FEB 2 8 2014

CONSTRUCTION SEQUENCING

1. OBTAIN ALL PERMITS AND APPROVALS FROM THE TOWN OF LEWISBORO, THE NYSDEC, AND ACOE.
2. CONDUCT A PRE-CONSTRUCTION SITE MEETING WITH THE TOWN WETLAND CONSULTANT (IF REQUIRED)
3. ESTABLISH MATERIALS DELIVERY AREA AT EXISTING WORK ROAD ENTRY
4. ESTABLISH ACCESS WAY FROM WORK ROAD TO CONSTRUCTION ENTRANCE WITH NO ADDITIONAL FILL OR STONE
5. INSTALL SILT FENCE AS PER PLAN AND TO ESTABLISH LIMITS OF DISTURBANCE AREA
6. REMOVE EXISTING 8" BOARD SECTIONS FROM DAM TO ALLOW POND TO DEWATER (LEAVING WOOD ANCHOR POSTS IN PLACE)
7. INSTALL TEMPORARY 24" DEWATERING PIPE AND SPLASH PAD
8. CONSTRUCT COFFER DAM TO TEMPORALLY DIVERT WATER FLOW AROUND DAM CONSTRUCTION AREA
9. INSTALL DEWATERING PIT IN COFFER DAM AREA
10. ESTABLISH TEMPORARY SOIL STOCKPILE AREA WITH SILT FENCE AND HAY BALE PROTECTION
11. REMOVE DAM ANCHOR POSTS AND WOOD FOOT BRIDGE (LEAVING FOOTBRIDGE ANCHOR POSTS IN PLACE)
12. COMMENCE AND COMPLETE CONCRETE DAM CONSTRUCTION AND STONE BANK STABILIZATION
13. COMMENCE AND COMPLETE WOOD FOOT BRIDGE RE-FERBISHMENT
14. RESTORE DEWATERING PIT AND REMOVE COFFER DAM FROM CONCRETE DAM CONSTRCUTION AREA
15. CONSTRUCT COFFER DAM TO DIVERT FLOW FROM AROUND 24" DEWATERING PIPE
16. REMOVE 24" DEWATERING PIPE AND RESTORE TO ORIGINAL GRADE AND REMOVE COFFER DAM
17. REMOVE INVASIVE PLANT SPECIES AS PER PLAN,
18. SPREAD DEWATERED EXCAVATION SPOILS OVER AREA TO BE RESTORED
19. REMOVE ANY EXCESS DEWATERD SPOILS OFF SITE.
20. SPREAD MEADOW SEED, AND LAY BIODEGRADABLE STRAW EROSION CONTROL BLANKETS.
21. INSTALL NEW NATIVE PLANTS THROUGH EROSION CONTROL BLANKETS AS SOON AS POSSIBLE
22. UPON MEADOW SEED ESTABLISHMENT AND COMPLETION OF PROJECT REMOVE SILT FENCE

MACHINARY TO BE EMPLOYED DURING CONSTRUCTION

1. 10 TON MINI EXCAVATOR WITH RUBBER TRACKS
2. SKID STEER WITH RUBBER TIRES
3. 3 TON DUMPTRUCK
4. CONCRETE PUMPER TRUCK

NAN -2013 - 61492 - EWC 8 of 10

FEB 2 8 2014

GENERAL CONSTRUCTION

SOIL AND EROSION CONTROL NOTES

GENERAL REQUIREMENTS

1. WORK CONDUCTED UNDER THE PERMIT SHALL BE OPEN TO INSPECTION AT ANY TIME, INCLUDING WEEKENDS AND HOLIDAYS, BY THE TOWN'S INSPECTOR, OR IT'S DESIGNATED REPRESENTATIVES(S).
2. PRIOR TO THE START OF EARTH WORK ACTIVITIES, THE TOWN WETLAND INSPECTOR OFFICER/ENVIRONMENTAL PLANNER MUST BE CONTACTED TO SCHEDULE A SITE INSPECTION TO CONFIRM THAT EROSION AND SEDIMENT CONTROL MEASURES HAVE BEEN PROPERLY INSTALLED.
3. NO CONSTRUCTION ACTIVITY SHALL BE ALLOWED TO START BEFORE 8AM OR EXTEND BEYOND 6PM. NO CONSTRUCTION ACTIVITY SHALL BE ALLOWED ON SUNDAYS OR ON LEGAL NEW YORK STATE HOLIDAYS.
4. ALL SOIL EROSION AND SEDIMENT CONTROL PRACTICES SHALL BE IN ACCORDANCE WITH THE LATEST EDITIONS OF THE WESTCHESTER COUNTY BEST PRACTICES MANUAL ON CONSTRCUTION RELATED ACTIVITIES, THE NEW YORK STATE STANDARDS AND SPECIFICATIONS FOR EROSION AND SEDEMENT CONTROL AND PERTINENT CHAPTERS OF THE "CODE OF THE TOWN OF LEWISBORO, NY."
5. ALL TEMPORARY SOIL STOCKPILES, STAGING AREAS AND MATERIALS/EQUIPMENT WILL BE LOCATED WITHIN THE AREA OF DISTURBANCE PROTECTED BY SILT FENCE.
6. ALL SOIL EROSION AND SEDIMENT CONTROL PRACTICES ARE TO BE INSTALLED PRIOR TO THE COMENCEMENT OF ANY EARTH MOVING OPERATIONS, AND MAINTAINED UNTIL PERMANENT PROTECTIONS/STABILIZATION IS ESTABLISHED.
7. ANY DISTURBED AREAS THAT WILL BE LEFT EXPOSED FOR MORE THAN 14 DAYS, AND NOT SUBJECT TO CONSTRUCTION TRAFFIC SHALL IMMEDIATELY RECEIVE AN APPLICATION OF TEMPORARY SEEDING. EROSION CONTROL BLANKETS *(CURLEX)* SHALL BE USED IF THE SEASON PREVENTS THE ESTABLISHMENT OF TEMPORARY COVER.
8. THE CONTRACTOR SHALL KEEP BENEDICT ROAD CLEAR OF ANY DIRT AND DEBRIS AND SHALL BE RESPONSIBLE FOR ANY ROAD CLEANING DURING THE COURSE OF CONSTRUCTION.
9. THE CONTRACTOR SHALL INSTALL NEW TREES, SHRUBS, AND GROUND COVERS AS SOON AS POSSIBLE IN ORDER TO PROVIDE LONG TERM STABILIZATION.

MAINTENANCE AND INSPECTION

1. THE CONTRACTOR SHALL BE RESPOSIBLE FOR THE PROPER CONSTRUCTION, STABILIZATION, AND MAINTENANCE OF ALL TEMPORARY EROSION AND SEDIMENT CONTROL MEASURES AND RELATED ITEMS; AND SHALL BE RESPONSIBLE FOR THE PROPER CONSTRUCTION AND STABILIZATION OF ALL PERMANENT EROSION AND SEDIMENT CONTROL MEASURES AND RELATED ITEMS.
2. SILT FENCE SHALL BE INSPECTED EVERY 7 DAYS AND AFTER EVERY STORM EVENT REGARDLESS OF THE INTENSITY. ANY NECCESSARY REPAIRS OR MAINTENANCE OF THE FENCE SHALL BE MADE IMMEDIATELY.

JOHN JAY

LANDSCAPE DEVELOPMENT

262 Katonah Ave. #268, Katonah NY 10536

NAN - 2013 - 01492 3 of 10

FEB 2 8 2014

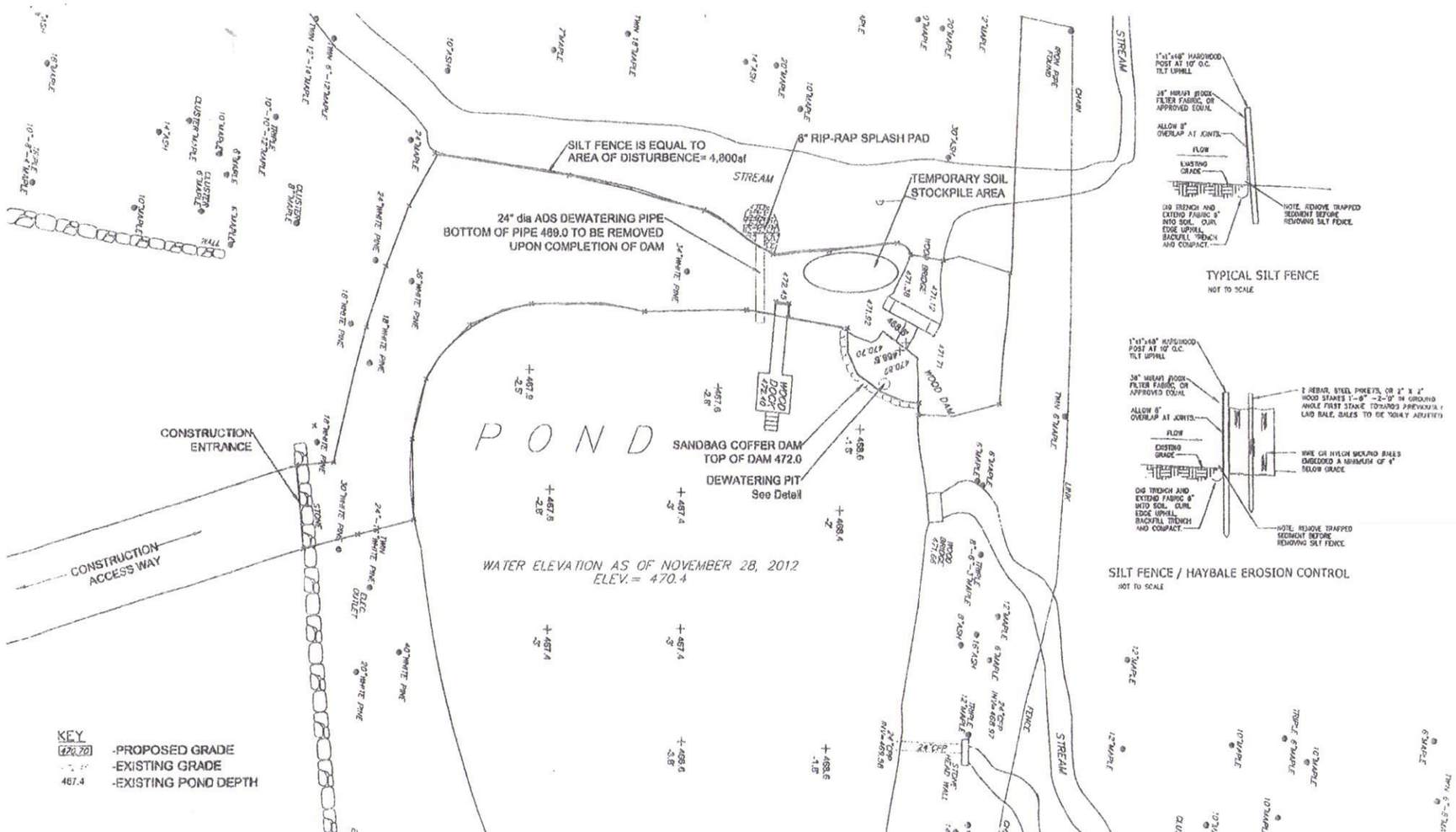

S3d	WEISBERG RESIDENCE - 25 BENEDICT ROAD, LEWISBORO, NY	20 SCALE	JOHN JAY LANDSCAPE DEVELOPMENT
	SITE PLAN DETAIL with TEMPORARY COFFER DAM AND DEWATERING PLAN	1st Rev. 8-14-13	282 Kaloogh Ave. #288, Kaloogah NY 10536

NAN - 2013 - 01492 4 of 10 FEB 2 8 2014

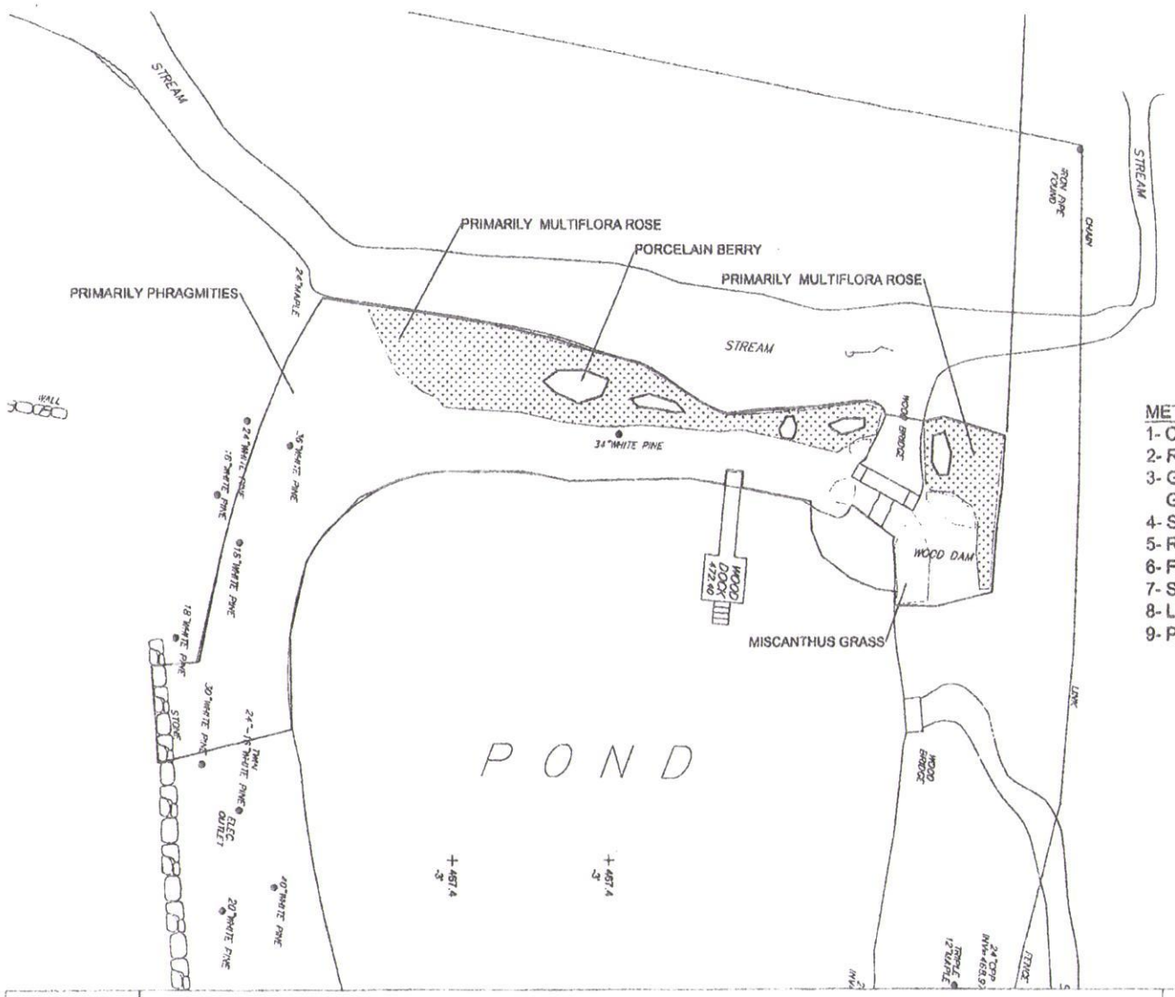

METHOD OF REMOVAL

1- CUT DOWN INVASIVES 6" to 2'-0" ABOVE GRADE
2- REMOVE DEBRIS AND DISPOSE OFF SITE
3- GRUB OUT ROOTS TO MAXIMUM OF 2' BELOW GRADE USING MINI EXCAVATOR OR BY HAND SHOVELS.
4- SPREAD EXCAVATION SPOILS FOR 1" LIFT
5- ROUGH GRADE INCORPORATING SPOILS BY MACHINE
6- FINE GRADE BY HAND RAKING
7- SEED WITH MEDOW MIX
8- LAY BIO-DEGRADABLE STRAW EROSION CONTROL BLANKETS
9- PLANT NATIVE TREES AND SHRUBS THROUGH BLANKETS

S3a 8-14-13	WEISBERG RESIDENCE - 25 BENEDICT ROAD, LEWISBORO, NY INVASIVE PLANT SPECIES REMOVAL	20 SCALE	JOHN JAY LANDSCAPE DEVELOPMENT 282 Katonah Ave. #268, Katonah NY 10536

NAN - 2013 - 01492 - EMC 5 of 10

FEB 2 8 2014

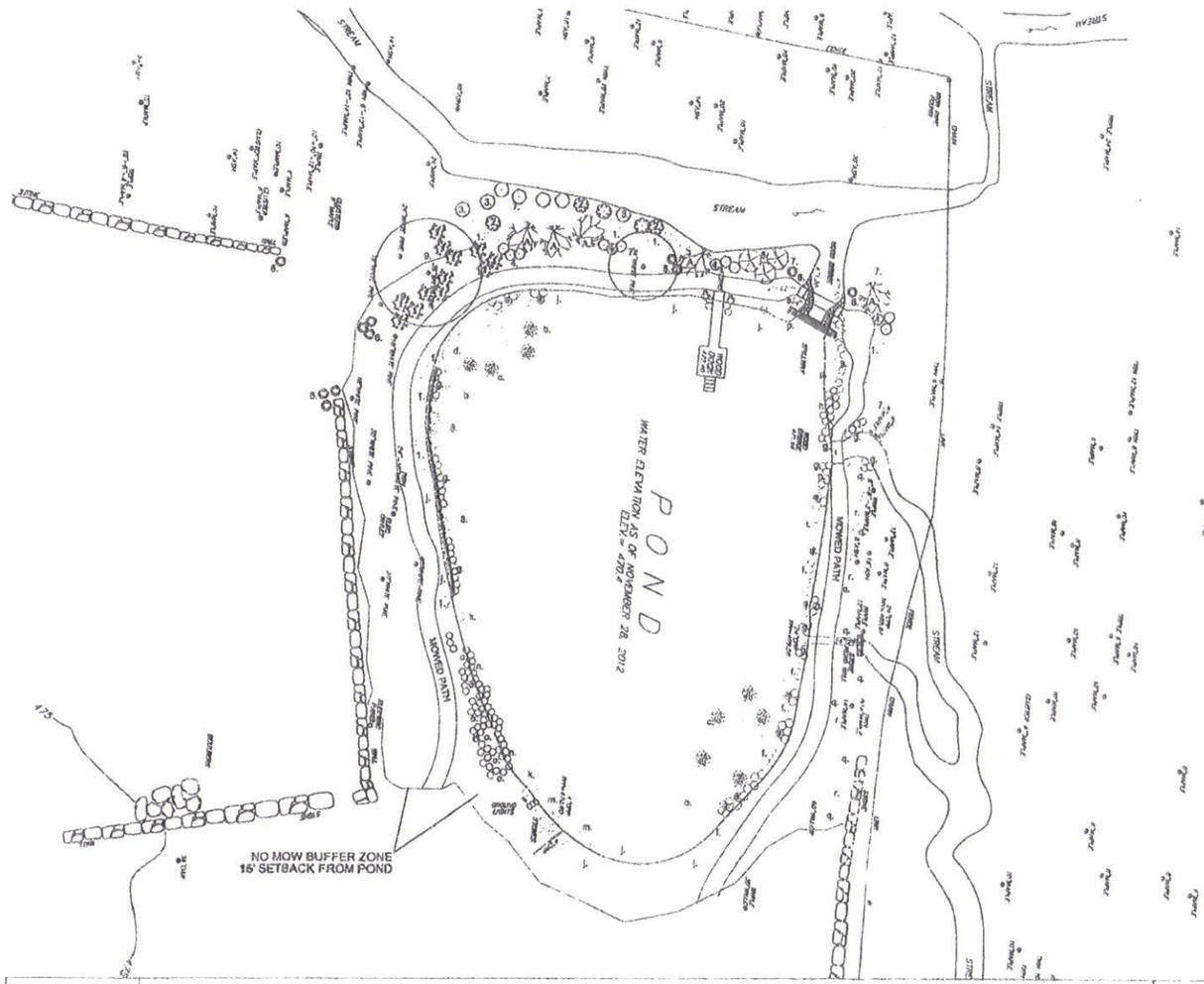

PLANT LIST

KEY	COMMON NAME	BOTANICAL NAME	QUANT.	SIZE
TREES				
A.	SERVICEBERRY	AMELANCHIER	5	8-10'
SHRUBS				
1.	SUMMER SWEET	CLETHRA ANIFOLIA	19	3 GAL
2.	SPECKLED ALDER	ALNUS INCANA	5	18"-24"
3.	BUTTON BUSH	CEPHALANTHUS OCCIDENTALIS	7	3 GAL
4.	RED CHOKEBERRY	ARONIA ARBUTIFOLIA	9	3 GAL
5.	WINTERBERRY	ILEX VERTICILLATA	3	3-4'
6.	INKBERRY	ILEX GLABRA	11	24"-30"
7.	SWEETSPIRE	ITEA VIRGINIANA	16	3 GAL
8.	BANKERS DWARF WILLOW	SALIX COTTETI (non-native)	8	3 GAL
9.	STAGHORN SUMAC	RHUS TYPHINA	21	3 GAL
PERENNIALS				
a.	ROSEMALLOW	HIBISCUS MOSCHEUTOS	23	1 GAL
b	WHITE WATER LILY	NYMPHAEA ODORATA	13	2 GAL
c.	YELLOW WATER LILY	NUPHAR LUTEUM	9	2 GAL
d.	PICKERAL WEED	PONTEDERIA CORDATA	30	1 QRT
e.	BURREED	SPARGANIUM AMERICANUM	9	1 QRT
f.	SOFT RUSH	JUNCUS EFFUSUS	50	1 QRT
g.	BLUE FLAG IRIS	IRIS VERSICOLOR	48	1 GAL
h.	CARDINAL FLOWER	LOBELIA CARDINALIS	19	1 GAL
i.	CANADIAN RUSH	JUNCUS CANADENSIS	12	1 QRT
j	SLENDER RUSH	JUNCUS TENUIS	78	1 QRT
k.	LURID SEDGE	CAREX LURIDA	31	1 QRT
m.	BROOM SEDGE	CAREX SCOPARIA	24	1 QRT
n.	SPIKE RUSH	ELEOCHARIS PALUSTRIS	61	1 QRT
o.	MILKWEED	ACSLEPAS INCARNATA	14	1 QRT
p.	SWITCHGRASS	PANICUM VIRGATUM	8	1 GAL
q.	WOOD FERN	DRYOPTERIS MARGINALIS	140	1 GAL
r.	OSTRICH FERN	MATTEUCIA Struthioptris	60	1 GAL
s.	JOE PYE WEED	EUPATORIUM PURPURIUM	19	1 GAL

L1d	WEISBERG RESIDENCE - 25 BEDEDICT ROAD, LEWISBORO, NY	30 SCALE	JOHN JAY LANDSCAPE DEVELOPMENT
5-17-13	POND PLANTING PLAN	1st Rev. 8-14-13	282 Katonah Ave. #268, Katonah NY 10536

North

NAW - 2013 - 01492 - EWC 6 of 10

FEB 2 8 2014

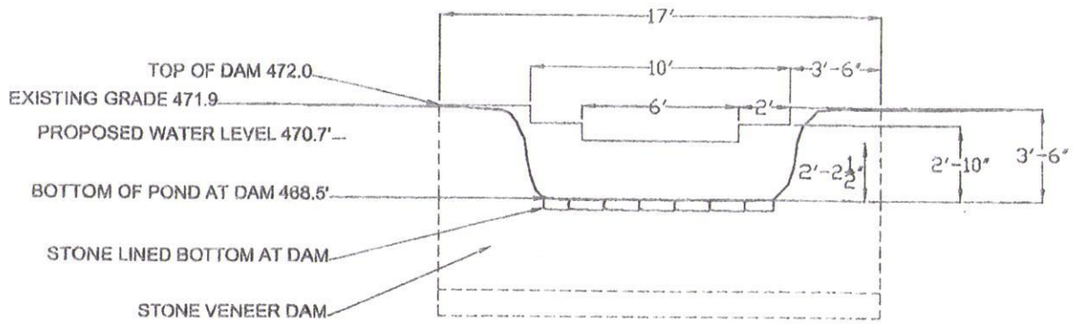

STONE VENEER CONCRETE DAM FRONT ELEVATION

1/4" = 1'-0"

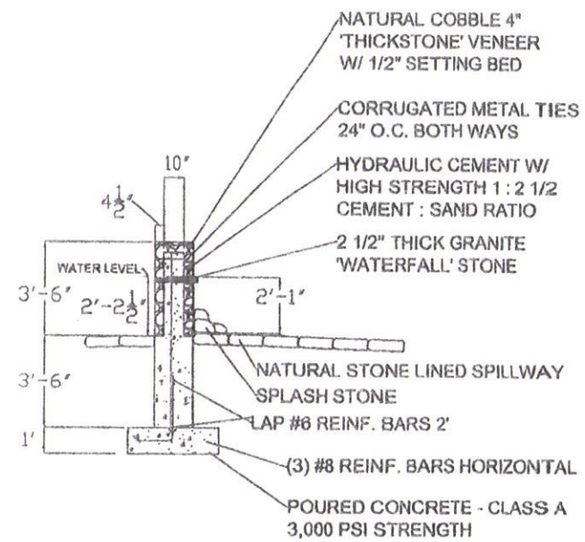

STONE VENEER CONCRETE DAM SIDE ELEVATION

1/4" = 1'-0"

D3	WEISBERG RESIDENCE - 25 BENEDICT ROAD, LEWISBORO, NY	1/4" SCALE	JOHN JAY LANDSCAPE DEVELOPMENT 282 Katonah Ave. #268, Katonah NY 10536
6-5-13	PROPOSED DAM ELEVATIONS		

NAW - 2013 - 01492 - EMC 7 of 16

FEB 2 8 2014

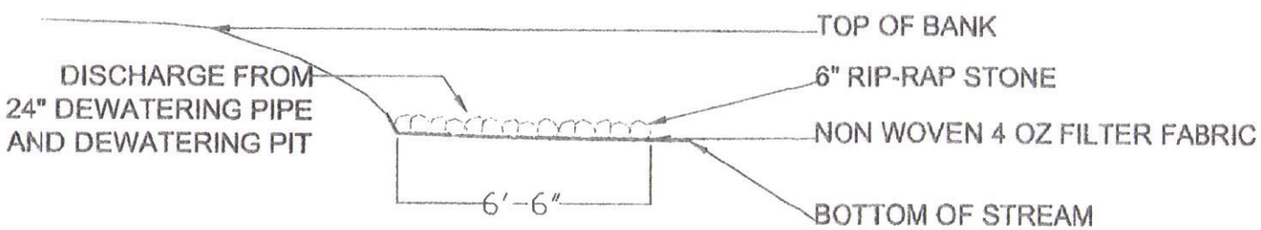

DEWATERING SPLASH PAD

1/4" = 1'-0"

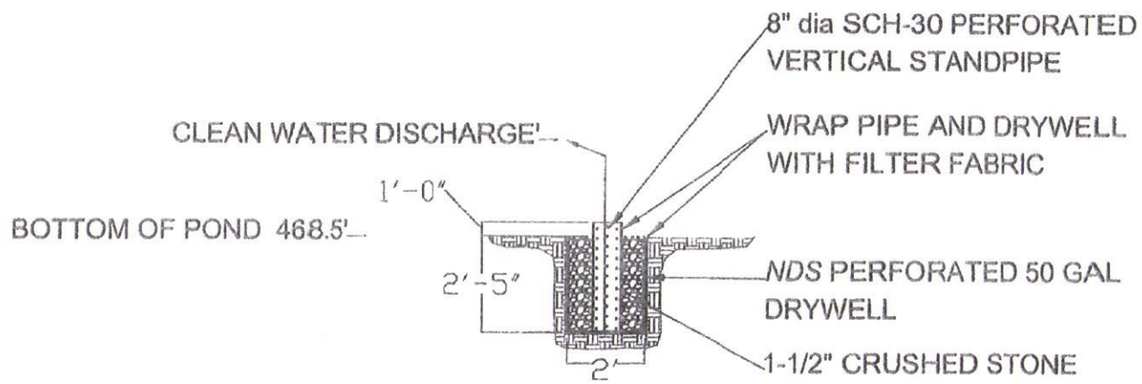

DEWATERING PIT

1/4" = 1'-0"

D3a	WEISBERG RESIDENCE - 25 BENEDICT ROAD, LEWISBORO, NY	1/4" SCALE	JOHN JAY LANDSCAPE DEVELOPMENT 282 Katonah Ave. #268, Katonah NY 10536
7-16-13	DE-WATERING DETAILS		

NAW - 2013-01492 - EUC 8 of 10

FEB 2 8 2014

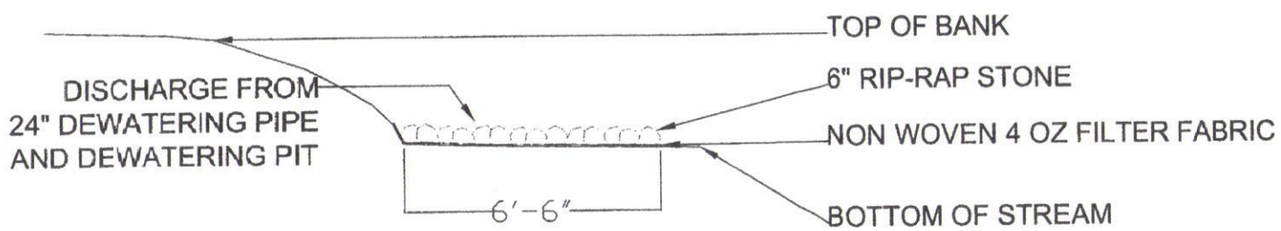

DEWATERING SPLASH PAD

1/4" = 1'-0"

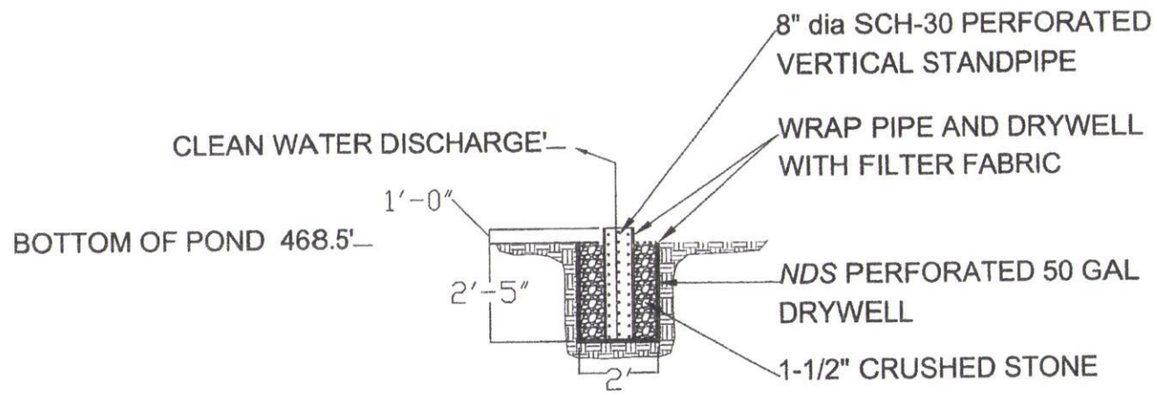

DEWATERING PIT

1/4" = 1'-0"

D3a	WEISBERG RESIDENCE - 25 BENEDICT ROAD, LEWISBORO, NY	1/4" SCALE	JOHN JAY LANDSCAPE DEVELOPMENT 282 Katonah Ave. #268, Katonah NY 10536
7-16-13	DE-WATERING DETAILS		

NAN - 2013 - 01492 - EWC 1 of 10

FEB 2 8 2014

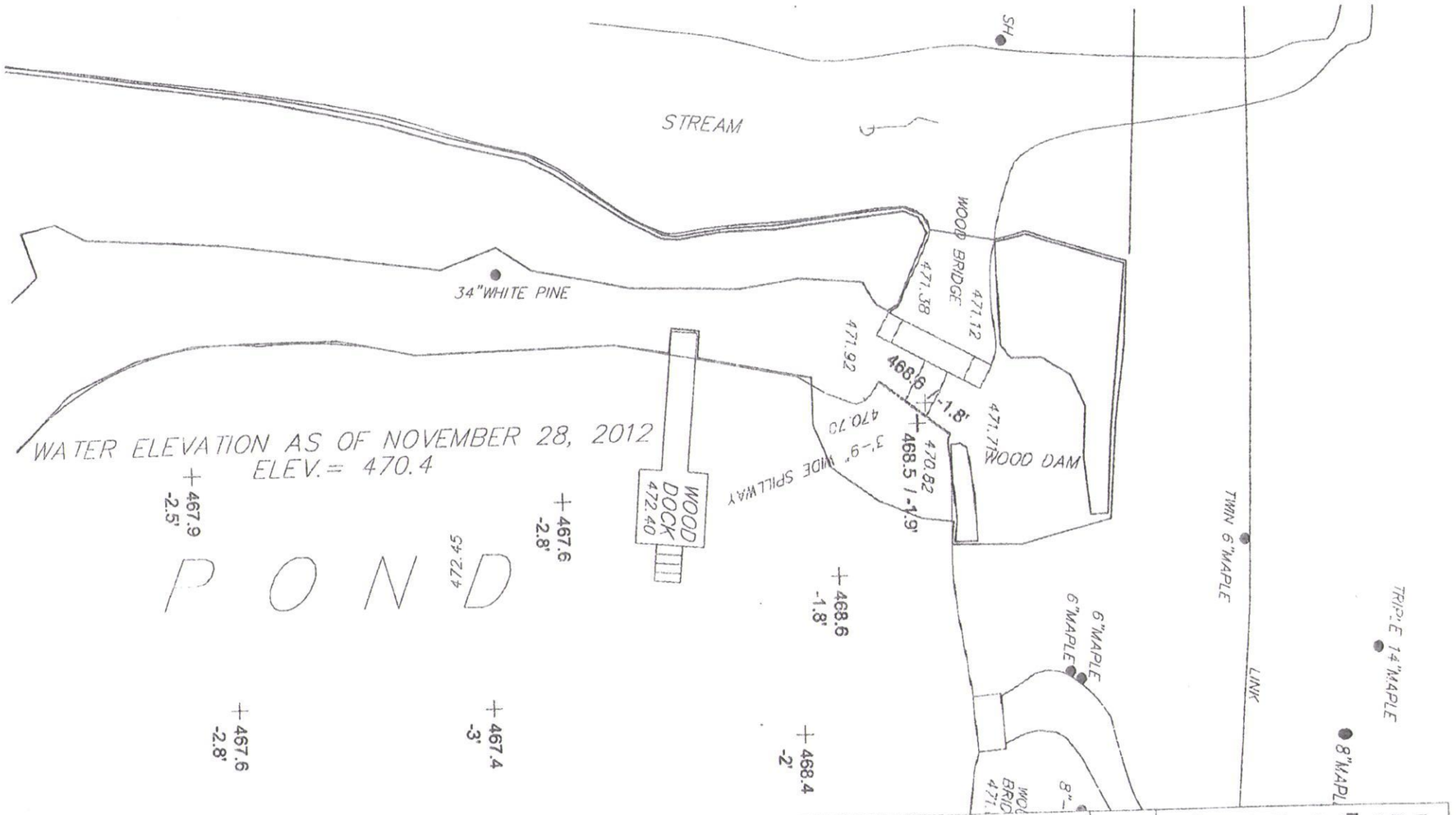

S1d

6-5-13

WEISBERG RESIDENCE - 25 BEDEDICT ROAD, LEWISBORO, NY

POND WOOD DAM EXISTING CONDITIONS - DETAIL

NAW - 2013-0442 - EUC 8 of 10

FEB 2 8 2014

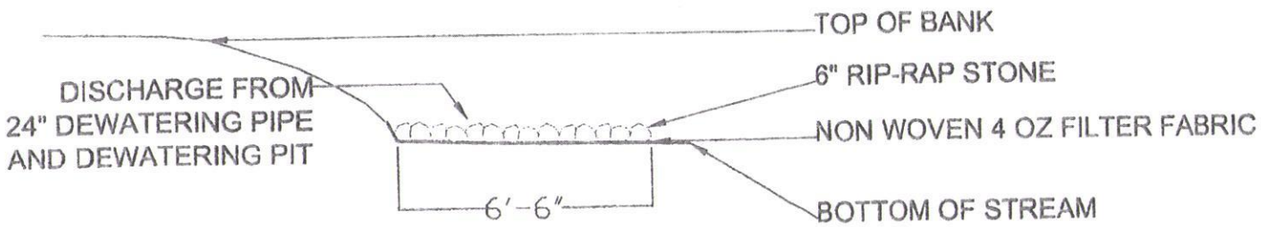

DEWATERING SPLASH PAD

1/4" = 1'-0"

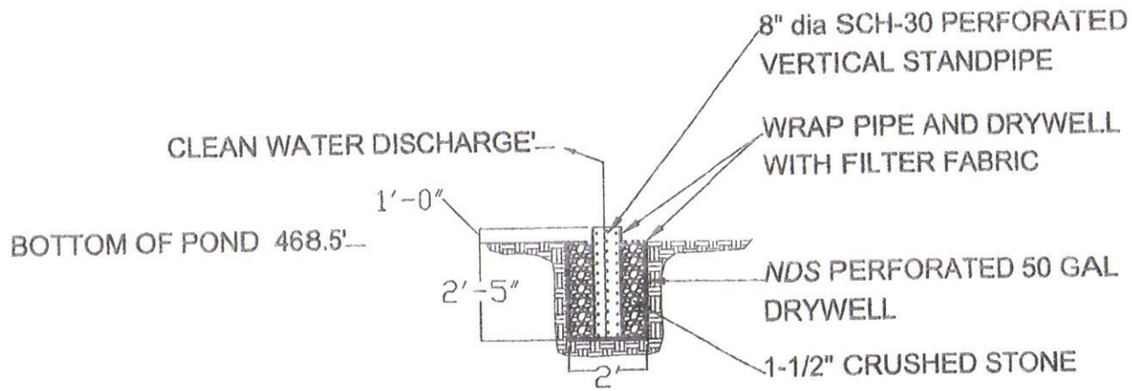

DEWATERING PIT

1/4" = 1'-0"

D3a	WEISBERG RESIDENCE - 25 BENEDICT ROAD, LEWISBORO, NY	1/4" SCALE	JOHN JAY LANDSCAPE DEVELOPMENT 282 Katonah Ave. #268, Katonah NY 10536
7-16-13	DE-WATERING DETAILS		

Environmental
Protection

October 28, 2016

Mr. David P. Lombardi, PE
120 Bedford road,
Armonk, NY 10504

Vincent Sapienza
Acting Commissioner

Re: Weisberg Residence Dam
Crossing Piping or Diversion Permits (CPDP)
Tax Map # 11155-153-0033
25 Benedict Road
(T) Lewisboro, Westchester County, New York
DEP Log #2014-CR-0511-CPD.1

Paul V. Rush, P.E.
Deputy Commissioner
prush@dep.nyc.gov

465 Columbus Ave.
Valhalla, New York 10595

Tel. (845) 340-7800
Fax (845) 334-7175

Dear Mr. Lombardi:

This letter is to inform you that your application to engage in the above referenced regulated activities pursuant to the "Rules and Regulations for the Protection from Contamination, Degradation, and Pollution of the New York City Water Supply and its Sources" (Regulations) was *approved* on October 28, 2016. Enclosed please find the New York City Department of Environmental Protection's (DEP) *Crossing Piping or Diversion Permits determination* for the property located on Benedict Road in the Town of Lewisboro, New York.

DEP reserves the right to modify, suspend, or revoke this approval based on the grounds set forth in Section 18-26 of the Regulations. The activity proposed in your applications applies only to the terms of this approval and is subject to the regulations cited above. Failure to comply with the conditions of the approval may be the cause for suspension of this approval and initiation of an enforcement action. Should modification, suspension or revocation of an approval be necessary, DEP will notify the regulated party, via certified mail or personal service, prior to modifying, suspending or revoking the approval. The notice will state the alleged facts or conduct which appear to warrant the intended action and explain the procedures to be followed.

The Regulations provide that an applicant may appeal the imposition of a substantial condition in an approval by filing a petition, in writing, with DEP and the New York City Office of Administrative Trials and Hearings ("OATH") within thirty days of the date this determination was mailed.

Please contact Mariyam Zachariah at (914) 742-2014 at least 2 days prior to the start of construction so that DEP may inspect and monitor the erosion control practices. A copy of this determination must be available at the project site during construction.

The CPDP determination, two set of plans bearing our conditioned stamp of approval is enclosed.

Sincerely,

Mary P. Galasso,
Supervisor
EOH Stormwater Programs Group
Watershed Protection Programs

Attachment: CPDP plans

c: Ms. Tracey B. Weisberg
Mr. Jay Archer
Town of Lewisboro Planning Board
Armand DeAngelis, DEC

New York City
Department of Environmental Protection

DETERMINATION

CROSSING, PIPING OR DIVERSION PERMIT

Pursuant to the authority granted under:

Article 11 of the New York State Public Health Law;
Rules and Regulations For The Protection From Contamination, Degradation and Pollution Of The New York City Water Supply and Its Sources, 15 RCNY Chapter 18, 10 NYCRR Part 128.

New York City Department of Environmental Protection makes the following determination with respect to the stormwater pollution prevention plan described below:

Name of Project: Weisberg Residence Dam

Location: 25 Benedict Road, Town of Lewisboro, Westchester County, New York
Tax Map # 11155-153-0033

Owner/Applicant: Ms. Tracey B. Weisberg

Address: 25 Benedict Road, Town of Lewisboro, NY

Drainage Basin: Cross River Reservoir Basin

General Description:

The project site is located on Benedict Road in the Town of Lewisboro. The project scope involves the removal of the wooden dam and replacement with a concrete dam, the lining of the banks and repair of the stream bed with rip rap and the refurbishment of the wood bridge downstream of the dam.

The Crossing Piping or Diversion (CPDP) shall be implemented in accordance with the Engineer's plans for Weisberg Residence Dam, 25 Benedict Road, Town of Lewisboro, Westchester County, New York, Tax Map # 11155-153-0033, prepared by JMC Planning Engineering, Landscape Architecture & land Surveying, PLLC, dated September 16, 2016, last revised October 20, 2016 (see appendix A).

(XX) Approved ( ) Denied

Conditions of Approval:

This approval is granted with the following conditions:

- The regulated activity must be conducted in compliance with the plans as approved, listed in Appendix A, all applicable accepted standards, and all applicable laws, rules and regulations. Any alteration of the plans must be approved by DEP prior to construction.
- The applicant is required to submit as-built drawings for all crossing, piping or diversion structures and associated appurtenances.
- Alteration or modification shall require DEP review and approval of an amended CPDP.
- All erosion and sediment controls must be properly installed and maintained until the site has been stabilized and the risk of erosion eliminated. Final stabilization is defined in the General Permit as all soil disturbing activities at the site have been completed, and that a uniform perennial vegetative cover with a density of 80% cover for the area has been established or equivalent stabilization measures (such as the use of mulches or geotextiles) have been employed.
- The applicant must schedule a pre-construction conference prior to the start of construction. Present at the meeting should be the applicant, the engineer, the contractor, and DEP staff.
- The applicant must notify DEP at least forty-eight (48) hours prior to the commencement of construction activity so that inspections can be scheduled by DEP.
- This approval shall expire and thereafter be null and void unless construction is completed within Five (5) years of the date of issuance or within any extended period of time approved by DEP upon good cause shown.
- In the event that the material submitted is inaccurate or misleading, this approval is not valid and construction of this project is in violation of DEP Regulations.

- Failure to comply with any of the conditions of this approval is a violation of this approval and the Rules and Regulations for The Protection from Contamination, Degradation and Pollution of the New York City Water Supply and Its Sources.

- The crossing, piping or diversion structures and associated appurtenances must be maintained in accordance with the maintenance schedule included in the CPDP and approved by DEP.

- This approval and all conditions of the approval are binding on the owner of the property where the facility is to be located. Any references to the "applicant" in this approval or in any conditions of this approval shall be deemed to refer to the owner of such property.

- If the applicant sells or otherwise transfers title of **Weisberg Residence Dam** before all construction planned for the property is completed and the site is stabilized, the applicant shall require the new owner ("Buyer") to comply with the CPDP approved by the New York City Department of Environmental Protection on *October 28, 2016* including, but not limited to, all provisions relating to erosion and sediment control during construction and to all maintenance of the stormwater management facilities once construction is complete. In particular, the applicant shall provide the Buyer with a copy of the CPDP and shall cause the following real covenants and restrictions to be recorded with the deed for **Weisberg Residence Dam** with the following provisions:

  (1) Buyer hereby acknowledges, covenants, warrants, and represents that he/she shall install and maintain any and all erosion controls and stormwater management facilities on the premises in accordance with the CPDP, such CPDP being attached hereto as Exhibit __.

  (2) Buyer's installation and maintenance of the erosion control and stormwater management facilities shall be for the benefit of the consumers of the New York City drinking water supply system as well as for the owners of **Weisberg Residence Dam.**

  (3) Buyer's obligation to install and maintain any and all erosion controls and stormwater management facilities on the premises in accordance with the attached CPDP shall be perpetual, shall run with the land, and shall be binding on Buyer's heirs, successors, and assigns.

(4) Buyer hereby covenants, warrants and represents that any lease, mortgage, subdivision, or other transfer of **Weisberg Residence Dam**, or any interest therein, shall be subject to the restrictive covenants contained herein pertaining to the installation and maintenance of erosion control and stormwater management facilities, and any deed, mortgage, or other instrument of conveyance shall specifically refer to the attached CPDP and shall specifically state that the interest thereby conveyed is subject to covenants and restrictions contained herein.

- Prior to conveying title to **Weisberg Residence Dam**, the applicant shall submit to the New York City Department of Environmental Protection a proposed deed containing the aforementioned real covenants and restrictions.

Date: October 28, 2016

Weisberg Residence Dam
Crossing Piping or Diversion Permits (CPDP)
25 Benedict Road, (T) Lewisboro, New York
Tax Map # 11155-153-0033

Determination made by:

Mary P. Galasso
Supervisor
EOH, Stormwater Programs Group
Watershed Protection Programs

Recommended for approval by:

Mariyam Zachariah
Associate Project Manager
EOH, Stormwater Programs Group
Watershed Protection Programs

NYCDEP, 465 Columbus Avenue, Valhalla NY 10595

This determination letter must be maintained by the applicant and be readily available for inspection at the construction site.

APPENDIX A

The following documents, prepared by JMC Planning Engineering, Landscape Architecture & land Surveying, PLLC, for Weisberg Residence Dam, 25 Benedict Road, Town of Lewisboro, Westchester County, New York, Tax Map # 11155-153-0033, are appended to the October 28, 2016 approval:

1) Drawing No.: S1d, titled, Pond Wood Dam existing Conditions- Detail, dated September 16, 2016.

2) Drawing No.: S3, titled, Site Plan, Access, Temporary Coffer Dam and Dewatering Plan, dated September 16, 2016, last revised October 20, 2016.

3) Drawing No.: D3, titled, Details, dated September 16, 2016.

WETLAND IMPLEMENTATION PERMIT

TOWN OF LEWISBORO

Town Offices @ Orchard Square, Suite L (Lower Level)
20 North Salem Road, Cross River, NY 10518
Phone: (914) 763-3060
Fax: (914) 533-0097

Date Issued: June 9, 2015 Permit #: 56-13 W.P.

Permit is hereby issued to: Tracey Weisberg
25 Benedict Road

Description of Approved Activity: The subject property is currently developed with single-family residence, detached barn, driveway, pool, septic system and potable water well. The property contains a pond and wetlands regulated by both the Town of Lewisboro and the New York State Department of Environmental Conservation (NYSDEC). The applicant is proposing to restore and enhance the on-site pond by removing invasive plant species and planting the perimeter of the pond with native trees, shrubs and herbaceous material. The project had included the replacement of an existing wood dam with a concrete dam; however, this aspect of the project has been removed by the applicant from the scope of the project and is not being permitted herein. This application was initially reviewed by the Planning Board and later referred to the Wetland Inspector for authorization.

Location of Proposed Activity: 25 Benedict Road

Sheet: 33 Block: 11155 Lot(s): 153

Conditions:

1. No land disturbance activity shall be permitted within the wetlands or within 150 feet of the wetlands, except as specifically approved herein.

2. All work shall be completed in accordance with the following plan, prepared by John Jay Landscape Development and dated December 18, 2012:

   - Pond Planting Plan (Sheet W-1)

3. Reference is made to the New York State Department of Environmental Conservation (NYSDEC) Freshwater Wetland Permit, dated December 23, 2013, and the Army Corps of Engineers Permit, dated February 28, 2014.

4. Prior to the commencement of any site work, silt fencing shall be installed downslope of the disturbance area and perpendicular to the direction of the slope. All disturbed areas shall be raked, seeded and mulched upon completion of land disturbance activities.

5. Following completion of all site work, a final site inspection shall be conducted by the Town Wetland Inspector; please call 914-763-3060 to schedule an appointment.

6. The issuance of this permit does not necessarily authorize the commencement of site work. No site work shall commence until the conditions of this permit have been satisfied (the conditions required to be satisfied prior to the commencement of any site work) and until the owner/applicant has obtained any and all required permits from other Town, County, State or Federal Departments and/or Agencies.

7. All work covered by this permit is to be completed before June 9, 2017, unless an extension of this period is requested in writing and granted.

Wetland Inspector

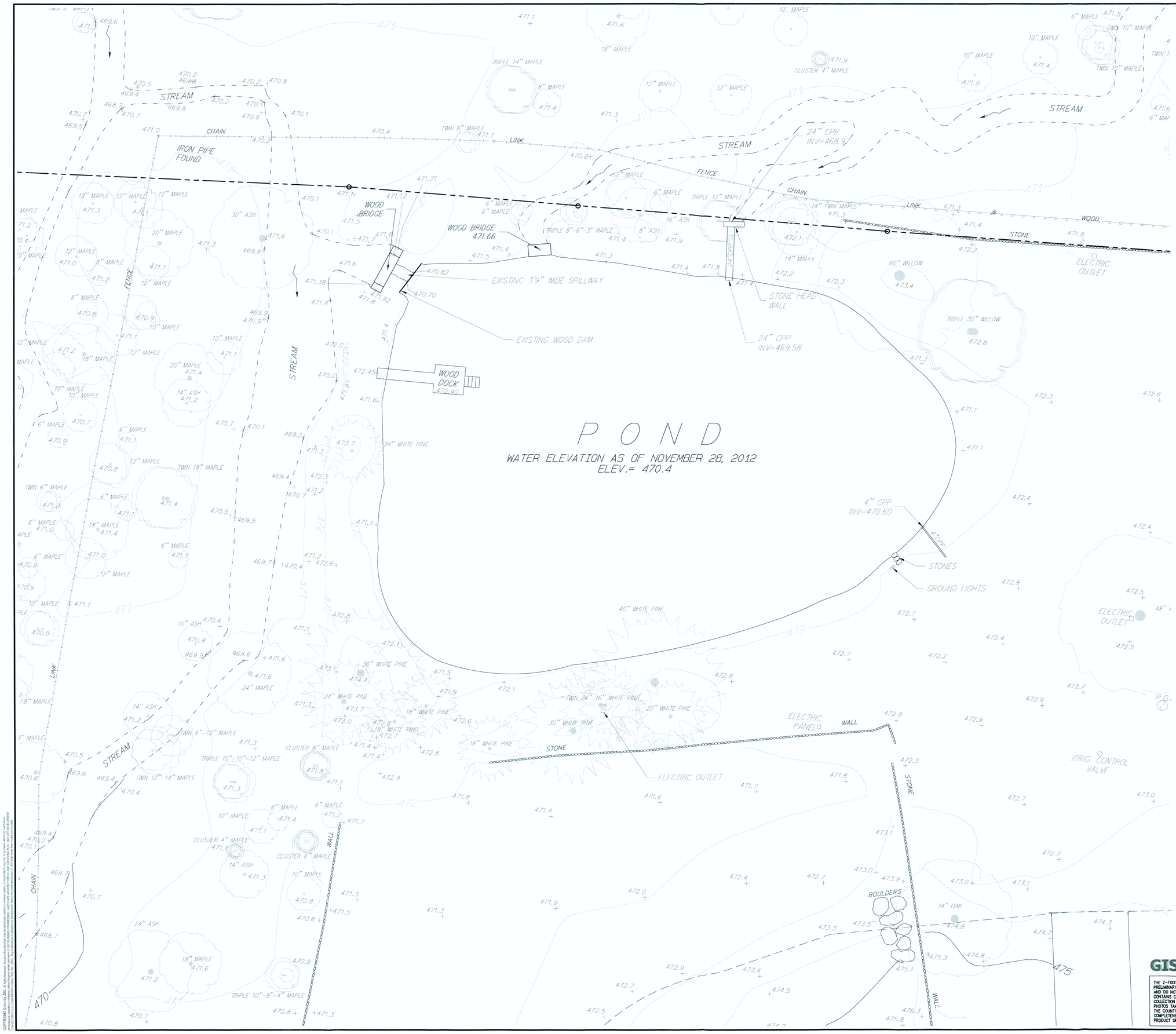

LEGEND

- EXISTING PROPERTY LINE
- ADJACENT PROPERTY LINE
- EXISTING BUILDING
- EXISTING WETLAND LINE AND DELINEATION
- EXISTING WETLAND BUFFER
- EXISTING PAVEMENT EDGE
- EXISTING CURB LINE
- EXISTING CONTOUR
- EXISTING INDEX CONTOUR
- EXISTING STONE WALL
- EXISTING RETAINING WALL
- EXISTING CHAIN LINK FENCE
- EXISTING WOOD POST FENCE
- EXISTING TREE AND DESIGNATION
- EXISTING STORM DRAIN LINE AND SIZE
- EXISTING STREAM

NOTES:

1. EXISTING CONDITIONS DEPICTED ON THIS PLAN HAVE BEEN TAKEN FROM SURVEY TITLED, "TOPOGRAPHIC SURVEY PREPARED FOR TRACEY B. WEISBERG," PREPARED BY H. STANLEY JOHNSON AND COMPANY LAND SURVEYORS, P.C., DATED 12-03-2012 AND WESTCHESTER COUNTY GIS.
2. EXISTING WETLAND DELINEATION AS WELL AS EXISTING BUILDINGS DEPICTED ON THIS PLAN HAS BEEN DETERMINED BY WESTCHESTER COUNTY GIS. THE ENTIRE LIMIT OF DISTURBANCE AREA IS LOCATED IN THE STATE AND LOCALLY REGULATED NYSDEC WETLAND "L-14".

No.	Revision	Date	By

Previous Editions Obsolete

APPLICANT/OWNER:

MS. TRACEY WEISBERG
25 BENEDICT ROAD
SOUTH SALEM, NY 10590

JMC Planning, Engineering, Landscape Architecture & Land Surveying, PLLC
JMC Site Development Consultants, LLC
John Meyer Consulting, Inc.
120 BEDFORD ROAD • ARMONK, NY 10504
voice 914.273.5225 • fax 914.273.2102
www.jmcpllc.com

POND WOOD DAM EXISTING CONDITIONS – DETAIL

WEISBERG RESIDENCE DAM
25 BENEDICT ROAD
TOWN OF LEWISBORO, NY

CITY OF NEW YORK
DEPT. OF ENVIRONMENTAL PROTECTION
BUREAU OF WATER SUPPLY
DIVISION OF ENGINEERING
APPROVED

SUBJECT TO SPECIFIED CONDITIONS IN
DETERMINATION DATED: 10/28/16
TO: David P. Lombardi, PE
S/B/L: 11155-153-00033
(T): Lewisboro (C): Westchester
APPROVED BY:
APPROVAL EXPIRATION DATE: 10/28/2021

ANY ALTERATION OF PLANS, SPECIFICATIONS, PLATS AND REPORTS BEARING THE SEAL OF A LICENSED PROFESSIONAL ENGINEER OR LICENSED LAND SURVEYOR IS A VIOLATION OF SECTION 7209 OF THE NEW YORK STATE EDUCATION LAW, EXCEPT AS PROVIDED FOR BY SECTION 7209, SUBSECTION 2.

STATE OF NEW YORK · DAVID P. LOMBARDI · 071201 · LICENSED PROFESSIONAL ENGINEER

GIS GEOGRAPHIC INFORMATION SYSTEMS

THE 2-FOOT CONTOURS DEPICTED ON THIS PLAN ARE INTENDED TO BE USED FOR PLANNING & PRELIMINARY ENGINEERING APPLICATIONS. THEY ARE NOT INTENDED TO BE USED IN ENGINEERING DESIGN AND DO NOT NEGATE THE NEED FOR A FIELD SURVEY. THE WESTCHESTER COUNTY GIS DATASET CONTAINS CONTOUR LINES MODELED AT A TWO FOOT INTERVAL. THE SOURCE INFORMATION USED IN THE COLLECTION OF THE DATASET WAS PART OF THE NEW YORK STATE DIGITAL ORTHOIMAGERY PROGRAM; PHOTOS TAKEN IN APRIL 2004. VERTICAL DATUM IS NAVD88.
THE COUNTY OF WESTCHESTER MAKES NO WARRANTY, EXPRESS OR IMPLIED, CONCERNING THE COMPLETENESS OR ACCURACY OF THE DATA AND ASSUMES NO LIABILITY WHATSOEVER FOR ANY PRODUCT OR ANALYSIS DERIVED FROM OR BASED ON THE DATA.

Drawn:	EK	Approved:	DL
Scale:	1" = 10'		
Date:	09/16/2016		
Project No:	15225		
15225-SIE	S-10 EXIST	EXIST.scr	
Drawing No:	S1d		

COPYRIGHT © 2015 by JMC All Rights Reserved. No part of this document may be reproduced, stored in a retrieval system, or transmitted in any form or by means, electronic, mechanical, photocopying, recording or otherwise, without the prior written permission of JMC PLANNING, ENGINEERING, LANDSCAPE ARCHITECTURE & LAND SURVEYING, PLLC, JMC SITE DEVELOPMENT CONSULTANTS, LLC, JOHN MEYER CONSULTING, INC. (JMC). USE OF THIS DOCUMENT FOR ANY PROJECT OTHER THAN THE PROJECT SHOWN HEREON IS PROHIBITED.

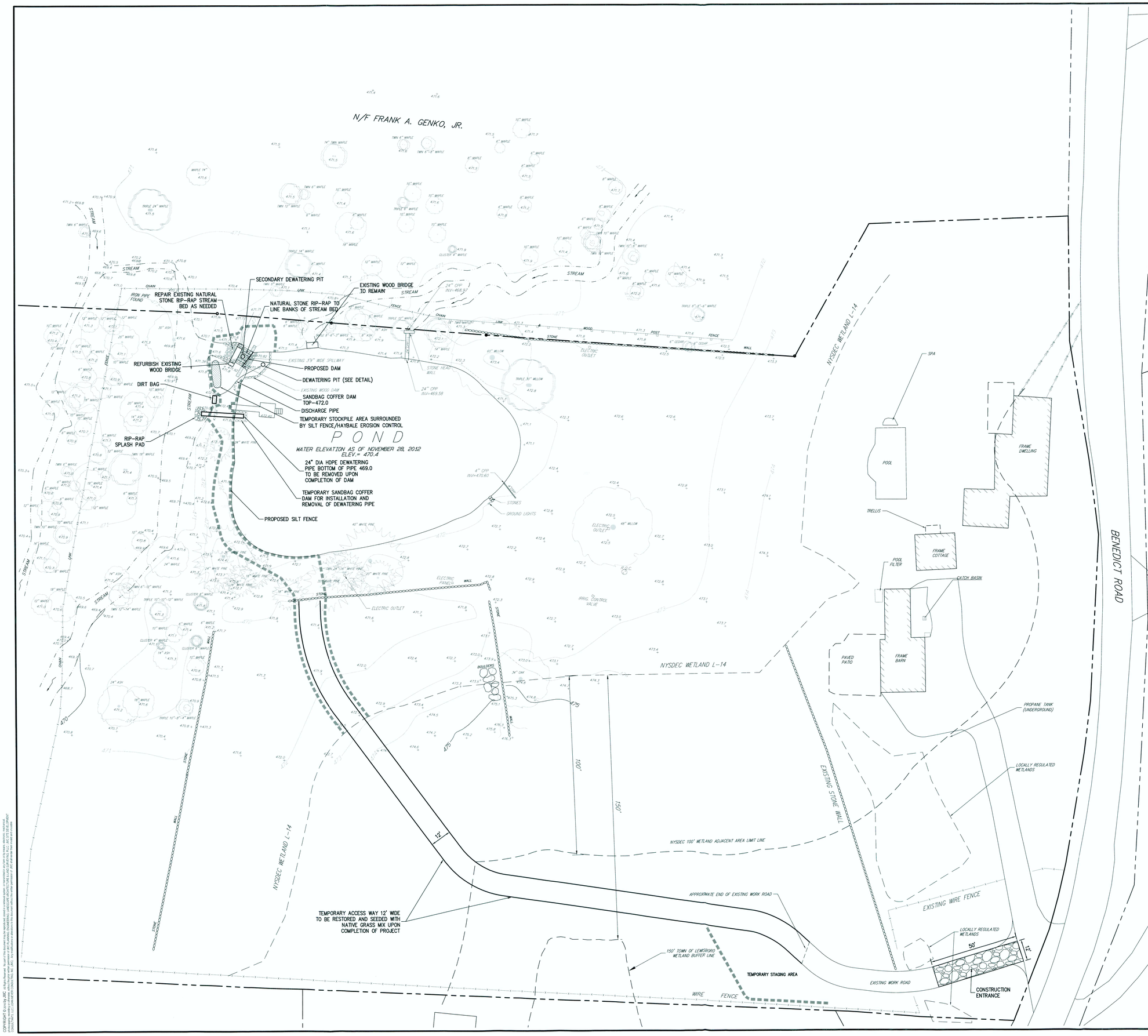

LEGEND

- EXISTING PROPERTY LINE
- ADJACENT PROPERTY LINE
- EXISTING WETLAND LINE AND DELINEATION
- EXISTING WETLAND BUFFER
- EXISTING BUILDING OVERHANG
- EXISTING BUILDING LINE
- EXISTING PAVEMENT EDGE
- EXISTING CURB LINE
- EXISTING STONE WALL
- EXISTING RETAINING WALL
- EXISTING WOOD POST FENCE
- EXISTING CHAIN LINK FENCE
- EXISTING TREE AND DESIGNATION
- EXISTING TREE LINE
- EXISTING UTILITY POLE
- EXISTING LIGHT POLE
- EXISTING SIGN
- PROPOSED CONSTRUCTION ENTRANCE
- PROPOSED SILT FENCE

NOTES:

1. EXISTING CONDITIONS DEPICTED ON THIS PLAN HAVE BEEN TAKEN FROM SURVEY TITLED, "TOPOGRAPHIC SURVEY PREPARED FOR TRACEY B. WEISBERG," PREPARED BY H. STANLEY JOHNSON AND COMPANY LAND SURVEYORS, P.C., DATED 12-03-2012 AND WESTCHESTER COUNTY GIS.
2. EXISTING WETLAND DELINEATION DEPICTED ON THIS PLAN HAS BEEN DETERMINED BY WESTCHESTER COUNTY GIS. THE ENTIRE LIMIT OF DISTURBANCE AREA IS LOCATED IN THE STATE AND LOCALLY REGULATED NYSDEC WETLAND "L-14".

GENERAL CONSTRUCTION
EROSION AND SEDIMENT NOTES
GENERAL REQUIREMENTS

1. WORK CONDUCTED UNDER THE PERMIT SHALL BE OPEN TO INSPECTION AT ANY TIME, INCLUDING WEEKENDS AND HOLIDAYS, BY THE TOWN'S INSPECTOR, OR IT'S DESIGNATED REPRESENTATIVES.
2. PRIOR TO THE START OF EARTH WORK ACTIVITIES, THE TOWN WETLAND INSPECTOR OFFICER/ENVIRONMENTAL PLANNER MUST BE CONTACTED TO SCHEDULE A SITE INSPECTION TO CONFIRM THAT EROSION AND SEDIMENT CONTROL MEASURES HAVE BEEN PROPERLY INSTALLED.
3. NO CONSTRUCTION ACTIVITY SHALL BE ALLOWED TO START BEFORE 8AM OR EXTEND BEYOND 6PM. NO CONSTRUCTION ACTIVITY SHALL BE ALLOWED ON SUNDAYS OR ON LEGAL NEW YORK STATE HOLIDAYS.
4. ALL SOIL EROSION AND SEDIMENT CONTROL PRACTICES SHALL BE IN ACCORDANCE WITH THE LATEST EDITIONS OF THE WESTCHESTER COUNTY BEST PRACTICES MANUAL ON CONSTRUCTION RELATED ACTIVITIES, THE NEW YORK STATE STANDARDS AND SPECIFICATIONS FOR EROSION AND SEDIMENT CONTROL AND PERTINENT CHAPTERS OF THE "CODE OF THE TOWN OF LEWISBORO, NY."
5. ALL TEMPORARY SOIL STOCKPILES, STAGING AREAS AND MATERIALS/EQUIPMENT WILL BE LOCATED WITHIN THE AREA OF DISTURBANCE PROTECTED BY SILT FENCE.
6. ALL SOIL EROSION AND SEDIMENT CONTROL PRACTICES ARE TO BE INSTALLED PRIOR TO THE COMMENCEMENT OF ANY EARTH MOVING OPERATIONS, AND MAINTAINED UNTIL PERMANENT PROTECTIONS/STABILIZATION IS ESTABLISHED.
7. ANY DISTURBED AREAS THAT WILL BE LEFT EXPOSED FOR MORE THAN 14 DAYS, AND NOT SUBJECT TO CONSTRUCTION TRAFFIC SHALL RECEIVE AN APPLICATION OF TEMPORARY SEEDING. EROSION CONTROL BLANKETS (CURLEX) SHALL BE USED IF THE SEASON PREVENTS THE ESTABLISHMENT OF TEMPORARY COVER.
8. THE CONTRACTOR SHALL KEEP BENEDICT ROAD CLEAR OF ANY DIRT AND DEBRIS AND SHALL BE RESPONSIBLE FOR ANY ROAD CLEANING DURING THE COURSE OF CONSTRUCTION,
9. THE CONTRACTOR SHALL INSTALL GROUND COVERS AS SOON AS POSSIBLE IN ORDER TO PROVIDE LONG TERM STABILIZATION.

MAINTENANCE AND INSPECTION

1. THE CONTRACTOR SHALL BE RESPOSIBLE FOR THE PROPER CONSTRUCTION, STABILIZATION, AND MAINTENANCE OF ALL TEMPORARY EROSION AND SEDIMENT CONTROL MEASURES AND RELATED ITEMS; AND SHALL BE RESPONSIBLE FOR THE PROPER CONSTRUCTION AND STABILIZATION OF ALL PERMANENT EROSION AND SEDIMENT CONTROL MEASURES AND RELATED ITEMS.
2. SILT FENCE SHALL BE INSPECTED EVERY 7 DAYS AND AFTER EVERY STORM EVENT REGARDLESS OF THE INTENSITY. ANY NECESSARY REPAIRS OR MAINTENANCE OF THE FENCE SHALL BE MADE WITHIN ONE BUSINESS DAY.

CONSTRUCTION SEQUENCING

1. OBTAIN ALL PERMITS AND APPROVALS FROM THE TOWN OF LEWISBORO, THE NYSDEC, AND ACOE.
2. CONDUCT A PRE-CONSTRUCTION SITE MEETING WITH THE TOWN WETLAND CONSULTANT (IF REQUIRED) AND THE NYCDEP.
3. ESTABLISH MATERIALS DELIVERY AREA AT EXISTING WORK ROAD ENTRY
4. ESTABLISH ACCESS WAY FROM WORK ROAD TO CONSTRUCTION ENTRANCE WITH NO ADDITIONAL FILL OR STONE
5. INSTALL SILT FENCE AS PER PLAN AND TO ESTABLISH LIMITS OF DISTURBANCE AREA
6. REMOVE EXISTING 8" BOARD SECTIONS FROM DAM TO ALLOW POND TO DEWATER (LEAVING WOOD ANCHOR POSTS IN PLACE)
7. INSTALL TEMPORARY SANDBAG COFFER DAM, 24" DEWATERING PIPE, AND SPLASH PAD. REMOVE COFFER DAM.
8. INSTALL COFFER DAM TO TEMPORARILY DIVERT WATER FLOW AROUND DAM CONSTRUCTION AREA
9. INSTALL DEWATERING PIT IN COFFER DAM AREA WITH A 50 GPM TRASH PUMP AND DISCHARGE PIPE TO DIRT BAG.
10. ESTABLISH STOCKPILE AREA WITH SILT FENCE AND HAY BALE PROTECTION
11. REMOVE DAM ANCHOR POSTS AND WOOD FOOT BRIDGE (LEAVING FOOTBRIDGE ANCHOR POSTS IN PLACE)
12. COMMENCE AND COMPLETE CONCRETE DAM CONSTRUCTION, STONE BANK STABILIZATION AND STREAM BED REPAIR
13. COMMENCE AND COMPLETE WOOD FOOT BRIDGE RE-FURBISHMENT
14. RESTORE DEWATERING PIT AND REMOVE COFFER DAM FROM CONCRETE DAM CONSTRUCTION AREA
15. INSTALL TEMPORARY SANDBAG COFFER DAM TO DIVERT FLOW FROM AROUND 24" DEWATERING PIPE
16. REMOVE 24" DEWATERING PIPE, RESTORE TO ORIGINAL GRADE AND REMOVE COFFER DAM. REPLACE SILT FENCE.
17. SPREAD DEWATERED EXCAVATION SPOILS OVER AREA TO BE RESTORED
18. REMOVE ANY EXCESS SOILS OFF SITE.
19. SPREAD MEADOW SEED, AND LAY BIODEGRADABLE STRAW EROSION CONTROL BLANKETS.
20. RECONSTRUCT STONE WALL AT END OF TEMPORARY ACCESS WAY
21. UPON MEADOW SEED ESTABLISHMENT AND COMPLETION OF PROJECT REMOVE SILT FENCE

MACHINERY TO BE EMPLOYED DURING CONSTRUCTION

1. 10 TON MINI EXCAVATOR WITH RUBBER TRACKS
2. SKID STEER WITH RUBBER TIRES
3. 3 TON DUMPTRUCK
4. CONCRETE TRUCK

ANY ALTERATION OF PLANS, SPECIFICATIONS, PLATS AND REPORTS BEARING THE SEAL OF A LICENSED PROFESIONAL ENGINEER OR LICENSED LAND SURVEYOR IS A VIOLATION OF SECTION 7209 OF THE NEW YORK STATE EDUCATION LAW, EXCEPT AS PROVIDED FOR BY SECTION 7209, SUBSECTION 2.

CITY OF NEW YORK
DEPT. OF ENVIRONMENTAL PROTECTION
BUREAU OF WATER SUPPLY
CIRCULATION AND ENGINEERING PROGRAM
APPROVED
FOR LATE AND SIGNATURE
SEE 1ST PAGE

GIS GEOGRAPHIC INFORMATION SYSTEMS

THE 2-FOOT CONTOURS DEPICTED ON THIS PLAN ARE INTENDED TO BE USED FOR PLANNING & PRELIMINARY ENGINEERING APPLICATIONS. THEY ARE NOT INTENDED TO BE USED IN ENGINEERING DESIGN AND DO NOT NEGATE THE NEED FOR A FIELD SURVEY. THE WESTCHESTER COUNTY GIS DATASET CONTAINS CONTOUR LINES MODELED AT A TWO FOOT INTERVAL. THE SOURCE INFORMATION USED IN THE COLLECTION OF THE DATASET WAS PART OF THE NEW YORK STATE DIGITAL ORTHOIMAGERY PROGRAM; PHOTOS TAKEN IN APRIL 2004. VERTICAL DATUM IS NAVD88.
THE COUNTY OF WESTCHESTER MAKES NO WARRANTY, EXPRESS OR IMPLIED, CONCERNING THE COMPLETENESS OR ACCURACY OF THE DATA AND ASSUMES NO LIABILITY WHATSOEVER FOR ANY PRODUCT OR ANALYSIS DERIVED FROM OR BASED ON THE DATA.

No.	Revision	Date	By
1.	REVISED IN RESPONSE TO NYCDEP COMMENTS	10/20/2016	EK

Previous Editions Obsolete

APPLICANT/OWNER:
MS. TRACEY WEISBERG
25 BENEDICT ROAD
SOUTH SALEM, NY 10590

JMC Planning, Engineering, Landscape Architecture & Land Surveying, PLLC
JMC Site Development Consultants, LLC
John Meyer Consulting, Inc.
120 BEDFORD ROAD • ARMONK, NY 10504
voice 914.273.5225 • fax 914.273.2102
www.jmcpllc.com

SITE PLAN, ACCESS, TEMPORARY COFFER DAM AND DEWATERING PLAN

WEISBERG RESIDENCE DAM
25 BENEDICT ROAD
TOWN OF LEWISBORO, NY

STATE OF NEW YORK • DAVID P. LOMBARDI • 071001 • LICENSED PROFESSIONAL ENGINEER

Drawn:	EK	Approved:	DL
Scale:	1" = 20'		
Date:	09/16/2016		
Project No:	15225		
15225-SITE	S-3 LAY	LAY.scr	
Drawing No:	S3		

COPYRIGHT © 2015 by JMC All Rights Reserved. No part of this document may be reproduced, stored in a retrieval system, or transmitted in any form or by means, electronic, mechanical, photocopying, recording or otherwise, without the prior written permission of JMC PLANNING, ENGINEERING, LANDSCAPE ARCHITECTURE & LAND SURVEYING, PLLC, JMC SITE DEVELOPMENT CONSULTANTS, LLC, JOHN MEYER CONSULTING, INC. (JMC). USE OF THIS DOCUMENT FOR ANY PURPOSE OTHER THAN THE PERMITTED PROJECT IS EXPRESSLY PROHIBITED.

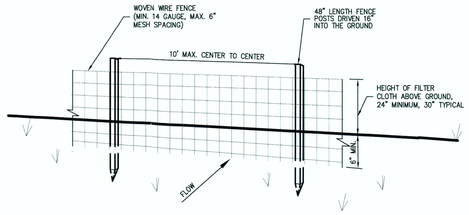

PERSPECTIVE VIEW

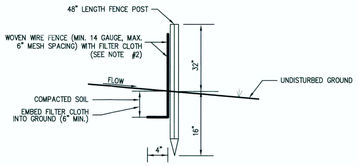

SECTION

NOTES:

1. WOVEN WIRE FENCE SHALL BE FASTENED SECURELY TO FENCE POSTS WITH WIRE TIES OR STAPLES. POSTS SHALL BE STEEL, EITHER T OR U TYPE OR HARDWOOD.
2. FILTER CLOTH SHALL BE FASTENED SECURELY TO WOVEN WIRE FENCE WITH TIES SPACED EVERY 24" AT TOP AND MID SECTION. FENCE SHALL BE WOVEN WIRE, 6" MAXIMUM MESH OPENING.
3. WHEN TWO SECTIONS OF FILTER CLOTH ADJOIN EACH OTHER, THEY SHALL BE OVERLAPPED BY SIX INCHES AND FOLDED. FILTER CLOTH SHALL BE EITHER FILTER X, MIRAFI 100X, STABLINKA T140N, OR APPROVED EQUAL.
4. PREFABRICATED UNITS SHALL BE GEOFAB, ENVIROFENCE, OR APPROVED EQUAL.
5. MAINTENANCE SHALL BE PERFORMED AS NEEDED AND MATERIAL REMOVED AND REPLACED WHEN "BULGES" DEVELOP IN THE SILT FENCE.

SILT FENCE | 1

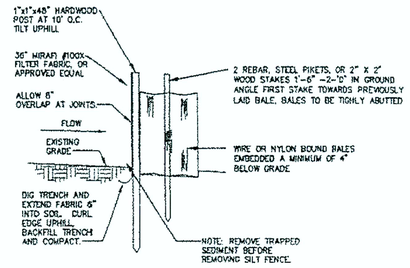

SILT FENCE / HAYBALE EROSION CONTROL

SILT FENCE/ HAYBALE EROSION CONTROL | 2

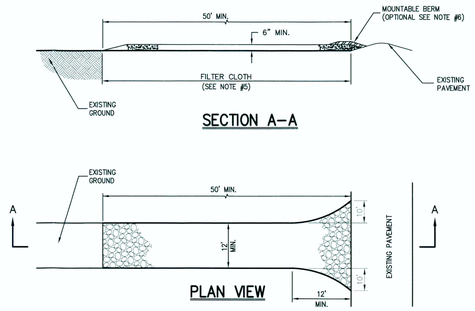

NOTES

1. STONE SIZE – USE 1" TO 4" STONE, OR RECLAIMED OR RECYCLED CONCRETE EQUIVALENT.
2. LENGTH – AS REQUIRED, BUT NOT LESS THAN 50 FEET.
3. THICKNESS – NOT LESS THAN SIX (6) INCHES.
4. WIDTH – 12 FOOT MINIMUM, BUT NOT LESS THAN THE FULL WIDTH AT POINTS WHERE INGRESS OR EGRESS OCCURS. 24 FOOT MINIMUM IF SINGLE ENTRANCE TO SITE.
5. FILTER CLOTH TO BE PLACED OVER THE ENTIRE WIDTH AND LENGTH OF AREA PRIOR TO PLACING OF STONE.
6. SURFACE WATER – ALL SURFACE WATER FLOWING OR DIVERTED TOWARD CONSTRUCTION ENTRANCES SHALL BE PIPED BENEATH THE ENTRANCE. IF PIPING IS IMPRACTICAL, A MOUNTABLE BERM WITH 5:1 SLOPES WILL BE PERMITTED.
7. MAINTENANCE – THE ENTRANCE SHALL BE MAINTAINED IN A CONDITION WHICH WILL PREVENT TRACKING OR FLOWING OF SEDIMENT ONTO PUBLIC RIGHTS-OF-WAY. THIS MAY REQUIRE PERIODIC TOP DRESSING WITH ADDITIONAL STONE AS CONDITIONS DEMAND AND REPAIR AND/OR CLEANOUT OF ANY MEASURE USED TO TRAP SEDIMENT. ALL SEDIMENT SPILLED, DROPPED, WASHED OR TRACKED ONTO PUBLIC RIGHTS-OF-WAY MUST BE REMOVED IMMEDIATELY.
8. WASHING – WHEELS SHALL BE CLEANED TO REMOVE SEDIMENT PRIOR TO ENTRANCE ONTO PUBLIC RIGHTS-OF-WAY. WHEN WASHING IS REQUIRED, IT SHALL BE DONE ON AN AREA STABILIZED WITH STONE AND WHICH DRAINS INTO AN APPROVED SEDIMENT TRAPPING DEVICE.
9. PERIODIC INSPECTION AND NEEDED MAINTENANCE SHALL BE PROVIDED AFTER EACH RAIN.

STABILIZED CONSTRUCTION ENTRANCE | 3

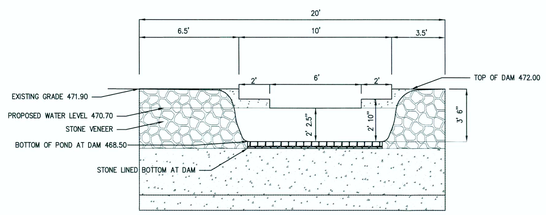

FRONT ELEVATION

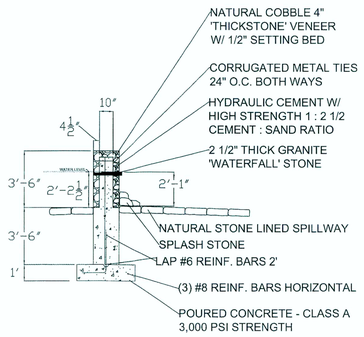

SIDE ELEVATION

STONE VENEER CONCRETE DAM
(DESIGNED BY OTHERS) | 4

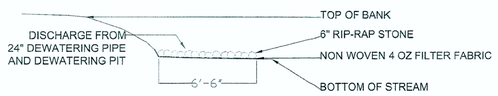

DEWATERING SPLASH PAD
(DESIGNED BY OTHERS) | 5

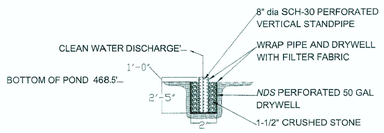

DEWATERING PIT
(DESIGNED BY OTHERS) | 6

CITY OF NEW YORK
DEPT. OF ENVIRONMENTAL PROTECTION
BUREAU OF WATER SUPPLY
REGULATORY AND ENGINEERING PROGRAMS
APPROVED
SEE FIRST PAGE FOR DATE AND SIGNATURE

No.	Revision	Date	By

Previous Editions Obsolete

APPLICANT/OWNER:
MS. TRACEY WEISBERG
25 BENEDICT ROAD
SOUTH SALEM, NY 10590

JMC Planning, Engineering, Landscape Architecture & Land Surveying, PLLC
JMC Site Development Consultants, LLC
John Meyer Consulting, Inc.
120 BEDFORD ROAD • ARMONK, NY 10504
voice 914.273.5225 • fax 914.273.2102
www.jmcpllc.com

DETAILS

WEISBERG RESIDENCE DAM
25 BENEDICT ROAD
TOWN OF LEWISBORO, NY

ANY ALTERATION OF PLANS, SPECIFICATIONS, PLATS AND REPORTS BEARING THE SEAL OF A LICENSED PROFESSIONAL ENGINEER OR LICENSED LAND SURVEYOR IS A VIOLATION OF SECTION 7209 OF THE NEW YORK STATE EDUCATION LAW, EXCEPT AS PROVIDED FOR BY SECTION 7209, SUBSECTION 2.

STATE OF NEW YORK · DAVID P. LOMBARDI · 071001 · LICENSED PROFESSIONAL ENGINEER

Drawn:	EK	Approved:	DL
Scale:	NOT TO SCALE		
Date:	09/16/2016		
Project No:	15225		
15225-Details	D-3 DETAILS	–	
Drawing No:	D3		

COPYRIGHT © 2016 by JMC All Rights Reserved. No part of this document may be reproduced, stored in a retrieval system, or transmitted in any form or by means, electronic, mechanical, photocopying, recording or otherwise, without the prior written permission of JMC PLANNING, ENGINEERING, LANDSCAPE ARCHITECTURE & LAND SURVEYING, PLLC | JMC SITE DEVELOPMENT CONSULTANTS, LLC | JOHN MEYER CONSULTING, INC. (JMC). Any modifications or alterations to this document without the written permission of JMC shall render them invalid and unusable.

KELLARD SESSIONS
CONSULTING, P.C.

John Kellard, P.E.
David Sessions, RLA, AICP

MEMORANDUM

TO: Chairman Jerome Kerner, AIA and
Members of Lewisboro Planning Board

CC: Ciorsdan Conran
Judson Siebert, Esq.

FROM: Jan K. Johannessen, AICP
Joseph M. Cermele, P.E., CFM
David J. Sessions, RLA, AICP
Town Consulting Professionals

DATE: November 30, 2016

RE: Wilder Balter Partners, Inc.
New York State Route 22
Sheet 5, Block 10776, Lot 19, 20 & 21

The following comments pertain to the submitted Noise Assessment Report:

1. The Noise Assessment Report should include a cover page and/or footer identifying the name of the preparer and the date of the report (original preparation and revision dates).

2. The report shall be revised to include a table identifying the distance (in feet) between the closest travel lane associated with NYS Route 22, I-684, and the Metro-North Railroad and the three (3) noise measurement locations and Buildings 1 - 5, as follows:

Noise Source	Location							
	L-1	L-2	L-3	Bldg-1	Bldg-2	Bldg-3	Bldg-4	Bldg-5
NYS Route 22 (Northbound)								
I-684 (Northbound)								
I-684 (Southbound)								
Metro-North Railroad (Southbound)								

3. Table 3 should include columns for Lmin and Lmax, as provided within the originally submitted (undated) Noise Assessment Report. The originally submitted Noise Assessment Report indicated a maximum noise measurement of 70.7 dBA at Location 2

(7:22 a.m. - 12:39 p.m.). The applicant should explain the reason for this high noise measurement and the duration of this noise level, if possible.

4. The applicant should adjust the timing of the noise collected on September 27, 2016 to be consistent with that collected on November 1, 2016 (i.e., 6:00 a.m. – 9:00 a.m.).

5. The report should identify and describe the elevation of each noise receptor compared to the identified sound sources, as well as the topography between each (existing and proposed).

6. The report should be revised to include a table of common noise sources and associated noise levels for comparison purposes.

7. While the HUD criteria appears to be correctly identified (not exceeding 65dBA is acceptable), the report should note the exterior noise goal for residential uses established by the HUD and the EPA is 55 decibels (see Title 24 CFR, Section 51.101A(8)).

8. The Town regulates noise under Town Code Chapter 160, Noise, and under Section 220-60 of the Zoning Code. While "transient noises of moving sources, such as automobile, trucks, airplanes and railroads," is exempt from the noise level regulations, the Code identifies a method of measurement and provides maximum permitted sound pressure levels. The report should identify if noise measurements were taken in compliance with the Code and a comparison should be made between the gathered noise measurements and the maximum allowable provided under the Code.

9. Page 3 of 5 of the Noise Assessment Report states that SoundPro DL meters were calibrated before measurements were taken; the applicant should identify whether noise meters were calibrated following the recording time. If the meters were not calibrated following the recordings, the applicant should explain the potential changes in the results, if any, based on not performing a calibration after the recording period had been completed.

Document Reviewed, prepared by Tim Miller Associates, Inc., and dated (last revised) November 8, 2016:

- Noise Assessment – WB Lewisboro AFFH Residential Development

JKJ/dc

T:\Lewisboro\Correspondence\LW4093JJ-LWPB-WilderBalter-NoiseStudyRev-Memo-11-16.docx

TIM
MILLER
ASSOCIATES, INC.
10 North Street, Cold Spring, New York 10516 *Phone (845) 265-4400* *Fax (845) 265-4418*

December 12, 2016

Town of Lewisboro Planning Board
Attn: Chairman Jerome Kerner
20 North Salem Road, Suite L/Lower Level
PO Box 725
Cross River, New York 10518

Re: **Noise Assessment**
Proposed AFFH Multifamily Development
NYS Route 22, Tax map: Sheet 5, Block 10776, Lots 19, 20 & 21
Town of Lewisboro, New York

Dear Chairman Kerner and Members of the Planning Board:

Attached, please find nine (9) copies of revised Noise Assessment for the Wilder Balter Partners, Inc. proposed AFFH residential development. The Noise Assessment has been revised in response to the November 30, 2016 memorandum from Kellard Sessions Consulting, P.C.

Responses to specific comments are as follows:

1) A cover page with the date of the report and revision dates is provided.

2) Page 1, Table 1: A table has been provided to identify distances between noise sources and the noise measurement locations and the proposed buildings.

3) Page 6, Table 4: The table has been revised to include the Lmin and Lmax noise measurements.

4) Page 6, Table 4: The reporting interval for the noise measurements collected on September 27, 2016 has been adjusted to be more consistent with the measurements from November 1, 2016 (see Table 4).

5) Pages 4 and 5: A discussion has been added regarding the elevations of the noise monitoring locations, the elevations of the existing noise sources and the topography between noise sources and monitoring locations.

6) Page 8: A Table has been attached which provides common noise sources and associated noise levels (see Table E).

7) Page 3, paragraph 3: Text has been added regarding the exterior noise goals for residential uses established by HUD and EPA.

8) Page 3, paragraphs 1 and 5: Text has been added to clarify the applicability of the Town Code Chapter 160 Noise and the Performance Standards in the Zoning Code (Section 220-60).

9) Page 5, paragraph 2: Text has been added to clarify the calibration of the noise meters.

Please advise if you have any questions or require additional information.

Sincerely,

Jon P. Dahlgren
Senior Geologist
TIM MILLER ASSOCIATES, INC.

Cc: J. Bainlardi, Wilder Balter Partners, Inc.
J. Contelmo, Insite Engineering
Enclosure

Noise Assessment Report

WB Lewisboro AFFH Residential Development
Route 22
Town of Lewisboro, New York

Applicant:
WILDER BALTER PARTNERS, INC.
570 Taxter Road, Elmsford, New York, 10523
Contact: John Bainlardi
(914) 347-3333

Prepared by:
TIM MILLER ASSOCIATES, INC.
10 North Street, Cold Spring, New York 10516
Contact: Frederick P. Wells, RLA
(845) 265-4400

Originally submitted: ***October 6, 2016***
Revised: ***November 8, 2016***

Revised: December 12, 2016

Noise Assessment Report
WB Lewisboro AFFH Residential Development
Town of Lewisboro, New York

Introduction

The property proposed for the WB Lewisboro AFFH Residential Development is currently undeveloped vacant land. The development site is located on the east side of NYS Route 22, immediately east of Interstate 684 and approximately three-quarters of a mile south of Route 138. The subject property is bounded on the north and east by vacant land, to the south by low density residential properties and on the west by NYS Route 22. Interstate 684 lies directly west of NYS Route 22 and the highway parallels the Metro North rail line.

The residential development proposed for the site is a 46-unit multi-family affordable development in five buildings. The proposed residential buildings are set-back some distance from Route 22. Buildings 1 and 2 are approximately 215 to 225 feet from the north-bound travel lane of Route 22 and these buildings are approximately 350 to 395 feet from the northbound travel lanes of Interstate 684 (Building 1 and 2 respectively).

Approximate distances between the existing noise sources and the proposed residential buildings are provided in Table 1, below. This table also provides the distances between the noise sources and the noise monitoring locations, which are shown graphically in Figure 1.

Table 1
Distance Between Noise Sources and Receptors (in feet)

Noise Source	Location							
	L-1	L-2	L-3	Bldg-1	Bldg-2	Bldg-3	Bldg-4	Bldg-5
NYS Route 22 (Northbound)	230	120	285	215	225	300	415	650
I-684 (Northbound)	370	270	475	350	395	500	615	850
I-684 (Southbound)	433	333	535	410	460	560	680	910
Metro-North Railroad (Northbound)	534	423	587	522	527	600	714	950

This noise assessment is intended to provide an analysis of the existing highway traffic noise in the vicinity of the proposed WB Lewisboro residential development and the potential impacts of that noise on future residents.

Noise Background

Noise can be defined as undesirable or "unwanted sound". Even though noise is somewhat subjective, it affects the full range of human activities and must be considered in local and regional planning. Most of the sounds heard in the environment are not

composed of a single frequency, but are a band of frequencies, each with a different intensity or level. Levels of noise are measured in units called decibels. Since the human ear cannot perceive all pitches or frequencies equally well, these measures are adjusted or weighted to correspond to human hearing.

This adjusted unit is known as the A-weighted decibel, or dBA. Since dBA describes a noise level at just one instant and since ambient noise levels are constantly varying, other ways of describing noise levels, especially over extended periods, are needed. A commonly used descriptor is the Leq.

The Leq noise level is the level of a constant noise source which has been averaged over a period of time, based upon a measurement over a certain time period. A one decibel change in noise is the smallest change detectable by the human ear under suitable laboratory conditions. Under normal conditions, a change in noise level of two or three decibels is required for the average person to notice a difference. Table 1 shows the typical perception of noise change. Ten dBA represents a doubling or halving of the loudness of sound.

To the average person in an outside environment and close to the noise source, a noise level increase of 2 to 3 dBA is barely perceptible, an increase of 5 dBA is noticeable, and an increase of 20 dBA is perceived as a dramatic change. Annoyance frequently results from increases of 10 dBA or more, depending on the frequency and duration of the noise events. A table of common noise sources and associated noise levels is attached as Table E. The Table is from the NYSDEC *Assessing and Mitigating Noise Impacts* (revised 2001).

Table 2
PERCEPTION OF NOISE CHANGES

Change (dBA)	Human Perception of Change
2-3	Barely perceptible
5	Readily noticeable
10	A doubling or halving of the loudness of sound
20	A dramatic change
40	Difference between a faintly audible sound and a very loud sound

SOURCE: Bolt Beranek and Neuman, Inc., Fundamentals and Abatement of Highway Traffic Noise, Report No. PB-222-703. Prepared for Federal Highway Administration, June 1973.

Noise Standards

The Town of Lewisboro has noise standards provided in the Town Code (Chapter 160. Noise). The purpose of the chapter is to "prevent unreasonable, unreasonably loud, disturbing or unnecessary noise which unreasonably interferes with the sleep, comfort, repose, health or safety of others". The Code applies to specific activities and noise sources including construction, the playing of music, loudspeakers, yelling and the operations of vehicles, among others. No specific sound levels or standards are provided in Chapter 160, but any "unreasonable, unreasonably loud, disturbing or unnecessary noise" is prohibited.

Article VIII - Performance Standards of the Zoning Code (Chapter 220) sets specific standards that apply to "control noise perceptible beyond the boundaries of the site of the use" (Section 220-59.B). The performance standards specifically apply to nonresidential uses, and the following uses and activities are exempted: "1) Noises not directly under the control of the property user and 4) transient noises from moving sources, such as automobiles, trucks, airplanes and railroads" (Referenced sections of the Town Code are attached). Therefore, there are no specific noise levels in the Town Code that apply to the proposed WB Lewisboro development.

The New York State Department of Environmental Conservation (NYSDEC) policy and guidance document "*Assessing and Mitigating Noise Impacts*" (2000) provides noise impact assessment methods, examines the circumstances under which sounds create significant noise impacts, and identifies noise avoidance and mitigation measures. The policy is primarily provided to "evaluate the potential for adverse impacts of sound generated and emanating to receptors outside of the facility or property", during the Department's review of an application for a permit. Nevertheless, the NYSDEC policy and guidance document provides methods to assess potential noise impacts, and those methods were used for this noise assessment, as appropriate. The document discusses thresholds for significant sound pressure level (or decibel level-dBA) increases above ambient sound levels. The document does not provide specific noise thresholds, but rather how the increases in noise from a new noise source may impact surrounding land uses and receptors.

The United States Department of Housing and Urban Development (HUD) has adopted environmental criteria, and guidelines for determining acceptability of federally assisted projects (24 CFR Part 51 – Environmental Criteria and Standards). The standards consider an exterior noise level of 65 dBA to be acceptable for residential uses. These standards reflect an EPA goal that continuous exterior noise levels do not exceed 65 decibels. The exterior noise goal for exterior uses established by HUD and the EPA is 55 decibels (see Title 24 CFR, Section 51.101A(8)).

The 65 decibel criterion is more restrictive than the criteria used by the Federal Highway Administration (FHWA) design standards for noise. The FHWA uses 67 decibels as a noise criterion for residential areas (23 CFR 772 – *Procedures for Abatement of Highway Traffic Noise and Construction Noise*). The FHWA regulations apply to any highway or multi-modal projects that require FHWA approval or Federal funding. Although the proposed WB Lewisboro residential development is not a FHWA or HUD funded project, the noise standards applied to HUD and FHWA projects can be used for reference and as a comparison of noise levels.

The noise study conducted for the WB Lewsiboro property was specifically designed with the understanding that the Town Zoning Code did not apply to the proposed development, but rather the around the question of how does existing off-site noise sources (highway traffic noise) potentially impact proposed on-site receptors (proposed residences). Therefore, the noise study did not specifically collect noise measurements at the property boundaries and the noise meters were not set up to measure octave bands, consistent with the Town Code. Instead, the noise study was designed consistent with NYSDEC and HUD noise guidelines; collecting measurements at the proposed receptors and using Leq as a basis for noise level comparison.

Table 3 HUD SITE ACCEPTABILITY STANDARDS	
	Outdoor Noise (dBA)
Acceptable	Not exceeding 65
Normally Unacceptable	65 to 75
Unacceptable	Above 75
Source: Title 24, Code of Federal Regulations, Part 5l.103 (c), Exterior Standards.	

Ambient Noise Measurements

In order to assess existing noise conditions, noise measurements were collected by Tim Miller Associates, Inc. on September 27, 2016 and on October 31 through November 1 (24 hour period) at three locations: 1) near the southwestern corner of proposed Building 1, 2) at the crest of the bedrock outcrop above Route 22 in the northwest portion of the site, and 3) in the location of the proposed play area between Buildings 2 and 3. The measurement locations are shown in Figure 1 and the results of the measurements are summarized in Table 4, below. The distances between the noise sources (Route 22, Interstate 684 and the Metro North railway) are provided in Table 1, above.

The topography between the noise sources and monitoring locations (and related future residential building locations) has an influence on measured noise levels. The relation between monitoring locations and noise sources is described as follows.

- Location 1: Location 1 is near the southwest corner of proposed Building 1 at an elevation of approximately 290 feet. The elevation of Route 22 is at approximately 240 feet or 50 feet lower than the proposed building and monitoring location. Interstate 684 is slightly lower with an elevation of approximately 220 feet in the vicinity of the site[1]. The topography between Location 1 and Route 22 rises onsite to a rock outcrop (elevation 304 feet) and then drops steeply to Route 22. There is no direct line of sight between Location 1 and Route 22 or Interstate 684 and therefore the rock outcrop provides a natural noise barrier in this location. The proposed grading will not substantially alter the topography between Building 1 and the existing noise sources.

- Location 2: Location 2 is on a rock outcrop close to the western property line and overlooking Route 22 and Interstate 684. The location has a direct line of sight to traffic on these highways and the Metro-North railroad. The elevation of this location is approximately 304 feet which is above the elevation of Route 22 (elevation 240 feet) and I-684 (elevation 220 feet). The topography in this location will not change with the proposed development since no grading is proposed in this area.

- Location 3: This location is between proposed Buildings 2 and 3, in a proposed outdoor play area. The elevation at this location is approximately 282 feet and will remain at a similar elevation post construction. This location is approximately 37 feet above Route 22 (elevation 245 feet) and 62 feet above I-684 (elevation

[1] USGS Topographic Map, Croton Falls, 1981.

220 feet). This area is partially blocked from Route 22 and Interstate 684 by the rock outcrop at the western border (elevation 275 to 278 feet). The location has a direct line of sight towards the southwest to Route 22 and Interstate 684, and the passing traffic is visible from this location. Grading will occur in the area between this location and Route 22 for the construction of the driveway entrance and parking areas. The proposed grading will not substantially alter the topography between Buildings 2 and 3 and the existing noise sources.

Noise measurements were collected with Soundpro DL data logging noise meters. The meters were calibrated before measurements using an acoustical calibrator, as a quality control measure since the instruments were calibrated by the equipment rental service, prior to sending to TMA. The meters were not calibrated following the recordings since potential changes in the readings over the recording period are minimal[2].

September 27, 2016 Measurements

Weather conditions during the measurements on September 27, 2016 were overcast and cool, with no noticeable wind. Measurements were collected on a continuous basis during the morning of September 27, 2016. This measurement period provides average noise levels during a typical morning commuting period.

October 31 to November 1, 2016 Measurements

Measurements were collected over a 24-hour period beginning in the morning of October 31, 2016 and extending to the morning of November 1, 2016. Weather conditions during this period were partly cloudy to clear and cool. A moderate wind was present during the daytime period, but less so during evening and overnight periods. This measurement period provides average noise levels during a typical afternoon commuting period (4:00 PM to 7:00 PM, the morning commuting period (6:00 AM to 9:00 AM) and over a 24-hour period (9:00 AM to 9:00 AM).

The monitoring periods and measurement results are provided in Table 4, below.

[2] Telephone Conversation: David German, Pine Environmental Services, LLC, December 8, 2016.

Table 4 Noise Measurements				
Location	**September 27, 2016 AM Period**	**Noise Level dBA - Leq**	**Lmin**	**LMax**
Location 1	7:18 AM – 9:00 AM	59.4	55.7	61.8
Location 2	7:24 AM – 9:00 AM	67.3	63.2	70.7
Location 3	7:22 AM – 11:45 AM*	58.1*	49.0	63.0
	October 31, 2016 PM Period			
Location 1	4:00 PM – 7:00 PM	57.6	54.6	60.2
Location 2	4:00 PM – 7:00 PM	66.6	62.5	70.2
Location 3	4:00 PM – 7:00 PM	58.9	56.3	63.5
	November 1, 2016 AM Period			
Location 1	6:00 AM – 9:00 AM	58.1	55.4	60.5
Location 2	6:00 AM – 9:00 AM	66.8	63.4	69.6
Location 3	6:00 AM – 9:00 AM	60.7	57.1	66.9
	Oct. 31 thru Nov.1, 2016 24 hour Period			
Location 1	9:00 AM to 9:00 AM	56.5	38.3	61.7
Location 2	9:00 AM to 9:00 AM	65.2	46.2	71.3
Location 3	9:00 AM to 9:00 AM	58.1	39.6	69.7
Note: The Leq provided for Location 3 on September 27, 2016 covers the period shown (7:22 AM through 11:45 AM). An Leq reading from 7:22 AM to 9:00 AM could not be provided due to instrument malfunction in the data retrieval.				

During measurements, the traffic noise from I-684 and Route 22 was noticeable and the dominant sound at the monitoring locations. Noise from the periodic passage of Metro-North trains, including air-horns was also observed during monitoring. No other noise from off-site sources were observed. Noise from wind and the rustling of leaves was observed during daytime periods on October 31st, but no wind was present on the morning of November 1st.

A maximum reading of 70.7 dBA was measured at 7:24 AM on September 27, 2016 and 71.3 dBA at 6:44 P.M on October 31, 2016. These measurements were both recorded at Location 2, which is near the western property line and directly above Route 22 and Interstate 684. These readings were each recorded over a duration of one minute. The reading on September 27, 2016 was during the instrument set-up and therefore was attributed to close contact with the microphone. The source of the noise on October 31, 2016 is not known but is likely attributed to emergency service sirens or truck horns on I-684.

As indicated in the results, the average noise levels at the three monitoring locations were quite consistent on different days and during the morning and afternoon commuting periods. Noise levels were lower when averaged over a 24-hour period, as would be anticipated.

Conclusions

The average noise levels (Leq) measured at outdoor locations near the proposed residential buildings (Locations 1 and 3) at the subject site were below HUD and FHWA noise standards for residential settings.

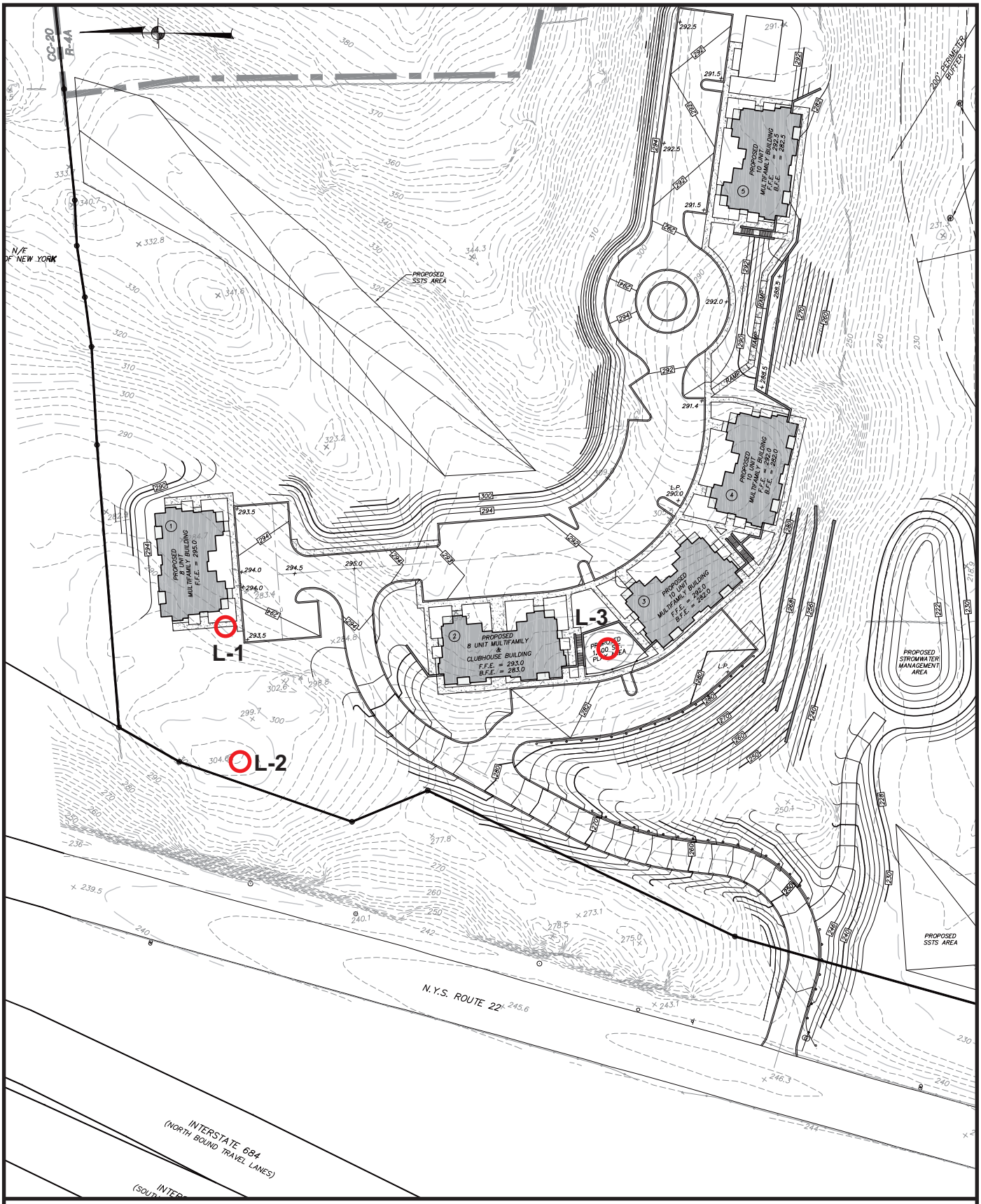

N
E
S
W

Figure 1: Noise Monitoring Location Plan

WB Lewisboro Affordable Housing

Town of Lewisboro, Westchester County, New York

Base Map: Insite Engineering, Surveying & Landscape Architecture, P.C.

Approx. Scale: 1" = 115'

File 15038 10/03/16

Tim Miller Associates, Inc.,10 North Street, Cold Spring, New York 10516 (845) 265-4400 Fax (845) 265-4418

Table E

Sound Source	dB(A)°	Response Criteria
	150	
Carrier Deck Jet Operation	140	
	130	Painfully Loud Limit Amplified Speech
Jet Takeoff (200 feet) Discotheque Auto Horn (3 feet) Riveting Machine	120	
	110	Maximum Vocal Effort
Jet Takeoff (2000 feet) Shout (0.5 feet)	100	
N.Y. Subway Station Heavy Truck (50 feet)	90	Very Annoying Hearing Damage (8 hours, continuous exposure)
Pneumatic Drill (50 feet)	80	Annoying
Freight Train (50 feet) Freeway Traffic (50 feet)	70	Telephone Use Difficult Intrusive
Air Conditioning Unit (20 feet)	60	
Light Auto Traffic (50 feet)	50	Quiet
Living Room Bedroom	40	
Library Soft Whisper (15 feet)	30	Very Quiet
Broadcasting Studio	20	
	10	Just Audible
	0	Threshold of Hearing

(The Aggregate Handbook, 1991)

Town of Lewisboro, NY
Thursday, September 29, 2016

Chapter 160. Noise

[HISTORY: Adopted by the Town Board of the Town of Lewisboro 5-9-1989 by L.L. No. 3-1989. Amendments noted where applicable.]

GENERAL REFERENCES
Dog control — See Ch. **105**, Art. **I**.

§ 160-1. Title.

This chapter shall be known as the "Town of Lewisboro Noise Control Law."

§ 160-2. Purpose.

It is the purpose of this chapter to prevent unreasonable, unreasonably loud, disturbing or unnecessary noise which unreasonably interferes with the sleep, comfort, repose, health or safety of others.

§ 160-3. Definitions.

As used in this chapter, the following terms shall have the meanings indicated:

PERSON
One or more natural persons of either sex, corporations, partnerships, associations, membership societies and all other entities capable of being sued.

SELF-PROPELLED VEHICLE
Any vehicle which is propelled or drawn on land or on the frozen surface of a lake by a motor, such as but not limited to passenger cars, trucks, truck-trailers, semitrailers, campers, go-carts, snowmobiles, amphibious craft on land, dune buggies, all-terrain vehicles, racing vehicles and motorcycles.

SOUND REPRODUCTION DEVICE
Any device that is designed to be used or is actually used for the production or reproduction of sound, including but not limited to any amplified musical instrument, radio, television, tape recorder, phonograph, loudspeaker, public-address system or any other sound-amplifying device.

UNREASONABLE, UNREASONABLY LOUD, DISTURBING OR UNNECESSARY NOISE
Any excessive or unusually loud sound or any sound which either annoys, disturbs, injures or endangers or interferes with the sleep, comfort, repose, health or safety of a reasonable person of normal sensitivities or which causes injury to animal life or damage to property or business.

§ 160-4. Prohibited acts.

No person shall make, cause or permit to be made any unreasonable, unreasonably loud, disturbing or unnecessary noise within the geographical boundaries of the Town of Lewisboro.

§ 160-5. Specific violations.

The following acts and the causes thereof are declared to constitute unreasonable, unreasonably loud, disturbing or unnecessary noise:

A. The use of any sound reproduction device inside a structure in such a manner as to result in the sound or any part thereof from such device to be projected therefrom outside of the structure or out of doors and heard from any residential dwelling.

B. The creation of noise in connection with the loading or unloading of any vehicle between 7:00 p.m. and 8:00 a.m. on any day and at any time on Sunday.

C. The operation of any sound reproduction device on any boat or other vessel so that the sound therefrom is audible on land.

D. In the process of any construction, drilling or demolition operations, between the hours of 7:00 p.m. and 7:00 a.m. the following day or at any time on Sunday, to operate or use any tools, pile driver, pneumatic hammer, tractor, derrick, electrical hoist, gasoline- or electric-powered saw or other mechanical apparatus or equipment, the use of which is attended by noise.

E. The keeping of any animal or bird which, by causing noise, shall annoy or disturb the quiet, comfort or repose of a reasonable person of normal sensitivities.

F. The playing of music or a sound reproduction device or the operation of any radio, television receiver or phonograph in such a manner and with such volume, between the hours of 11:00 p.m. and 8:00 a.m. the following day, of a degree as to annoy or disturb the quiet, comfort or repose of a reasonable person of normal sensitivities in any dwelling or residence.

G. The creation of any sound or noise from any device known as a "sound truck" or motor vehicle containing an amplifying system, whereby sounds, music or words are transmitted upon the public streets or highways.

H. The sounding of any horn or other auditory signaling device on or in any motor vehicle except to serve as a danger warning.

I. The operation of any self-propelled vehicle or boat which creates a noise of a degree so as to annoy or disturb the quiet, comfort or repose of a reasonable person of normal sensitivities.

J. The shouting, crying or bellowing of peddlers, hawkers and vendors.

K. The use of any drum, loudspeaker or other instrument or device for the purpose of attracting attention to any business.

L. Yelling or shouting at any time or place so as to annoy or disturb the quiet, comfort and repose of a reasonable person of normal sensitivities.

M. Any other excessive or unusually loud sound which either annoys, disturbs, injures or endangers the comfort, repose, health, peace or safety of a reasonable person of normal sensitivities, except that the enumerated provisions of Subsections **A** through **L** of this section shall govern and regulate the actions and activities therein prohibited and nothing contained in this subsection shall apply to those actions and activities set forth in Subsections **A** through **L** of this section.

§ 160-6. Responsibility of owner, tenant or person in charge.

The owner, tenant and person in charge of the premises on which a violation under the provisions of this chapter has been committed shall be deemed to have permitted such violation on the subject premises and, as such, shall be guilty of such violation.

§ 160-7. Exceptions.

A. Nothing contained in this chapter shall be construed to prevent the production of music or the use of an amplifying system in connection with any military, civic or authorized parade, religious ceremony or at any school-sponsored or municipally sponsored activities.

B. The provisions of this chapter shall not apply to the sounding of bells, horns, sirens or any other instruments by a fire apparatus or station, police or any other vehicle or person in the event of an emergency or other such condition or situation.

C. The provisions of this chapter shall not apply to sounds created by church bells or chimes.

§ 160-8. Town Board authorized to suspend provisions.

The Town Board is hereby authorized, by resolution, to suspend any of the provisions of this chapter in connection with any holiday celebration or upon any occasion of special public interest, for such time and upon such conditions as shall be prescribed by the Town Board.

§ 160-9. Penalties for offenses.

A. Any person violating § **160-5A** of this chapter shall be guilty of a violation punishable by a fine of not less than $25 and not more than $500 or by imprisonment for a term not to exceed 15 days, or by both such fine and imprisonment, if the structure from which the subject sound is projected is a residential dwelling.

B. Any person violating § **160-5A** of this chapter shall be guilty of a violation punishable by a fine of not less than $100 and not more than $1,000 or by imprisonment for a term not to exceed 15 days, or by both such fine and imprisonment, if the structure from which the subject sound is projected is other than a residential dwelling.

C. Any person violating § **160-5C**, **E**, **F**, **H**, **J**, **L** or **M** of this chapter shall be guilty of a violation punishable by a fine of not less than $25 and not more than $500 or by imprisonment for a term not to exceed 15 days, or by both such fine and imprisonment.

D. Any person violating § **160-5B**, **D**, **G**, **I** or **K** of this chapter shall be guilty of a violation punishable by a fine of not less than $100 and not more than $1,000 or by imprisonment for a term not to exceed 15 days, or by both such fine and imprisonment.

Town of Lewisboro, NY
Monday, October 3, 2016

Chapter 220. Zoning

Article VIII. Performance Standards

§ 220-58. Conformance to standards required.

A. No nonresidential use shall hereafter be established, altered, moved or expanded unless it complies with the performance standards set forth in this article. Continued conformance with such standards shall be a requirement for the continuance of any certificate of occupancy.

B. Central utility systems serving three or more dwelling units, including but not limited to systems providing heat, water, air conditioning, sewage treatment, garbage collection and electrical power, shall be deemed to be nonresidential uses for the purpose of this article.

§ 220-59. Purpose.

Consistent with the general purposes of this chapter, performance standards shall set specific controls on potentially objectionable external aspects of nonresidential uses so as to:

A. Reduce to a reasonable minimum the dissemination of smoke, gas, dust, odor or other atmospheric pollutant outside the building in which the use is conducted.

B. Control noise perceptible beyond the boundaries of the site of the use.

C. Prevent the discharge of untreated or insufficiently treated wastes into any watercourse.

D. Prevent the dissemination of vibration, heat or electromagnetic interference beyond the immediate site on which the use is located.

E. Prevent physical hazard by reason of fire, explosion, radiation or any similar cause.

F. Regulate and control the generation and flow of vehicular traffic so as to prevent hazardous conditions, traffic congestion and excessive noise in the streets.

§ 220-60. Noise.

A. Method of measurement. For the purpose of measuring the intensity and frequencies of sound, sound level meters and octave band filters shall be employed. Octave band analyzers calibrated with pre-1960 octave bands (American Standards Association Z24.10-1953, Octave Band Filter Set) shall be used. Sounds of short duration, which cannot be measured accurately with the sound level meter, shall be measured with an impact noise filter in order to determine the peak value of the impact.

B. Maximum permitted sound pressure level. The decibels resulting from any activity, whether open or enclosed, shall not exceed at any point, on or beyond any lot line, the maximum decibel level for the designated octave band as set forth in the following table, except that where the lot lies within 200 feet of a residence district, whether within or without the Town, the maximum permitted decibel level at any point on or beyond the district boundary shall be reduced by six decibels from the maximum permitted level set forth in the table, and further, except that such reduction shall also apply to any sound emitted between the hours of 9:00 p.m. and 7:00 a.m., and all day Sunday.

Octave Band (cycles per second)	**Sound Pressure Level (decibels)**
0 to 74	66
75 to 149	58
150 to 299	55
300 to 599	50
600 to 1,199	45
1,200 to 2,399	42
2,400 to 2,799	38

Octave Band (cycles per second)	Sound Pressure Level (decibels)
4,800 to 20,000	35

C. Exemptions. The following uses and activities shall be exempt from the noise level regulations:

(1) Noises not directly under the control of the property user.

(2) Noises emanating from construction and maintenance activities between 8:00 a.m. and sunset.

(3) The noises of safety signals, warning devices, emergency pressure relief valves or other emergency warning signals.

(4) Transient noises of moving sources, such as automobile, trucks, airplanes and railroads.

§ 220-61. Vibrations.

A. Method of measurement. For the purpose of measuring vibration, a three-component measuring system approved by the Town Engineer shall be employed.

B. Maximum permitted steady state and impact vibration displacement. No activity shall cause or create a steady-state or impact vibration on any lot line with a vibration displacement by frequency bands in excess of that indicated in the following table:

Frequency (cycles per second)	Vibration Displacement (in inches) Steady-State	Impact
Under 10	0.0005	0.0010
10 to 19	0.0004	0.0008
20 to 29	0.0003	0.0006
30 to 39	0.0002	0.0004
40 and over	0.0001	0.0002

§ 220-62. Smoke, dust and other atmospheric pollutants.

A. General control. The emission of smoke and other particulate matter shall not be permitted, regardless of quantity, if it will be in any way detrimental to the public health, safety, welfare or comfort or a source of damage to property.

B. Method of measurement of smoke. For the purpose of grading the density of smoke, the Ringelmann Smoke Chart shall be used to determine the total smoke units emitted. A reading shall be taken every minute for an hour or, if less than an hour, until the smoke units emitted exceed the number allowed by these regulations. Each reading shall be multiplied by the number of minutes during which it was observed and the product added.

C. Maximum permitted emission of smoke. There shall be no measurable emission of smoke, gas or other atmospheric pollutant. The emission of one smoke unit per hour and smoke with discernible density of No. 1 on the Ringelmann Smoke Chart shall be prohibited.

D. Maximum permitted emission of dust.

(1) The emission of dust related to combustion for indirect heating from any source shall not exceed 0.30 pound of dust per 1,000 pounds of flue gas adjusted to 50% excess air for combustion.

(2) There shall be no measurable emission of dust or other particulate matter not related to combustion for indirect heating.

(3) All properties shall be suitably improved and maintained with appropriate landscaping and paving or other type of improvement, so that there will be no measurable windblown dust or other similar types of air pollution created.

§ 220-63. Odorous matter.

No land use shall be permitted which emits any discernible odor outside the building in which the use is conducted.

§ 220-64. Toxic or noxious matter.

No use shall be permitted which will cause any dissemination whatsoever of toxic or noxious matter outside the building in which the use is conducted.

§ 220-65. Radiation and electromagnetic interference.

A. Radiation. The handling, storage or disposal of radioactive materials or waste by-products, whether or not licensed by the Atomic Energy Commission, shall be conducted only in accordance with the standards established in Title 10, Chapter I, Part 20, Code of Federal Regulations, Standards for Protection Against Radiation, as amended, and in accordance with any applicable laws or regulations.

B. Electromagnetic interference. No operation shall be permitted which produces any perceptible electromagnetic interference with normal radio or television reception in any area within or without the Town.

§ 220-66. Fire, explosive hazard and heat.

A. Fire and explosive hazard. No storage or manufacture of explosives or solid materials or solid products which burn actively or which have a low ignition temperature, a high rate of burning or create great heat under ordinary temperature conditions shall be permitted.

B. Heat. There shall be no emission of heat which would cause a temperature increase in excess of 1° F. along any adjoining lot line, whether such change be in the air, in the ground or in any watercourse or water body.

§ 220-67. Liquid or solid wastes.

The discharge of any or all wastes shall be permitted only if in complete accordance with all standards, laws and regulations of the Westchester County Health Department, New York State Department of Environmental Conservation or any other regulatory agency having jurisdiction. Facilities for the storage of solid waste shall be so located and designed as to be screened from the street or from any adjoining property and so as to discourage the breeding of rodents or insects.

§ 220-68. Vehicular traffic.

No business or industrial use shall be permitted where it is determined by the Town Board that the type and number of vehicle trips it is estimated to generate would be expected to produce unusual traffic hazards or congestion, or cause or induce emissions which may be expected to interfere with the maintenance of air quality standards established by the United States Environmental Protection Agency, the New York State Department of Environmental Conservation or other regulatory agency having jurisdiction, due to the design or capacity of the state or highway system, the relationship of such proposed use to surrounding or nearby industrial, commercial or residential uses or other factors affecting air pollution arising from mobile source activity.

§ 220-69. Procedure.

A. In the case of any application for the establishment of a use subject to the performance standards, the Planning Board may require the applicant, at his own expense, to provide such evidence as it deems necessary to determine whether the proposed use will conform to said standards.

B. If the Planning Board deems it necessary, expert advice may be obtained, with the cost of such advice paid for in advance by the applicant as a condition of further consideration of his application. The report of any expert consultants shall be promptly furnished to the applicant.

C. During the course of site plan review, the Planning Board will determine if the applicant's proposal will conform to the performance standards.

§ 220-70. Enforcement.

A. If, in the judgment of the Building Inspector or of the Town Board, there is a violation of the performance standards, the Building Inspector shall give written notice, by registered or certified mail, to the owner and tenants of the property upon which the alleged violation occurs, describing the particulars of the alleged violation and the reasons why it is believed that there is a violation in fact, and shall require an answer or correction of the alleged violation to the satisfaction of the Building Inspector within a reasonable time limit set by said Inspector. The notice shall state and it is hereby declared that failure to reply or to correct the alleged violation to the satisfaction of the Building Inspector within the time limit constitutes admission of a violation of this chapter. The notice shall further state that, upon request of those to whom it is directed, technical determinations of the nature and extent of the violation as alleged will be made and that, if violation as alleged is found, costs of the determinations will be charged against those responsible, in addition to such other penalties as may be appropriate and that, if it is determined that no violation exists, costs of determination will be borne by the Town.

B. If, with the time limit set, there is no reply, but the alleged violation is corrected to the satisfaction of the Building Inspector, he shall note "violation corrected" on his copy of the notice and shall retain it among his records.

C. If there is no reply within the time limit set (thus establishing admission of a violation of this chapter) and the alleged violation is not corrected to the satisfaction of the Building Inspector within the time limit set, he shall proceed to take action in accordance with Article **IX**, §§ **220-71** through **220-73**, of this chapter.

KELLARD SESSIONS
CONSULTING, P.C.

John Kellard, P.E.
David Sessions, RLA, AICP

MEMORANDUM

TO: Chairman Jerome Kerner, AIA and
Members of Lewisboro Planning Board

CC: Ciorsdan Conran
Judson Siebert, Esq.

FROM: Jan K. Johannessen, AICP
Joseph M. Cermele, P.E., CFM
David J. Sessions, RLA, AICP
Town Consulting Professionals

DATE: December 14, 2016

RE: Site Development Plan Approval
Verizon Wireless – Leon Levy Upgrade
NYS Route 35
Sheet 40, Block 10263, Lots 1 and 62

Project Description

The subject property consists of ±4.0 acres of land and is located within the R-4A Zoning District. The site is landlocked (surrounded by lands known as the Leon Levy Preserve) and is accessed from NYS Route 35. The subject property is developed with a telecommunication facility consisting of a ±125-foot tall lattice tower, a ±75' x 35' equipment building, and a ±2,900 s.f. fenced equipment compound area. The applicant, New York SMSA Limited Partnership d/b/a Verizon Wireless, has submitted a Special Use Permit application to replace nine (9) existing panel antennas with six (6) panel antennas and install ancillary equipment, including 12 Remote Radio Head (RRH) units and a total of six (6) Main Distribution Boxes (MDBs), three (3) of which will be located within Verizon's equipment room. The proposed action also includes removing 12 out of 18 coax cables and installing three (3) hybriflex cables.

SEQRA

The proposed action is an Unlisted Action under the State Environmental Quality Review Act (SEQRA). Prior to approval, the Planning Board must issue a Determination of Significance.

Required Approvals/Referrals

1. Special Use Permit is required from the Planning Board.

2. A public hearing is required to be held on the Special Use Permit.

3. A "notification only" referral should be made to the Westchester County Planning Board in accordance with Section 239-m of the General Municipal Law; the Planning Board Secretary will coordinate this referral.

Plan Comments

1. Via resolution dated October 20, 2015, the Planning Board granted the applicant a Special Use Permit and Renewal. This application included the replacement of three (3) existing panel antennas with a total of nine (9) panel antennas. The site plan was signed on December 17, 2015 and the applicant has confirmed that this work was completed in April, 2016.

2. A detail of the existing and proposed panel antennas should be included on the site plan; dimensions shall be provided.

3. The Planning Board's October 20, 2015 Resolution included a 5-year renewal of the Special Use Permit, expiring on October 20, 2020. As the Special Use Permit is still valid and will not expire for approximately 4 years, the Planning Board should determine if an additional extension is necessary at this time.

4. The previously approved application, referenced above, required a height variance from the Zoning Board of Appeals, which was issued on October 28, 2015 (signed and filed on November 13, 2015). A determination must be made as to whether the proposed action would fall under this previously granted variance or whether the variance requires an amendment. We note that the maximum proposed antenna height appears to remain the same (138'-3").

5. We note that the prior application was referred to and approved by the Architecture and Community Appearance Review Council (ACARC) on November 12, 2015; given the nature of the proposed project and its similarity to the prior approval, a determination should be made as to whether the proposed action should be referred to the ACARC.

6. If not done so already, the application should be referred to the Antenna Advisory Board (AAB).

Plans Reviewed, prepared by Structural Consulting Services and dated September 29, 2016:

- Location Plan, Compound Plan, Project Information, Topographic Map and Notes (C-1)
- Site Elevation, Antenna & Cable Schedule, Cable Diagram and Notes (C-2)

Documents Reviewed:

- Letter, prepared by Snyder & Snyder, LLP, dated November 17, 2016
- Planning Board Application
- Memorandum in Support of the Application, dated November 17, 2016
- Structural Analysis Report, prepared by Structural Consulting Services, dated November 7, 2016
- FCC Licenses, dated July 23, 2007
- RF Compliance Report, prepared by Pinnacle Telecom Group, dated June 30, 2016
- Short Environmental Assessment Form, dated November 7, 2016

JKJ/JMC/DJS/dc

T:\Lewisboro\Correspondence\LW2098JJ-LWPB-VerizonLeonLevyUpgrade-Review-Memo-12-14-16.docx

LAW OFFICES OF
SNYDER & SNYDER, LLP
94 WHITE PLAINS ROAD
TARRYTOWN, NEW YORK 10591
(914) 333-0700
FAX (914) 333-0743

NEW YORK OFFICE
445 PARK AVENUE, 9TH FLOOR
NEW YORK, NEW YORK 10022
(212) 749-1448
FAX (212) 932-2693

LESLIE J. SNYDER
ROBERT D. GAUDIOSO

DAVID L. SNYDER
(1956-2012)

WRITER'S E-MAIL ADDRESS

Lsnyder@snyderlaw.net

NEW JERSEY OFFICE
ONE GATEWAY CENTER, SUITE 2600
NEWARK, NEW JERSEY 07102
(973) 824-9772
FAX (973) 824-9774

REPLY TO:

Tarrytown Office

November 17, 2016

Hon. Chairman Jerome Kerner
and Members of the Planning Board
Town of Lewisboro
20 North Salem Road
Cross River, New York 10590

RE: New York SMSA Limited Partnership d/b/a Verizon Wireless
Request for Special Permit Amendment for Antenna Work
on the Existing Tower located at
Route 35, Lewisboro, New York

Dear Hon. Chairman Kerner and Members of the Planning Board:

I am the attorney for New York SMSA Limited Partnership d/b/a Verizon Wireless ("Verizon Wireless") in connection with its request for a special permit amendment and renewal with respect to antenna work ("Antenna Work") on the existing communications tower ("Existing Tower") at the captioned site. Verizon Wireless' Antenna Work consists of replacing antennas, together with the installation of ancillary equipment on the Existing Tower, as indicated on the plans submitted herewith. The Antenna Work is necessary for Verizon Wireless to be able to provide enhanced voice and data services to the area, allowing for high speed wireless data transmission. In accordance with Section 220-41.1(H) of the Town Code, alteration of an approved communications facility requires special permit approval.

In connection therewith, I have enclosed the required special permit application fee and 9 copies, together with one electronic copy, of the following materials:

1. Special permit application;

2. Signed and sealed plans prepared by APT Engineering, depicting the proposed work; and

3. Memorandum in Support of the Application with Exhibits, including a radio frequency emissions compliance report and a structural certification.

Section 220-41.1 C (2) of the Town of Lewisboro's Zoning Code specifically encourages the collocation of antennas on existing towers like the instant case, and provides in Section 220-41.1(H)(2), that applications involving amending an approved communications facility in connection with co-location shall be processed in an expedited manner.

Moreover, it is respectfully submitted that the Facility should be approved forthwith in accordance with federal law. The Middle Class Tax Relief and Job Creation Act of 2012 ("TRA"), enacted on February 22, 2012, specifically acknowledges the importance of wireless communications infrastructure and contains a provision fostering the deployment of wireless communication facilities and modifications thereto. Section 6409 of the TRA provides that a local government "may not deny, and shall approve" an application for "collocation of new transmission equipment" or "replacement of transmission equipment" on an existing wireless tower or base station that does not "substantially change the physical dimensions of such tower or base station." Furthermore, the Federal Communications Commission adopted rules ("FCC Rules") implementing Section 6409 of the Tax Relief Act. See Title 47 C.F.R Section 1.40001. Under the FCC Rules, if a wireless facility is an eligible facilities request ("E.F.R."), review is limited in scope and the facility must be approved within 60 days of the filing the application. *The proposed Antenna Work is an E.F.R. pursuant to the TRA and FCC Rules, since it involves the collocation of transmission equipment that does not constitute a "substantial change."* In connection therewith, it is respectfully submitted that Verizon Wireless' request for the Antenna Work shall be approved forthwith so that the special permit is amended to permit such Antenna Work and the special permit shall continue for another five (5) years from the date of special permit amendment.

Thank you for your consideration. I look forward to discussing this matter with the Planning Board at your next meeting. If you have any questions or require additional documentation, please do not hesitate to call me or Michael Sheridan of my office at (914) 333-0700.

Respectfully submitted,

Leslie J. Snyder

LJS/jg
cc: Verizon Wireless
Z:\SSDATA\WPDATA\SS4\WP\NEWBANM\Joe Rollins\LTE Zoning Analyses\South Salem (Lewisboro) 4\ANTMO\Planning\PB Ltr.FIN.docx

TOWN OF LEWISBORO PLANNING BOARD

PO Box 725, 20 North Salem Road, Cross River, NY 10518 Email: planning@lewisborogov.com Tel: (914) 763-5592

Site Development Plan/Subdivision Plat Application – Check all that apply:

Waiver of Site Development Plan Procedures	☐		
Site Development Plan Approval	Step I ☐	Step II ☐	
Special Use Permit Approval	Step I ☐	Step II ☐	
Subdivision Plat Approval	Step I ☐	Step II ☐	Step III ☐

Project Information

Project Name: Antenna replacement and related improvements

Project Address: Route 35, South Salem, New York

Gross Parcel Area: _____ Zoning District: R-4A Sheet(s): 40 Block (s): 10263 Lot(s): 1, 62

Project Description: Antenna replacement and related improvements per plans.

Is the site located within 500 feet of any Town boundary?	YES ☐	NO ☑
Is the site located within the New York City Watershed?	YES ☐	NO ☑
Is the site located on a State or County Highway?	YES ☑	NO ☐

Does the proposed action require any other permits/approvals from other agencies/departments?

Town Board	☐	ZBA	☐	Building Dept.	☑	Town Highway	☐
ACARC	☐	NYSDEC	☐	NYCDEP	☐	WCDH	☐
NYSDOT	☐	Town Wetland	☐	Town Stormwater	☐		

Other _____

Owner's Information

Name: American Tower Email: _____

Address: 10 Presidential Way, Woburn, MA Phone: _____

Applicant's Information (if different)

Name: New York SMSA Limited Partnership d/b/a Verizon Wireless Email: lsnyder@snyderlaw.net

Address: c/o Snyder & Snyder, LLP, 94 White Plains Road, Tarrytown, New York 10591 Phone: 914-333-0700

Authorized Agent's Information

Name: Leslie J. Snyder, Esq. Email: lsnyder@snyderlaw.net

Address: Snyder & Snyder, LLP, 94 White Plains Road, Tarrytown, New York 10591 Phone: 914-333-0700

THE APPLICANT understands that any application is considered complete only when all information and documents required have been submitted and received by the Planning Board. The applicant further understands that the applicant is responsible for the payment of all application and review fees incurred by the Planning Board.

THE UNDERSIGNED WARRANTS the truth of all statements contained herein and in all supporting documents according to the best of his/her knowledge and belief, and authorizes visitation and inspection of the subject property by the Town of Lewisboro and its agents.

APPLICANT'S SIGNATURE New York SMSA Limited Partnership d/b/a Verizon Wireless By: _____ DATE 11/11, 2016

OWNER'S SIBNATURE See attached letter of authorization DATE _____

TOWN OF LEWISBORO PLANNING BOARD

PO Box 725, 20 North Salem Road, Cross River, NY 10518
Email: planning@lewisborogov.com
Tel: (914) 763-5592 Fax: (914) 763-3637

Tax Payment Affidavit Requirement

This form must accompany all applications to the Planning Board.

Under regulations adopted by the Town of Lewisboro, the Planning Board may not accept any application unless an affidavit from the Town of Lewisboro Receiver of Taxes is on file in the Planning Board office. The affidavit must show that all amounts due to the Town of Lewisboro as real estate taxes and special assessments on the total area encompassed by the application, together with all penalties and interest thereon, have been paid.

Under New York State law, the Westchester County Clerk may not accept any subdivision map for filing unless the same type of affidavit from the Town of Lewisboro Receiver of Taxes is submitted by the applicant at the time of filing.

This form must be completed by the applicant and must accompany all applications to the Planning Board. Upon receipt, the Planning Board Secretary will send the form to the Receiver of Taxes for signature and notarization. If preferred, the applicant may directly obtain the signature of the Receiver of Taxes and notarization prior to submission.

To Be Completed by Applicant
(Please type or print)

New York SMSA Limited Partnership
d/b/a Verizon Wireless
Name of Applicant

Antenna work and related improvements
Project Name

Property Description

Tax Block(s): 10263

Tax Lot(s): 1 & 62

Tax Sheet(s): 40

Property Assessed to:

American Towers LLC
Name

10 Presidential Way
Address

Woburn | MA | 01801
City | *State* | *Zip*

The undersigned, being duly sworn deposes and says that a search of the tax records in the office of the Receiver of Taxes, Town of Lewisboro, reveals that all amounts due to the Town of Lewisboro as real estate taxes and special assessments, together with all penalties and interest thereon, affecting the premises described below, have been paid.

Signature - Receiver of Taxes: _____
Date

Sworn to before me this

_____ **day of** _____, 2_____

_____
Signature - Notary Public (affix stamp)

AMERICAN TOWER®
CORPORATION

LETTER OF AUTHORIZATION

ATC SITE # / NAME: 88166 / South Salem NY
SITE ADDRESS: Route 35, South Salem, NY
LICENSEE: New York SMSA Limited Partnership d/b/a Verizon Wireless

I, Margaret Robinson, Senior Counsel for American Tower*, owner of the tower facility located at the address identified above (the "Tower Facility"), do hereby authorize New York SMSA Limited Partnership d/b/a Verizon Wireless, its successors and assigns, and/or its agent, (collectively, the "Licensee") to act as American Tower's non-exclusive agent for the sole purpose of filing and consummating any land-use or building permit application(s) as may be required by the applicable permitting authorities for Licensee's telecommunications' installation.

We understand that this application may be denied, modified or approved with conditions. The above authorization is limited to the acceptance by Licensee only of conditions related to Licensee's installation and any such conditions of approval or modifications will be Licensee's sole responsibility.

Signature:

Print Name: Margaret Robinson
Senior Counsel
American Tower*

NOTARY BLOCK

Commonwealth of MASSACHUSETTS
County of Middlesex

This instrument was acknowledged before me by Margaret Robinson, Senior Counsel for American Tower*, personally known to me (or proved to me on the basis of satisfactory evidence) to be the person whose name is subscribed to the within instrument and acknowledged to me that he executed the same.

WITNESS my hand and official seal, this 13 day of May, 2016.

NOTARY SEAL

ANGELICA R. LEMOS-BARTHELEMY
Notary Public
COMMONWEALTH OF MASSACHUSETTS
My Commission Expires
April 10, 2020

Notary Public
My Commission Expires: April 10, 2020

*American Tower includes all affiliates and subsidiaries of American Tower Corporation.

PLANNING BOARD
TOWN OF LEWISBORO

----------X

In the matter of the Application of

NEW YORK SMSA LIMITED PARTNERSHIP
d/b/a VERIZON WIRELESS

Premises: NYS Route 35
Town of Lewisboro, New York
Section 40, Block 10263, Lot 1 & 62

----------X

MEMORANDUM IN SUPPORT OF THE APPLICATION BY NEW YORK SMSA LIMITED PARTNERSHIP d/b/a VERIZON WIRELESS FOR ANTENNA WORK ON THE EXISTING PUBLIC UTILITY WIRELESS COMMUNICATIONS FACILITY

I. Introduction

New York SMSA Limited Partnership d/b/a Verizon Wireless ("Verizon Wireless") respectfully submits this memorandum in support of its application to amend its special permit to perform antenna work ("Antenna Work") in connection with its existing public utility wireless communications facility ("Facility") at the property ("Property") located on NYS Route 35, Town of Lewisboro, New York. The Antenna Work consists of replacing antennas, together with the installation of ancillary equipment on the existing tower ("Existing Tower") to improve Verizon Wireless' wireless services to the area. In connection therewith, we request that the Board also grant a renewal of the existing special permit for an additional five (5) years from the time of the special permit amendment.

II. Statement of Facts

The Property is located in the R-4A zoning district in the Town of Lewisboro ("Town") and is currently used for public utility wireless communications purposes. Verizon Wireless' proposed Antenna Work will enable it to provide enhanced wireless communication services to the area. The proposed Antenna Work is detailed in the site plan ("Site Plan") prepared by Structural Consulting Services, P.C. ("SCS") and submitted herewith.

III. Public Utility Status

Verizon Wireless is licensed by the Federal Communications Commission ("FCC"), and is a wireless telecommunication public utility in the State of New York, providing an essential public service. See Cellular One v. Rosenberg, 82 N.Y.2d 364 (1993) (hereinafter referred to as "Rosenberg"). In Rosenberg, supra, New York's highest court held that federally licensed wireless carriers are public utilities in the State of New York, and provide an essential public service. The court found that public utilities, such as Verizon Wireless, are entitled to a relaxed standard in zoning

decisions, since the proposed use is necessary for it to render safe and adequate service.

The instant application is filed in furtherance of the goals and objectives established by Congress under the federal Telecommunications Act of 1996. The federal Telecommunications Act of 1996 is "an unusually important legislative enactment," establishing national public policy in favor of encouraging "*rapid deployment of new telecommunications technologies* (emphasis supplied)." Reno v. ACLU, 521 U.S. 844, 857, 117 S.Ct. 2329, 2337-38, 138 L.Ed.2d 874 (1997). In fact, in 1999, Congress expanded further upon this policy by enacting the Wireless Communications and Public Safety Act of 1999, Pub.L. 106-81, 113 Stat. 1286 (the "911 Act"). The "911 Act," empowered the FCC to develop regulations to make wireless 911 services available to all Americans. The express purpose of the Act, as articulated by Congress, was "*to encourage and facilitate the prompt deployment throughout the United States of seamless, ubiquitous, and reliable end-to-end infrastructure for communications, including wireless communications, to meet the Nation's public safety and other communications needs.*" (emphasis added). Furthermore, under 220-41.1.H(2) of the Town's Zoning Code, a collocation, like the one proposed here, on an approved communication tower, which is consistent with the structural, safety and visual aspects of the approved tower, "shall be processed in an expedited manner."

Moreover, it is respectfully submitted that the Facility should be approved forthwith in accordance with federal law. The Middle Class Tax Relief and Job Creation Act of 2012 ("TRA"), enacted on February 22, 2012, specifically acknowledges the importance of wireless communications infrastructure and contains a provision fostering the deployment of wireless communication facilities. Section 6409 of the TRA provides that a local government "may not deny, and shall approve" an application for "collocation of new transmission equipment" or "replacement of transmission equipment" on an existing wireless tower or base station that does not "substantially change the physical dimensions of such tower or base station." Furthermore, the Federal Communications Commission adopted rules ("FCC Rules") implementing Section 6409 of the Tax Relief Act. See Title 47 C.F.R Section 1.40001. Under the FCC Rules, if a wireless facility is an eligible facilities request ("E.F.R."), review is limited in scope and the facility must be approved within 60 days of the filing the application. *The proposed Antenna Work is an E.F.R. pursuant to the TRA and FCC Order, since it involves the collocation of transmission equipment that does not constitute a "substantial change." Accordingly, the Antenna Work as proposed on the Existing Tower should be approved forthwith.*

IV. Verizon Wireless' Facility Meets the Standards for a Special Permit

A special permit use is permitted as of right when the applicant has demonstrated compliance with the applicable standards. See Matter of North Shore Steak House v. Board of Appeals of Inc. Vil. of Thomaston, 30 N.Y.2d 238, 331 N.Y.S. 2d 645 (1972). As detailed herein, Verizon Wireless' facility, as modified by the Antenna Work, will continue to meet the special permit criteria set forth in Section 220-41.1 of the Town Zoning Code ("Zoning Code").

A. Structural Compliance §220.41.1B(1),(2),(3),(4): Pursuant to the Structural Analysis Report from SCS attached hereto as Exhibit 1, the Existing Tower can accommodate Verizon Wireless' Antenna Work.

B. FCC and FAA Regulations §220.41.1B(5),(6),(9): Verizon Wireless will continue to operate and maintain its existing facility in accordance with its licenses from the Federal Communications Commission ("FCC"), which are attached hereto as Exhibit 2. Verizon Wireless' facility will remain in conformance with all applicable rules and regulations of those governmental agencies having jurisdiction over communications facilities, including the FCC and FAA. Attached hereto as Exhibit 3 is an RF compliance Report ("RF Compliance Report") issued by Pinnacle Telecom Group, which indicates that Verizon Wireless' facility, taking into account all existing and/or proposed antennas, will continue to conform with the applicable regulations promulgated by the FCC pertaining to radio frequency emissions.

C. Need for Facility §220.41.1B(7): The proposed Antenna Work is necessary for Verizon Wireless to enhance its wireless services and meet current and expected demands for Verizon Wireless' services in the surrounding area. Due to the nature of Verizon Wireless' Antenna Work, Verizon Wireless respectfully requests that this Honorable Board waive its requirement under the Zoning Code to provide a verifiable list of complaints provided to the Public Service Commission for interruptions of service in the area. Such waiver is permitted under §220.41.1H(3) of the Zoning Code. Moreover, pursuant to the FCC Rules, the Facility is an E.F.R. so that a local government may only request documentation "reasonably related to determining" if the request is an E.F.R., but "may not require the applicant to submit any other documentation, including but not limited to documentation intended to illustrate need for such wireless facilities." Since the Facility is an E.F.R., any requirement to demonstrate need is federally preempted.

D. Facility Siting §220.41.1B(8), C (1) (2), D (2), (3), (4) & (9): Due to the nature of Verizon Wireless' Antenna Work, Verizon Wireless respectfully requests that this Honorable Board waive the requirements of §220.41.1 relating to review of other properties and need for the site, including, without limitation §220.41.1 B (8) C(1), (2); and D (2), (3), (4) & (9). Such waivers are permitted under §220.41.1H(3) of the Zoning Code. Moreover, due to the fact that Verizon Wireless' Facility is an E.F.R. collocated on the Existing Tower as encouraged by the Wireless Law and the TRA, it is respectfully submitted that an alternatives analysis is not applicable and is federally preempted by the FCC Rules.

E. Location of Antennas §220-41.1C(3); D(6): In accordance with the requirements of Sections 220-41(C)(3) and (D)(6) of the Zoning Code, the Structural Analysis Report from SCS, attached hereto as Exhibit 1, confirms that the Existing Tower has sufficient capacity for Verizon Wireless' Antenna Work.

F. Environmental Assessment Form §220-41.1D(1): It is respectfully submitted that the proposed action is a Type II action under the New York State Environmental Quality Review Act ("SEQRA") 6 NYCRR 617.5(C)(1), (2) and/or (7), and, therefore, no environmental review under SEQRA is required. In any event, attached hereto as Exhibit 4 is a short Environmental Assessment Form ("EAF"). Due to the fact that Verizon Wireless' Antenna Work consists of the replacement/collocation of equipment on an Existing Tower as encouraged by the Zoning Code, Verizon Wireless respectfully requests that this Honorable Board waive the requirement for a long EAF and any remaining requirements of §220.41.1D(1).

G. Site Plan §220-41.1D(5): Submitted herewith is a Site Plan, which includes the elevations and locations of the Antenna Work. Kindly note that the RF Compliance Report, attached hereto as Exhibit 3, indicates the type of antennas to be installed. There will be no lighting or signage associated with the Antenna Work.

H. Structural Certification, and Emissions Safety and Compliance Report and Certification §220-41.1 D(6); (7): As noted above, the Structural Analysis Report, attached hereto as Exhibit 1, demonstrates that the Existing Tower can accommodate the Antenna Work. The RF Compliance Report, attached hereto as Exhibit 3, certifies that the RF levels from all existing and proposed antennas will be "in clear compliance with the FCC regulations and limit concerning RF safety." As you are aware, RF interference is governed by the FCC and is therefore not a matter for local determination. See New York SMSA Limited Partnership d/b/a Verizon Wireless v. Town of Clarkstown, 2009 WL 782971 (S.D.N.Y., 2009). In any event, as noted in the RF Compliance Report, Verizon Wireless operates pursuant to its licenses from the FCC and in connection therewith, Verizon Wireless' installation will not interfere with the existing equipment of other federally licensed communications providers. Due to the nature of the Antenna Work, Verizon Wireless respectfully requests that this Honorable Board waive any remaining requirements of §220.41.1D(6) and (7). Such waiver is permitted under §220.41.1H(3) of the Zoning Code.

I. Site Access Driveway § 220-41.1D(8): Verizon Wireless will continue to utilize the existing driveway to access its wireless communications facility. Therefore, no new site access driveways are proposed.

J. Inapplicable Provisions § 206-41.1E: It is respectfully submitted that Section 206-41.1E of the Zoning Code is inapplicable to the instant application since those sections apply to the construction of communications tower and the instant application involves the Antenna Work on the Existing Tower.

In addition to the specific special permit criteria indicated above, Verizon Wireless' facility, as modified by the Antenna Work, will continue to meet the general special permit criteria as follows in accordance with § 220-32 of the Zoning Code:

A. Nature of the Proposal: The location and size of the project, the nature and intensity of the operations, and the size and location of the Property are such that Verizon Wireless' facility will continue to be in harmony with the appropriate and orderly development of the area for the following reasons. First, the proposed use is specifically authorized by special permit in accordance with the Zoning Code, and the Property is already utilized for the Existing Tower with facilities for Verizon Wireless. Second, since the Antenna Work involves the use of an Existing Tower, it eliminates Verizon Wireless' need for an additional tower in the area. Third, the wireless communications facility will remain unmanned; requiring infrequent maintenance visits of approximately once a month so there will be no detrimental effect on the neighborhood due to traffic or other environmental impacts.

B. Appropriate Development of the Neighborhood: The location, nature and height of

the project are such that the special permit will not hinder or discourage the appropriate development and use of adjacent land and buildings. Since the Antenna Work merely involves the use of the Existing Tower and involves no ground disturbance, there will be no additional disturbance to the area that would affect other development.

C. Nature of the Operations: The proposed Antenna Work will not produce noise, smoke, gas, heat, odor, dust, fumes, vibrations or flashing lights onto nearby properties, nor will it attract insects, vermin or vectors. In addition, the wireless communications facility will remain unmanned and not require water supply, waste disposal or other municipal resources.

D. Parking: Verizon Wireless' Antenna Work has no impact on pedestrian or vehicular traffic, since Verizon Wireless' facility will continue to be unmanned requiring infrequent maintenance visits of approximately once per month.

V. Conclusion

By granting Verizon Wireless an amended special permit for the Antenna Work, the Planning Board will enable Verizon Wireless to improve its wireless service to the area, affording Verizon Wireless users in the area the ability to have enhanced voice and high speed data transmission, in accordance with the Zoning Code and the T.R.A., such that it will have no significant adverse effect on the area and should be approved forthwith.

WHEREFORE, for all of the foregoing reasons, Verizon Wireless respectfully prays that this Honorable Board deem the proposed action a Type II Action[3] or issue a negative declaration pursuant to the New York State Environmental Quality Review Act and grant the requested special permit approval for the Antenna Work so that the special permit, as amended, will continue for an additional five (5) years from the date of the special permit amendment.

Dated: November 17, 2016
Tarrytown, New York

Respectfully submitted,
Leslie J. Snyder
SNYDER & SNYDER, LLP
94 White Plains Road
Tarrytown, NY 10591

Z:\SSDATA\WPDATA\SS4\WP\NEWBANM\Joe Rollins\LTE Zoning Analyses\South Salem (Lewisboro) 4\ANTMO\Planning\PB Memo.FIN.doc

[3] It should be noted that the proposal is a Type II action, thereby deemed not to have any significant environmental effect, since it involves the maintenance, replacement and/or expansion of a non-residential facility involving less than 4,000 square feet.

EXHIBIT 1
Structural Analysis Report

STRUCTURAL CONSULTING SERVICES, P.C.

November 7, 2016

Hon. Chairman Kerner
And Members of the Planning Board
Town of Lewisboro
20 North Salem Road
Cross River, NY 10518

RE: New York SMSA Limited Partnership d/b/a Verizon Wireless
Site: South Salem
NYS Route 35, South Salem, NY 10590
Tax Block: 10263, Tax Lots: 1 & 62
Antenna Modifications

Dear Hon. Chairman Kerner and Members of the Planning Board:

New York SMSA Limited Partnership d/b/a Verizon Wireless is proposing to replace six (6) of its nine (9) existing panel antennas with like kind panel antennas, remove the remaining three (3) existing panel antennas and install twelve (12) RRH units, and three (3) Main Distribution Boxes MDBs on the existing 125'+/- self-supporting lattice at the above referenced site as shown on the construction drawings prepared by our office, drawings C-1 & C-2, dated 6/29/16.

Our office has reviewed a copy of the structural analysis report prepared by American Tower Engineering Services, Cary, NC, Eng. Number OAA685418_C3_06, dated 10/21/16, for the existing tower under the proposed and existing antenna loadings which deemed the existing tower and foundation to have sufficient capacity. In our professional opinion, the existing tower and foundation can accommodate the proposed antenna modifications. Should you have any questions, please do not hesitate to contact our office.

Sincerely,

Structural Consulting Services, P.C.

James H. Fahey, P.E., S.E.
Principal

STATE OF NEW YORK
JAMES H. FAHEY
078939
LICENSED PROFESSIONAL ENGINEER

cc: Verizon Wireless
Snyder & Snyder
JHF/kh

67 Federal Road, Brookfield, CT 06804
Tel: 203.740.7578 Fax: 203.775.5670

EXHIBIT 2
FCC Licenses

Federal Communications Commission
Wireless Telecommunications Bureau

Radio Station Authorization (Reference Copy Only)

This is not an official FCC license. It is a record of public information contained in the FCC's licensing database on the date that this reference copy was generated. In cases where FCC rules require the presentation, posting, or display of an FCC license, this document may not be used in place of an official FCC license.

Licensee: Cellco Partnership

ATTN Regulatory
Cellco Partnership
1120 Sanctuary Pkwy, #150 GASA5REG
Alpharetta, GA 30004

FCC Registration Number (FRN): 0003290673	
Call Sign: KNLH264	File Number: 0003047719
Radio Service: CW - PCS Broadband	

Grant Date	Effective Date	Expiration Date	Print Date
07/23/2007	07/23/2007	06/27/2017	07/26/2007

Market Number: BTA321	Channel Block: F	Sub-Market Designator: 0
Market Name: New York, NY		

1st Build-out Date	2nd Build-out Date	3rd Build-out Date	4th Build-out Date
06/27/2002			

Special Conditions or Waivers/Conditions This authorization is subject to the condition that, in the event that systems using the same frequencies as granted herein are authorized in an adjacent foreign territory (Canada/United States), future coordination of any base station transmitters within 72 km (45 miles) of the United States/Canada border shall be required to eliminate any harmful interference to operations in the adjacent foreign territory and to ensure continuance of equal access to the frequencies by both countries.

This authorization is conditioned upon the full and timely payment of all monies due pursuant to Sections 1.2110 and 24.716 of the Commission's Rules and the terms of the Commission's installment plan as set forth in the Note and Security Agreement executed by the licensee. Failure to comply with this condition will result in the automatic cancellation of this authorization.

Conditions

Pursuant to Section 309(h) of the Communications Act of 1934, as amended, 47 U.S.C. Section 309(h), this license is subject to the following conditions: This license shall not vest in the licensee any right to operate the station nor any right in the use of the frequencies designated in the license beyond the term thereof nor in any other manner than authorized herein. Neither the license nor the right granted thereunder shall be assigned or otherwise transferred in violation of the Communications Act of 1934, as amended. See 47 U.S.C. Section 310(d). This license is subject in terms to the right of use or control conferred by Section 706 of the Communications Act of 1934, as amended. See 47 U.S.C. Section 606.

To view the geographic areas associated with the license, go to the Universal Licensing System (ULS) homepage at http://wireless.fcc.gov/uls/ and select "License Search". Follow the instruction on how to search for license information

FCC 601 - MB
September 2002

Federal Communications Commission
Wireless Telecommunications Bureau

RADIO STATION AUTHORIZATION

LICENSEE: CELLCO PARTNERSHIP

ATTN: REGULATORY
CELLCO PARTNERSHIP
1120 SANCTUARY PKWY, #150 GASA5REG
ALPHARETTA, GA 30009-7630
ANNED

Call Sign	File Number
WQBT539	0003864879
Radio Service	
CW - PCS Broadband	

FCC Registration Number (FRN): 0003290673

Grant Date	Effective Date	Expiration Date	Print Date
02-28-2007	06-11-2009	01-03-2017	06-11-2009

Market Number	Channel Block	Sub-Market Designator
BTA321	C	4

Market Name
New York, NY

1st Build-Out Date	2nd Build-Out Date	3rd Build-Out Date	4th Build-Out Date
12-07-2003			

Waivers/Conditions:

This authorization is subject to the condition that, in the event that systems using the same frequencies as granted herein are authorized in an adjacent foreign territory (Canada/United States), future coordination of any base station transmitters within72 km (45 miles) of the United States/Canada border shall be required to eliminate any harmful interference to operations in the adjacent foreign territory and to ensure continuance of equal access to the frequencies by both countries.

This authorization is conditioned upon the full and timely payment of all monies due pursuant to Sections 1.2110 and 24.711 of the Commission's Rules and the terms of the Commission's installment plan as set forth in the Note and Security Agreement executed by the licensee. Failure to comply with this condition will result in the automatic cancellation of this authorization.

Conditions:
Pursuant to §309(h) of the Communications Act of 1934, as amended, 47 U.S.C. §309(h), this license is subject to the following conditions: This license shall not vest in the licensee any right to operate the station nor any right in the use of the frequencies designated in the license beyond the term thereof nor in any other manner than authorized herein. Neither the license nor the right granted thereunder shall be assigned or otherwise transferred in violation of the Communications Act of 1934, as amended. See 47 U.S.C. § 310(d). This license is subject in terms to the right of use or control conferred by §706 of the Communications Act of 1934, as amended. See 47 U.S.C. §606.

This license may not authorize operation throughout the entire geographic area or spectrum identified on the hardcopy version. To view the specific geographic area and spectrum authorized by this license, refer to the Spectrum and Market Area information under the Market Tab of the license record in the Universal Licensing System (ULS). To view the license record, go to the ULS homepage at http://wireless.fcc.gov/uls/index.htm?job=home and select "License Search". Follow the instructions on how to search for license information.

FCC 601-MB
April 2009

Federal Communications Commission
Wireless Telecommunications Bureau

RADIO STATION AUTHORIZATION

LICENSEE: VERIZON WIRELESS TELECOM INC.

ATTN: REGULATORY
VERIZON WIRELESS TELECOM INC.
1120 SANCTUARY PKWY #150 - GASA5REG
ALPHARETTA, GA 30004

SCANNED

Call Sign	File Number
KNLF644	0003298939
Radio Service	
CW - PCS Broadband	

FCC Registration Number (FRN): 0005798061

Grant Date	Effective Date	Expiration Date	Print Date
02-28-2007	01-23-2008	01-03-2017	01-24-2008

Market Number	Channel Block	Sub-Market Designator
BTA321	C	3

Market Name
New York, NY

1st Build-Out Date	2nd Build-Out Date	3rd Build-Out Date	4th Build-Out Date
12-07-2003	01-03-2007		

Waivers/Conditions:
This authorization is subject to the condition that, in the event that systems using the same frequencies as granted herein are authorized in an adjacent foreign territory (Canada/United States), future coordination of any base station transmitters within72 km (45 miles) of the United States/Canada border shall be required to eliminate any harmful interference to operations in the adjacent foreign territory and to ensure continuance of equal access to the frequencies by both countries.

Conditions:
Pursuant to §309(h) of the Communications Act of 1934, as amended, 47 U.S.C. §309(h), this license is subject to the following conditions: This license shall not vest in the licensee any right to operate the station nor any right in the use of the frequencies designated in the license beyond the term thereof nor in any other manner than authorized herein. Neither the license nor the right granted thereunder shall be assigned or otherwise transferred in violation of the Communications Act of 1934, as amended. See 47 U.S.C. § 310(d). This license is subject in terms to the right of use or control conferred by §706 of the Communications Act of 1934, as amended. See 47 U.S.C. §606.

To view the geographic areas associated with the license, go to the Universal Licensing System (ULS) homepage at http://wireless.fcc.gov/uls and select "License Search". Follow the instructions on how to search for license information.

FCC 601-MB
August 2007

Federal Communications Commission
Wireless Telecommunications Bureau

RADIO STATION AUTHORIZATION

LICENSEE: CELLCO PARTNERSHIP

ATTN: REGULATORY
CELLCO PARTNERSHIP
1120 SANCTUARY PKWY, #150 GASA5REG
ALPHARETTA, GA 30009-7630

SCANNED

Call Sign	File Number
WQJQ696	0003864907
Radio Service	
WY - 700 MHz Lower Band (Blocks A, B, E)	

FCC Registration Number (FRN): 0003290673

Grant Date	Effective Date	Expiration Date	Print Date
11-26-2008	06-11-2009	06-13-2019	06-11-2009

Market Number	Channel Block	Sub-Market Designator
BEA010	A	0

Market Name
New York-No. New Jer.-Long Isl

1st Build-Out Date	2nd Build-Out Date	3rd Build-Out Date	4th Build-Out Date
06-13-2013	06-13-2019		

Waivers/Conditions:

If the facilities authorized herein are used to provide broadcast operations, whether exclusively or in combination with other services, the licensee must seek renewal of the license either within eight years from the commencement of the broadcast serviceor within the term of the license had the broadcast service not been provided, whichever period is shorter in length. See 47 CFR §27.13(b).

Conditions:

Pursuant to §309(h) of the Communications Act of 1934, as amended, 47 U.S.C. §309(h), this license is subject to the following conditions: This license shall not vest in the licensee any right to operate the station nor any right in the use of the frequencies designated in the license beyond the term thereof nor in any other manner than authorized herein. Neither the license nor the right granted thereunder shall be assigned or otherwise transferred in violation of the Communications Act of 1934, as amended. See 47 U.S.C. § 310(d). This license is subject in terms to the right of use or control conferred by §706 of the Communications Act of 1934, as amended. See 47 U.S.C. §606.

This license may not authorize operation throughout the entire geographic area or spectrum identified on the hardcopy version. To view the specific geographic area and spectrum authorized by this license, refer to the Spectrum and Market Area information under the Market Tab of the license record in the Universal Licensing System (ULS). To view the license record, go to the ULS homepage at http://wireless.fcc.gov/uls/index.htm?job=home and select "License Search". Follow the instructions on how to search for license information.

FCC 601-MB
April 2009

REFERENCE COPY
This is not an official FCC license. It is a record of public information contained in the FCC's licensing database on the date that this reference copy was generated. In cases where FCC rules require the presentation, posting, or display of an FCC license, this document may not be used in place of an official FCC license.

Federal Communications Commission
Wireless Telecommunications Bureau

RADIO STATION AUTHORIZATION

LICENSEE: NEW YORK SMSA LIMITED PARTNERSHIP

ATTN: REGULATORY
NEW YORK SMSA LIMITED PARTNERSHIP
1120 SANCTUARY PKWY, STE 150
ALPHARETTA, GA 30009-7547

Call Sign	File Number
KNKA206	0006358273
Radio Service: CL - Cellular	
Market Numer: CMA001	Channel Block: B
Sub-Market Designator: 0	

FCC Registration Number (FRN): 0003473270

Market Name
New York, NY-NJ/Nassau-Suffolk

Grant Date	Effective Date	Expiration Date	Five Yr Build-Out Date	Print Date
09-03-2014	09-03-2014	10-01-2024		09-03-2014

Site Information

Location	Latitude	Longitude	Ground Elevation (meters)	Structure Hgt to Tip (meters)	Antenna Structure Registration No.
2	40-50-32.0 N	073-01-33.0 W	89.6	93.0	1043284

Address: ADIRONDACK DR 300 FT S OF MIDVALE
City: SELDEN County: SUFFOLK State: NY Construction Deadline:

Antenna: 4 Azimuth (from true north)	0	45	90	135	180	225	270	315
Antenna Height AAT (meters)	86.100	83.100	83.800	99.800	106.000	93.200	84.600	81.800
Transmitting ERP (watts)	33.190	240.400	576.810	458.170	182.570	10.600	1.210	1.660

Antenna: 5 Azimuth (from true north)	0	45	90	135	180	225	270	315
Antenna Height AAT (meters)	86.100	83.100	83.800	99.800	106.000	93.200	84.600	81.800
Transmitting ERP (watts)	0.110	0.100	0.150	1.780	9.770	10.880	8.510	1.350

Antenna: 6 Azimuth (from true north)	0	45	90	135	180	225	270	315
Antenna Height AAT (meters)	86.100	83.100	83.800	99.800	106.000	93.200	84.600	81.800
Transmitting ERP (watts)	[illegible]	[illegible]	[illegible]	[illegible]	[illegible]	[illegible]	[illegible]	[illegible]

Conditions:
Pursuant to §309(h) of the Communications Act of 1934, as amended, 47 U.S.C. §309(h), this license is subject to the following conditions: This license shall not vest in the licensee any right to operate the station nor any right in the use of the frequencies designated in the license beyond the term thereof nor in any other manner than authorized herein. Neither the license nor the right granted thereunder shall be assigned or otherwise transferred in violation of the Communications Act of 1934, as amended. See 47 U.S.C. § 310(d). This license is subject in terms to the right of use or control conferred by §706 of the Communications Act of 1934, as amended. See 47 U.S.C. §606.

Federal Communications Commission
Wireless Telecommunications Bureau

RADIO STATION AUTHORIZATION

LICENSEE: CELLCO PARTNERSHIP

ATTN: REGULATORY
CELLCO PARTNERSHIP
1120 SANCTUARY PKWY, #150 GASA5REG
ALPHARETTA, GA 30009-7630

SCANNED

Call Sign	File Number
WQJQ689	0003865021
Radio Service	
WU - 700 MHz Upper Band (Block C)	

FCC Registration Number (FRN): 0003290673

Grant Date	Effective Date	Expiration Date	Print Date
11-26-2008	06-11-2009	06-13-2019	06-11-2009

Market Number	Channel Block	Sub-Market Designator
REA001	C	0

Market Name
Northeast

1st Build-Out Date	2nd Build-Out Date	3rd Build-Out Date	4th Build-Out Date
06-13-2013	06-13-2019		

Waivers/Conditions:

If the facilities authorized herein are used to provide broadcast operations, whether exclusively or in combination with other services, the licensee must seek renewal of the license either within eight years from the commencement of the broadcast serviceor within the term of the license had the broadcast service not been provided, whichever period is shorter in length. See 47 CFR §27.13(b).

This authorization is conditioned upon compliance with section 27.16 of the Commission's rules

Conditions:

Pursuant to §309(h) of the Communications Act of 1934, as amended, 47 U.S.C. §309(h), this license is subject to the following conditions: This license shall not vest in the licensee any right to operate the station nor any right in the use of the frequencies designated in the license beyond the term thereof nor in any other manner than authorized herein. Neither the license nor the right granted thereunder shall be assigned or otherwise transferred in violation of the Communications Act of 1934, as amended. See 47 U.S.C. § 310(d). This license is subject in terms to the right of use or control conferred by §706 of the Communications Act of 1934, as amended. See 47 U.S.C. §606.

This license may not authorize operation throughout the entire geographic area or spectrum identified on the hardcopy version. To view the specific geographic area and spectrum authorized by this license, refer to the Spectrum and Market Area information under the Market Tab of the license record in the Universal Licensing System (ULS). To view the license record, go to the ULS homepage at http://wireless.fcc.gov/uls/index.htm?job=home and select "License Search". Follow the instructions on how to search for license information.

REFERENCE COPY
This is not an official FCC license. It is a record of public information contained in the FCC's licensing database on the date that this reference copy was generated. In cases where FCC rules require the presentation, posting, or display of an FCC license, this document may not be used in place of an official FCC license.

Federal Communications Commission

Wireless Telecommunications Bureau

RADIO STATION AUTHORIZATION

LICENSEE: CELLCO PARTNERSHIP

ATTN: REGULATORY
CELLCO PARTNERSHIP
1120 SANCTUARY PKWY 150 CSA5REG
ALPHARETTA, GA 30009-7630

Call Sign	File Number
WQGA715	0003833180
Radio Service AW - AWS, 1710-1755/2110-2155 MHz bands	

FCC Registration Number (FRN): 0003290673

Grant Date	Effective Date	Expiration Date	Print Date
11-29-2006	05-1[illegible]-09	11-29-2021	05-12-2009

Market Number	Channel Block	Sub-Market Designator
REA001	[illegible]	0

Market Name
Northeast

1st Build-out Date	2nd Build-out Date	3rd Build-out Date	4th Build-out Date

Waivers/Conditions:

This authorization is conditioned upon the licensee, prior to initiating operation from any base or fixed station, making reasonable efforts to coordinate frequency usage with known co-channel and adjacent channel incumbent federal users operating in the 1710-1755 MHz band whose facilities could be affected by the proposed operations. See, e.g., FCC and NTIA Coordination Procedures in the 1710-1755 MHz Band, Public Notice, FCC 06-50, WT Docket No. 02-353, rel. April 20, 2006.

AWS operations must not cause harmful interference across the Canadian or Mexican Border. The authority granted herein is subject to future international agreements with Canada or Mexico, as applicable.

Conditions:
Pursuant to §309(h) of the Communications Act of 1934, as amended, 47 U.S.C. §309(h), this license is subject to the following conditions: This license shall not vest in the licensee any right to operate the station nor any right in the use of the frequencies designated in the license beyond the term thereof nor in any other manner than authorized herein. Neither the license nor the right granted thereunder shall be assigned or otherwise transferred in violation of the Communications Act of 1934, as amended. See 47 U.S.C. § 310(d). This license is subject in terms to the right of use or control conferred by §706 of the Communications Act of 1934, as amended. See 47 U.S.C. §606.

This license may not authorize operation throughout the entire geographic area or spectrum identified on the initial version. To view the specific geographic area and spectrum authorized by this license, refer to the Spectrum and Market Area information under the Market Tab of the license record in the Universal Licensing System (ULS). To view the license record, go to the ULS homepage at http://wireless.fcc.gov/uls/index.htm?job=home and select "License Search". Follow the instructions on how to search for license information.

FCC 601-MB
April 2009

EXHIBIT 3
RF Compliance Report

PINNACLE TELECOM GROUP
Professional and Technical Services

ANTENNA SITE FCC RF COMPLIANCE ASSESSMENT AND REPORT

PREPARED FOR

NEW YORK SMSA LIMITED PARTNERSHIP d/b/a VERIZON WIRELESS

"SOUTH SALEM" SITE
N.Y.S. ROUTE 35
SOUTH SALEM, NY

JUNE 30, 2016

14 RIDGEDALE AVENUE - SUITE 260 • CEDAR KNOLLS, NJ 07927 • 973-451-1630

Contents

Introduction and Summary 3

Note on Non-Interference 5

Antenna and Transmission Data 5

Compliance Analysis 8

Compliance Conclusion 12

Certification 13

Appendix A. Background on the FCC MPE Limit

Appendix B. Summary of Expert Qualifications

Introduction and Summary

At the request of New York SMSA Limited Partnership d/b/a Verizon Wireless ("Verizon Wireless"), Pinnacle Telecom Group has performed an independent expert assessment of radiofrequency (RF) levels and related FCC compliance for the modification of an existing wireless base station antenna operation on a lattice tower on N.Y.S. Route 35 in South Salem, NY. Verizon Wireless refers to the site as "South Salem" and the antenna modifications are proposed so Verizon Wireless can effectively operate under its FCC-licensed frequencies, including 746 MHz, 850 MHz, 1900 MHz and 2100 MHz.

The FCC requires wireless system operators to perform an assessment of potential human exposure to radiofrequency (RF) fields emanating from all the transmitting antennas at a site whenever antenna operations are added or modified, and to ensure compliance with the Maximum Permissible Exposure (MPE) limit in the FCC regulations. In this case, the tower supports other existing wireless antenna operations by AT&T, Sprint, and T-Mobile – the RF effects of which will be conservatively included in this compliance assessment.

This report describes a mathematical analysis of compliance with the FCC MPE limit for safe continuous exposure of the general public. The RF effects of the antennas are calculated using a standard FCC formula – and the analysis is designed to conservatively overstate the RF levels that actually occur from the antennas. In that way, as long as the results indicate RF levels below the MPE limit, we can have great confidence the compliance requirement is satisfied.

The results of a compliance assessment can be explained in layman's terms by describing the calculated RF levels as simple percentages of the FCC MPE limit. If the reference for that limit is 100 percent, then calculated RF levels higher than 100 percent indicate the MPE limit is exceeded, while calculated RF levels consistently lower than 100 percent serve as a clear and sufficient demonstration of compliance with the MPE limit. We will also describe the overall worst-case calculated result via the "plain-English" equivalent "times-below-the-limit factor".

The result of the FCC RF compliance assessment in this case is as follows:

- The conservatively calculated maximum RF level from the combination of the Verizon Wireless antenna operations, as proposed to be modified, along with the other antenna operations at the site, is 1.7640 percent of the FCC general population MPE limit – well below the 100-percent reference for compliance. In other words, even with the significant degree of conservatism incorporated in the analysis, the worst-case calculated RF level is still more than 55 times below the FCC limit established as safe for continuous human exposure to the RF emissions from antennas.
- The results of the calculations provide a clear demonstration that the RF levels from the combination of proposed and existing antenna operations at the site satisfy the applicable criteria for controlling potential human exposure to RF fields, and the RF levels will be in clear compliance with the FCC regulations and limit concerning RF safety. Moreover, because of the conservative methodology and incorporated assumptions, RF levels actually caused by the antennas will be even less significant than the calculation results here indicate.

The remainder of this report provides the following:

- relevant technical data on the Verizon Wireless antenna operations, as proposed to be modified, along with data on the other existing antenna operations at the site;
- a description of the applicable FCC mathematical model for assessing MPE compliance, and application of the relevant technical data to that model; and
- the results of the analysis, and the compliance conclusion for the site.

In addition, two Appendices are included. Appendix A provides background on the FCC MPE limit, along with a list of key FCC references on MPE compliance, and Appendix B provides a summary of the qualifications of the expert certifying the FCC compliance for the subject antenna operations.

Note on Non-Interference

In connection with the RF emissions from the proposed antenna operation, we note that Verizon Wireless has been granted by the FCC exclusive geographic rights to its channel frequencies, and is further subject to strict FCC technical standards on parameters such as maximum power and out-of-band emissions, as well as regulations related to non-interference. Therefore, we can provide a clear assurance that the proposed antenna operation will not interfere with public safety communications, or the usual and customary reception of radio, television, or other communications services enjoyed by the nearby residential and non-residential properties, or other existing telecommunications devices. At the same time, however, we would be professionally remiss in omitting a reference to a July 2003 FCC decision – a "Memorandum Opinion and Order" in "WT Docket No. 02-100" that related to interference. That FCC Order concluded that any local ordinance requiring a certification of non-interference related to a wireless antenna siting application represents "impermissible regulation" of RF interference, an area under exclusive FCC jurisdiction and federally-preempted from local regulation.

Antenna and Transmission Data

The table below provides the key compliance-related data for the Verizon Wireless antenna operations, as proposed to be modified.

General Data	
Frequency Bands	746 MHz, 850 MHz, 1900 MHz and 2100 MHz
Service Coverage Type	Sectorized
Antenna Type	Directional Panel
Antenna Model	Amphenol OCT656KBU000G
Antenna Centerline Heights AGL	128 ft. 3 in. and 135 ft. 3 in.
Antenna Line Loss	Conservatively ignored (assumed 0 dB)
746 MHz Antenna Data	
Antenna Maximum Gain	13.8 dBi
RF Channels per Sector	2 @ 60 watts

850 MHz Antenna Data	
Antenna Maximum Gain	14.7 dBi
RF Channels per Sector	8 @ 20 watts
1900 MHz Antenna Data	
Antenna Maximum Gain	16.9 dBi
RF Channels per Sector	6 @ 16 watts and 2 @ 60 watts
2100 MHz Antenna Data	
Antenna Maximum Gain	17.2 dBi
RF Channels per Sector	2 @ 60 watts

The antenna vertical-plane radiation pattern is used in the calculations of RF levels at ground level around a site. By way of illustration, Figure 1 that follows shows the vertical-plane radiation pattern of the proposed antenna model in the 1900 MHz frequency band. Note that in this type of diagram, the antenna is effectively pointed at the three o'clock position (the horizon) and the relative strength of the pattern at different angles is described using decibel units.

Figure 1. Amphenol OCT656KBU000G Antenna – 1900 MHz Vertical-plane Pattern

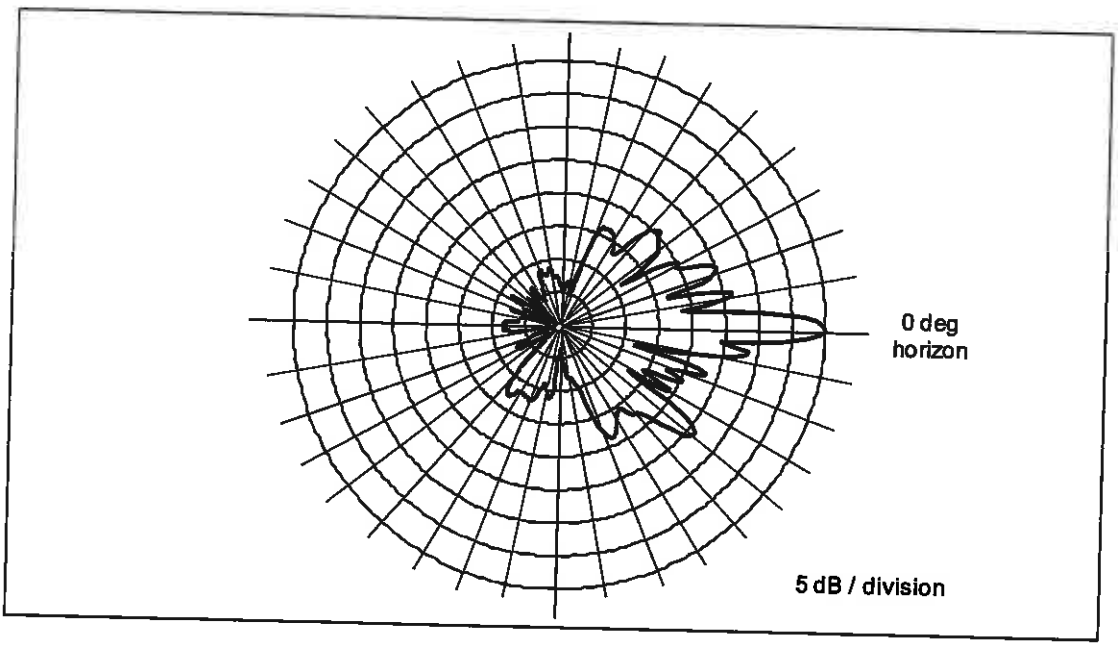

As noted at the outset, there are other wireless antenna operations at the site that we need to include in the compliance assessment, each of which involves directional panel antennas arranged for sectorized wireless service coverage. In the analysis for each of the wireless carriers, we will conservatively assume operation with maximum channel capacity and at maximum transmitter power in each of their respective FCC-licensed wireless frequency bands.

AT&T is licensed to operate in the 700 MHz, 850 MHz and 1900 MHz frequency bands. In the 700 MHz band, AT&T uses as many as four RF channels per antenna sector and a maximum transmitter power of 40 watts. In the 850 MHz band, AT&T uses two 20-watt channels and two 40-watt channels per sector. In the 1900 MHz band, AT&T uses two 60-watt channels and two 80-watt channels per sector.

Sprint is licensed to operate in the 860 MHz, 1900 MHz and 2500 MHz frequency bands. In the 860 MHz band, Sprint uses two 40-watt channels per antenna sector. In the 1900 MHz band, Sprint uses two 20-watt channels and two 40-watt channels per sector. In the 2500 MHz band, Sprint uses four 5-watt channels and four 10-watt channels per sector.

T-Mobile is licensed to operate in the 700 MHz, 1900 MHz and 2100 MHz frequency bands. In the 700 MHz band, T-Mobile uses one 40-watt channel per sector. In the 1900 MHz band, T-Mobile uses four 20-watt channels and one 40-watt channel (for a total of 120 watts) per sector. In the 2100 MHz band, T-Mobile uses one 80-watt channel and two 40-watt channels (for a total of 160 watts) per sector.

Although there may be other antennas at this site, a search of FCC records indicates there are no other licensed transmitting antennas to include in the compliance assessment.

Compliance Analysis

FCC Office of Engineering and Technology Bulletin 65 ("OET Bulletin 65") provides guidelines for mathematical models to calculate the RF levels at various points around transmitting antennas. At street-level around an antenna site (in what is called the "far field" of the antennas), the RF levels are directly proportional to the total antenna input power and the relative antenna gain in the downward direction of interest – and the levels are otherwise inversely proportional to the square of the straight-line distance to the antenna. Conservative calculations also assume the potential RF exposure is enhanced by reflection of the RF energy from the ground. Our calculations will assume a 100% "perfect" reflection, the worst-case approach.

The formula for street-level RF compliance calculations for any given wireless antenna operation is as follows:

$$MPE\% = (100 * TxPower * 10^{(Gmax-Vdisc/10)} * 4) / (MPE * 4\pi * R^2)$$

where

MPE%	=	RF level, expressed as a percentage of the MPE limit applicable to continuous exposure of the general public
100	=	factor to convert the raw result to a percentage
TxPower	=	maximum net power into antenna sector, in milliwatts, a function of the number of channels per sector, the transmitter power per channel, and line loss
$10^{(Gmax-Vdisc/10)}$	=	numeric equivalent of the relative antenna gain in the downward direction of interest, referenced to any applied antenna mechanical downtilt; data on the antenna vertical-plane pattern is taken from manufacturer specifications
4	=	factor to account for a 100-percent-efficient ground reflection, and the squared relationship between RF field strength and power density ($2^2 = 4$)
MPE	=	FCC general population MPE limit
R	=	straight-line distance from the RF source to the point of interest, centimeters

The MPE% calculations are performed out to a distance of 500 feet from the facility to points 6.5 feet (approximately two meters, the FCC-recommended standing height) off the ground, as illustrated in Figure 2, below.

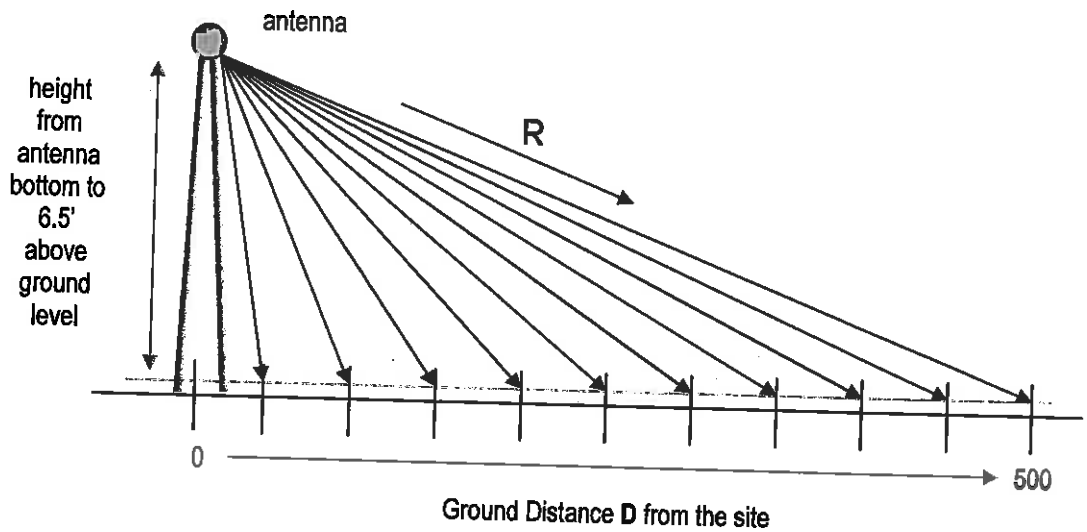

Figure 2. MPE% Calculation Geometry

It is popularly understood that the farther away one is from an antenna, the lower the RF level – which is generally but not universally correct. The results of MPE% calculations fairly close to the site will reflect the variations in the vertical-plane antenna pattern as well as the variation in straight-line distance to the antennas. Therefore, RF levels may actually increase slightly with increasing distance within the range of zero to 500 feet from the site. As the distance approaches 500 feet and beyond, though, the antenna pattern factor becomes less significant, the RF levels become primarily distance-controlled, and as a result the RF levels generally decrease with increasing distance, and are well understood to be in compliance.

FCC compliance for a collocated antenna site is assessed in the following manner. At each distance point along the ground, an MPE% calculation is made for each antenna operation, and the sum of the individual MPE% contributions at each point is compared to 100 percent, the normalized reference for compliance

with the MPE limit. We refer to the sum of the individual MPE% contributions as "total MPE%", and any calculated total MPE% result exceeding 100 percent is, by definition, higher than the FCC limit and represents non-compliance and a need to mitigate the potential exposure. If all results are consistently below 100 percent, on the other hand, that set of results serves as a clear and sufficient demonstration of compliance with the MPE limit.

The following conservative methodology and assumptions are incorporated into the MPE% calculations on a general basis:

1. The antennas are assumed to be operating continuously at maximum power, and at maximum channel capacity. In addition, the effects of antenna line loss are ignored wherever possible.
2. The power-attenuation effects of shadowing or other obstructions to the line-of-sight path from the antenna to the point of interest are ignored.
3. The calculations intentionally minimize the distance factor (R) by assuming a 6'6" human and performing the calculations from the bottom (rather than the centerline) of each operator's lowest-mounted like antenna, as applicable.
4. The potential RF exposure at ground level is assumed to be 100-percent enhanced (increased) via a "perfect" field reflection from the intervening ground.

The net result of these assumptions is to significantly overstate the calculated RF exposure levels relative to the levels that will actually occur – and the purpose of this conservatism is to allow very "safe-side" conclusions about compliance.

The table on the following page provides the results of the MPE% calculations for each operator, with the worst-case result highlighted in bold in the last column.

Ground Distance (ft)	Verizon Wireless 746 MHz MPE%	Verizon Wireless 850 MHz MPE%	Verizon Wireless 1900 MHz MPE%	Verizon Wireless 2100 MHz MPE%	AT&T MPE%	Sprint MPE%	T-Mobile MPE%	Total MPE%
0	0.0121	0.0503	0.0090	0.0141	0.0473	0.0084	0.0028	0.1440
20	0.0112	0.0850	0.0136	0.0444	0.0582	0.0106	0.0122	0.2352
40	0.0095	0.0507	0.0281	0.0746	0.1026	0.0323	0.0161	0.3139
60	0.0319	0.0528	0.1607	0.0458	0.1442	0.0062	0.0702	0.5119
80	0.0632	0.1618	0.0728	0.0212	0.0601	0.0734	0.0313	0.4839
100	0.1820	0.2448	0.0855	0.0099	0.0504	0.0965	0.1390	0.8082
120	0.2277	0.1112	0.1286	0.0284	0.3368	0.1182	0.3524	1.3033
140	0.1134	0.0183	0.3601	0.0178	0.8999	0.0599	0.2945	**1.7640**
160	0.0124	0.0264	0.3057	0.0219	1.0968	0.0541	0.0452	1.5625
180	0.0048	0.0517	0.0244	0.0340	0.6465	0.0472	0.0935	0.9021
200	0.0141	0.0465	0.0538	0.0164	0.3317	0.0366	0.1074	0.6066
220	0.0114	0.0243	0.0315	0.0116	0.1566	0.1188	0.1028	0.4569
240	0.0064	0.0054	0.0165	0.0080	0.1021	0.1324	0.1001	0.3710
260	0.0095	0.0054	0.0470	0.0165	0.0962	0.0952	0.0723	0.3420
280	0.0273	0.0312	0.0315	0.0374	0.1257	0.0683	0.0575	0.3789
300	0.0384	0.0482	0.0198	0.0303	0.1758	0.0741	0.0661	0.4528
320	0.0496	0.0638	0.0244	0.0210	0.3136	0.0771	0.1024	0.6519
340	0.0574	0.0755	0.0399	0.0217	0.3497	0.0688	0.1536	0.7666
360	0.0609	0.0801	0.0521	0.0303	0.3725	0.0583	0.1923	0.8464
380	0.0606	0.0760	0.0494	0.0354	0.3967	0.0455	0.1928	0.8564
400	0.0526	0.0646	0.0326	0.0294	0.3610	0.0413	0.1750	0.7565
420	0.0410	0.0469	0.0133	0.0169	0.4040	0.0492	0.1332	0.7045
440	0.0376	0.0430	0.0122	0.0155	0.4755	0.0913	0.1219	0.7970
460	0.0256	0.0244	0.0025	0.0097	0.4374	0.0837	0.0640	0.6473
480	0.0153	0.0088	0.0023	0.0110	0.5209	0.0771	0.0590	0.6943
500	0.0141	0.0081	0.0021	0.0102	0.4821	0.1344	0.0224	0.6735

As indicated, even with the significant degree of conservatism built into the calculations, the maximum calculated RF level is 1.7640 percent of the FCC MPE limit – well below the 100-percent reference for compliance.

A graph of the overall calculation results, provided below, probably provides a clearer *visual* illustration of the relative compliance of the calculated RF levels. The line representing the calculated total MPE% results barely rises above the graph's zero baseline, and shows an obviously clear and consistent margin to the FCC MPE limit.

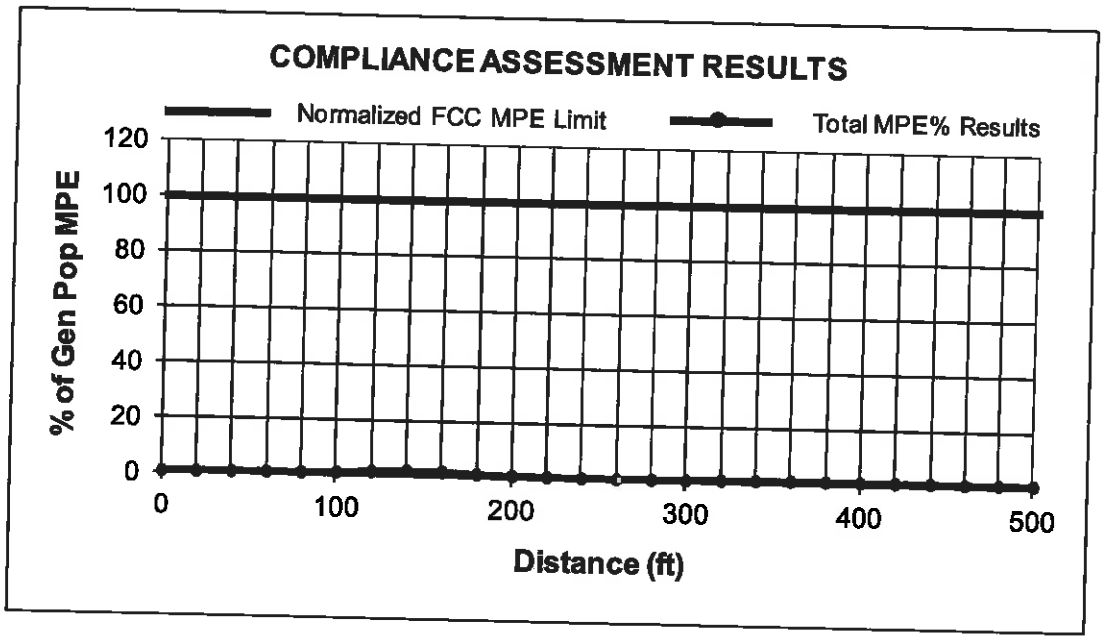

Compliance Conclusion

According to the FCC, the MPE limit has been constructed in such a manner that continuous human exposure to RF emissions up to and including 100 percent of the MPE limit is acceptable and safe.

The analysis in this case shows that the maximum calculated RF level from the combination of the Verizon Wireless antenna operations, as proposed to be modified, along with the other existing antenna operations at the site, is 1.7640

percent of the FCC MPE limit. In other words, the worst-case calculated RF level from the combination of antenna operations is more than 55 times below the limit established as safe for continuous human exposure to the RF emissions from antennas.

The results of the calculations provide a clear demonstration of compliance with the FCC MPE limit. Moreover, because of the conservative calculation methodology and operational assumptions we applied in the analysis, RF levels actually caused by the antennas will be even less significant than the calculation results here indicate.

Certification

The undersigned certifies as follows:

1. I have read and fully understand the FCC regulations concerning RF safety and the control of human exposure to RF fields (47 CFR 1.1301 *et seq*).
2. To the best of my knowledge, the statements and information disclosed in this report are true, complete and accurate.
3. The analysis of RF compliance provided herein is consistent with the applicable FCC regulations, additional guidelines issued by the FCC, and industry practice.
4. The results of the analysis indicate that the antenna operations at the subject site will be in compliance with the FCC regulations concerning RF exposure.

Daniel J. Collins
Chief Technical Officer

6/30/16
Date

Appendix A. Background on the FCC MPE Limit

FCC Rules and Regulations

As directed by the Telecommunications Act of 1996, the FCC has established limits for maximum continuous human exposure to RF fields.

The FCC maximum permissible exposure (MPE) limits represent the consensus of federal agencies and independent experts responsible for RF safety matters. Those agencies include the National Council on Radiation Protection and Measurements (NCRP), the Occupational Safety and Health Administration (OSHA), the National Institute for Occupational Safety and Health (NIOSH), the American National Standards Institute (ANSI), the Environmental Protection Agency (EPA), and the Food and Drug Administration (FDA). In formulating its guidelines, the FCC also considered input from the public and technical community – notably the Institute of Electrical and Electronics Engineers (IEEE).

The FCC's RF exposure guidelines are incorporated in Section 1.301 *et seq* of its Rules and Regulations (47 CFR 1.1301-1.1310). Those guidelines specify MPE limits for both occupational and general population exposure.

The specified continuous exposure MPE limits are based on known variation of human body susceptibility in different frequency ranges, and a Specific Absorption Rate (SAR) of 4 watts per kilogram, which is universally considered to accurately represent human capacity to dissipate incident RF energy (in the form of heat). The occupational MPE guidelines incorporate a safety factor of 10 or greater with respect to RF levels known to represent a health hazard, and an additional safety factor of five is applied to the MPE limits for general population exposure. Thus, the general population MPE limit has a built-in safety factor of more than 50. The limits were constructed to appropriately protect humans of both sexes and all ages and sizes and under all conditions – and continuous exposure at levels equal to or below the applicable MPE limits is considered to result in no adverse health effects or even health risk.

The reason for *two* tiers of MPE limits is based on an understanding and assumption that members of the general public are unlikely to have had appropriate RF safety training and may not be aware of the exposures they receive; occupational exposure in controlled environments, on the other hand, is assumed to involve individuals who have had such training, are aware of the exposures, and know how to maintain a safe personal work environment.

The FCC's RF exposure limits are expressed in two equivalent forms, using alternative units of field strength (expressed in volts per meter, or V/m), and power density (expressed in milliwatts per square centimeter, or mW/cm^2). The table on the next page lists the FCC limits for both occupational and general population exposures, using the mW/cm^2 reference, for the different radio frequency ranges.

Frequency Range (F) (MHz)	Occupational Exposure (mW/cm^2)	General Public Exposure (mW/cm^2)
0.3 - 1.34	100	100
1.34 - 3.0	100	180 / F^2
3.0 - 30	900 / F^2	180 / F^2
30 - 300	1.0	0.2
300 - 1,500	F / 300	F / 1500
1,500 - 100,000	5.0	1.0

The diagram below provides a graphical illustration of both the FCC's occupational and general population MPE limits.

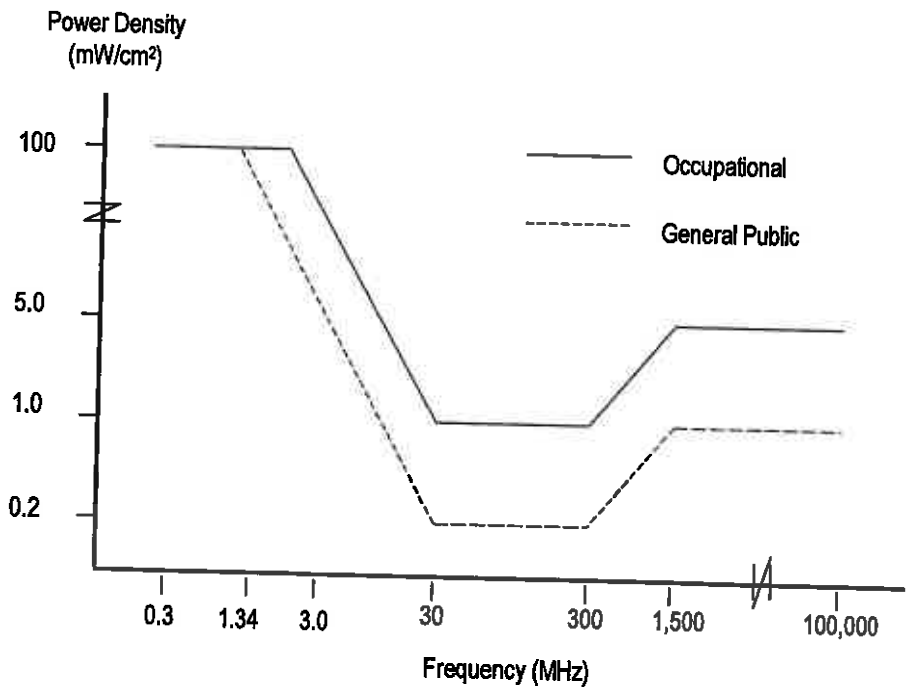

Because the FCC's MPE limits are frequency-shaped, the exact MPE limits applicable to the instant situation depend on the frequency range used by the systems of interest.

The most appropriate method of determining RF compliance is to calculate the RF power density attributable to a particular system and compare that to the MPE limit applicable to the operating frequency in question. The result is usually expressed as a percentage of the MPE limit.

For potential exposure from multiple systems, the respective percentages of the MPE limits are added, and the total percentage compared to 100 (percent of the limit). If the result is less than 100, the total exposure is in compliance; if it is more than 100, exposure mitigation measures are necessary to achieve compliance.

Note that the FCC "categorically excludes" certain types of antenna facilities from the routine requirement to specifically (i.e., mathematically) demonstrate compliance with the MPE limit. Among those types of facilities are cellular antennas mounted on any type of tower, when the bottoms of the antennas are more than 10 meters (c. 32.8 feet) above ground. The basis for the categorical exclusion, according to the FCC, is the understanding that because of the low power and the directionality of the antennas, such facilities – individually and collectively – are well understood to have no significant effect on the human environment. As a result, the FCC automatically deems such facilities to be in compliance.

FCC References on Compliance

47 CFR, FCC Rules and Regulations, Part 1 (Practice and Procedure), Section 1.1310 (Radiofrequency radiation exposure limits).

FCC Second Memorandum Opinion and Order and Notice of Proposed Rulemaking (FCC 97-303), *In the Matter of Procedures for Reviewing Requests for Relief From State and Local Regulations Pursuant to Section 332(c)(7)(B)(v) of the Communications Act of 1934 (WT Docket 97-192), Guidelines for Evaluating the Environmental Effects of Radiofrequency Radiation (ET Docket 93-62), and Petition for Rulemaking of the Cellular Telecommunications Industry Association Concerning Amendment of the Commission's Rules to Preempt State and Local Regulation of Commercial Mobile Radio Service Transmitting Facilities*, released August 25, 1997.

FCC First Memorandum Opinion and Order, ET Docket 93-62, *In the Matter of Guidelines for Evaluating the Environmental Effects of Radiofrequency Radiation*, released December 24, 1996.

FCC Report and Order, ET Docket 93-62, *In the Matter of Guidelines for Evaluating the Environmental Effects of Radiofrequency Radiation*, released August 1, 1996.

FCC Office of Engineering and Technology (OET) Bulletin 65, "Evaluating Compliance with FCC Guidelines for Human Exposure to Radiofrequency Electromagnetic Fields", Edition 97-01, August 1997.

Appendix B. Summary of Expert Qualifications

Daniel J. Collins, Chief Technical Officer, Pinnacle Telecom Group, LLC

Synopsis:	• 40+ years of experience in all aspects of wireless system engineering, related regulation, and RF exposure • Has performed or led RF exposure compliance assessments on more than 20,000 antenna sites since the latest FCC regulations went into effect in 1997 • Has provided testimony as an RF compliance expert more than 1,500 times since 1997 • Have been accepted as an FCC compliance expert in New York, New Jersey, Connecticut, Pennsylvania and more than 40 other states, as well as by the FCC
Education:	• B.E.E., City College of New York (Sch. Of Eng.), 1971 • M.B.A., 1982, Fairleigh Dickinson University, 1982 • Bronx High School of Science, 1966
Current Responsibilities:	• Leads all PTG staff work involving RF safety and FCC compliance, microwave and satellite system engineering, and consulting on wireless technology and regulation
Prior Experience:	• Edwards & Kelcey, VP – RF Engineering and Chief Information Technology Officer, 1996-99 • Bellcore (a Bell Labs offshoot after AT&T's 1984 divestiture), Executive Director – Regulation and Public Policy, 1983-96 • AT&T (Corp. HQ), Division Manager – RF Engineering, and Director – Radio Spectrum Management, 1977-83 • AT&T Long Lines, Group Supervisor – Microwave Radio System Design, 1972-77
Specific RF Safety / Compliance Experience:	• Involved in RF exposure matters since 1972 • Have had lead corporate responsibility for RF safety and compliance at AT&T, Bellcore, Edwards & Kelcey, and PTG • While at AT&T, helped develop the mathematical models for calculating RF exposure levels • Have been relied on for compliance by all major wireless carriers, as well as by the federal government, several state and local governments, equipment manufacturers, system integrators, and other consulting / engineering firms
Other Background:	• Author, *Microwave System Engineering* (AT&T, 1974) • Co-author and executive editor, *A Guide to New Technologies and Services* (Bellcore, 1993) • National Spectrum Management Association (NSMA) – former three-term President and Chairman of the Board of Directors; was founding member, twice-elected Vice President, long-time member of the Board, and was named an NSMA Fellow in 1991 • Have published more than 35 articles in industry magazines

EXHIBIT 4
EAF

Short Environmental Assessment Form
Part 1 - Project Information

Instructions for Completing

Part 1 - Project Information. The applicant or project sponsor is responsible for the completion of Part 1. Responses become part of the application for approval or funding, are subject to public review, and may be subject to further verification. Complete Part 1 based on information currently available. If additional research or investigation would be needed to fully respond to any item, please answer as thoroughly as possible based on current information.

Complete all items in Part 1. You may also provide any additional information which you believe will be needed by or useful to the lead agency; attach additional pages as necessary to supplement any item.

Part 1 - Project and Sponsor Information

New York SMSA Limited Partnership d/b/a Verizon Wireless

Name of Action or Project:

Modification to Verizon Wireless Public Utility Wireless Telecommunications Facility

Project Location (describe, and attach a location map):

NYS Route 35 (Block 10263, Lots 1 & 62)

Brief Description of Proposed Action:

Installation of replacement antennas together with ancillary equipment on the existing tower, and renew the special permit for (5) years.

Name of Applicant or Sponsor:	Telephone: 914-333-0700
New York SMSA Limited Partnership d/b/a Verizon Wireless	E-Mail: lsnyder@snyderlaw.net

Address:

c/o Snyder & Snyder LLP, 94 White Plains Road

City/PO:	State:	Zip Code:
Tarrytown	NY	10591

	NO	YES
1. Does the proposed action only involve the legislative adoption of a plan, local law, ordinance, administrative rule, or regulation? If Yes, attach a narrative description of the intent of the proposed action and the environmental resources that may be affected in the municipality and proceed to Part 2. If no, continue to question 2.	☑	☐
2. Does the proposed action require a permit, approval or funding from any other governmental Agency? If Yes, list agency(s) name and permit or approval: Special Permit - Planning Board; Building Permit - Building Department	☐	☑

3.a. Total acreage of the site of the proposed action? approx .08 acres

b. Total acreage to be physically disturbed? 0 acres

c. Total acreage (project site and any contiguous properties) owned or controlled by the applicant or project sponsor? approx .08 acres

4. Check all land uses that occur on, adjoining and near the proposed action.

☐ Urban ☑ Rural (non-agriculture) ☐ Industrial ☐ Commercial ☑ Residential (suburban)

☑ Forest ☐ Agriculture ☐ Aquatic ☑ Other (specify): Wireless Telecommunications Facility

☑ Parkland

	NO	YES	N/A
5. Is the proposed action, a. A permitted use under the zoning regulations?	☐	☑	☐
b. Consistent with the adopted comprehensive plan?	☐	☑	☐

	NO	YES
6. Is the proposed action consistent with the predominant character of the existing built or natural landscape?	☐	☑
7. Is the site of the proposed action located in, or does it adjoin, a state listed Critical Environmental Area? If Yes, identify: _____	☑	☐
8. a. Will the proposed action result in a substantial increase in traffic above present levels?	☑	☐
b. Are public transportation service(s) available at or near the site of the proposed action?	☑	☐
c. Are any pedestrian accommodations or bicycle routes available on or near site of the proposed action?	☑	☐
9. Does the proposed action meet or exceed the state energy code requirements? If the proposed action will exceed requirements, describe design features and technologies: _____	☐	☑
10. Will the proposed action connect to an existing public/private water supply? If No, describe method for providing potable water: The facility will be unmanned; therefore potable water is not required	☑	☐
11. Will the proposed action connect to existing wastewater utilities? If No, describe method for providing wastewater treatment: The facility will be unmanned; therefore no wastewater is produced	☑	☐
12. a. Does the site contain a structure that is listed on either the State or National Register of Historic Places?	☑	☐
b. Is the proposed action located in an archeological sensitive area? N/A - Proposed action is on an existing tower	☐	☑
13. a. Does any portion of the site of the proposed action, or lands adjoining the proposed action, contain wetlands or other waterbodies regulated by a federal, state or local agency?	☑	☐
b. Would the proposed action physically alter, or encroach into, any existing wetland or waterbody? If Yes, identify the wetland or waterbody and extent of alterations in square feet or acres: _____	☑	☐

14. Identify the typical habitat types that occur on, or are likely to be found on the project site. Check all that apply:
☐ Shoreline ☑ Forest ☐ Agricultural/grasslands ☐ Early mid-successional
☐ Wetland ☐ Urban ☑ Suburban

	NO	YES
15. Does the site of the proposed action contain any species of animal, or associated habitats, listed by the State or Federal government as threatened or endangered?	☑	☐
16. Is the project site located in the 100 year flood plain?	☑	☐
17. Will the proposed action create storm water discharge, either from point or non-point sources? If Yes, a. Will storm water discharges flow to adjacent properties? ☐ NO ☐ YES	☑	☐
b. Will storm water discharges be directed to established conveyance systems (runoff and storm drains)? If Yes, briefly describe: ☐ NO ☐ YES		

	NO	YES
18. Does the proposed action include construction or other activities that result in the impoundment of water or other liquids (e.g. retention pond, waste lagoon, dam)? If Yes, explain purpose and size:	✓	
19. Has the site of the proposed action or an adjoining property been the location of an active or closed solid waste management facility? If Yes, describe:	✓	
20. Has the site of the proposed action or an adjoining property been the subject of remediation (ongoing or completed) for hazardous waste? If Yes, describe:	✓	

I AFFIRM THAT THE INFORMATION PROVIDED ABOVE IS TRUE AND ACCURATE TO THE BEST OF MY KNOWLEDGE

Applicant/sponsor name: New York SMSA Limited Partnership d/b/a Verizon Wireless Date: 11/17/16

Signature: By: _____, as attorney

PRINT FORM

EAF Mapper Summary Report

Wednesday, June 29, 2016 5:21 PM

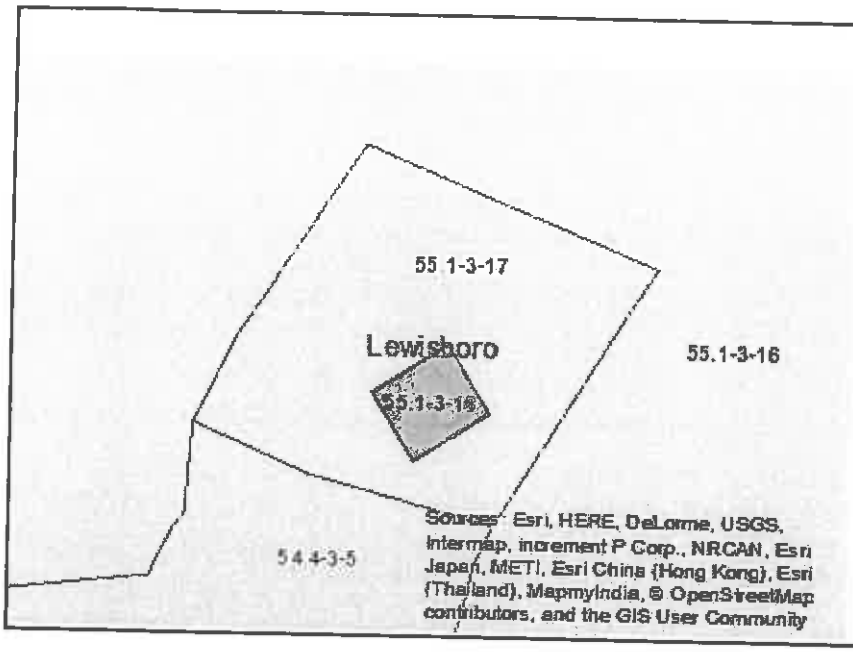

Disclaimer: The EAF Mapper is a screening tool intended to assist project sponsors and reviewing agencies in preparing an environmental assessment form (EAF). Not all questions asked in the EAF are answered by the EAF Mapper. Additional information on any EAF question can be obtained by consulting the EAF Workbooks. Although the EAF Mapper provides the most up-to-date digital data available to DEC, you may also need to contact local or other data sources in order to obtain data not provided by the Mapper. Digital data is not a substitute for agency determinations.

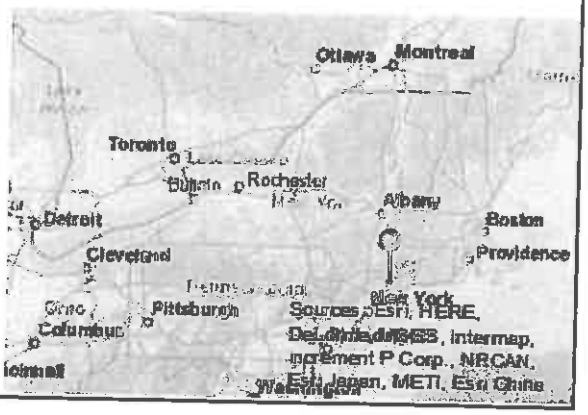

Part 1 / Question 7 [Critical Environmental Area]	No
Part 1 / Question 12a [National Register of Historic Places]	No
Part 1 / Question 12b [Archeological Sites]	Yes
Part 1 / Question 13a [Wetlands or Other Regulated Waterbodies]	No
Part 1 / Question 15 [Threatened or Endangered Animal]	No
Part 1 / Question 16 [100 Year Flood Plain]	No
Part 1 / Question 20 [Remediation Site]	No

Agency Use Only [If applicable]

Project:

Date:

Short Environmental Assessment Form
Part 2 - Impact Assessment

Part 2 is to be completed by the Lead Agency.
Answer all of the following questions in Part 2 using the information contained in Part 1 and other materials submitted by the project sponsor or otherwise available to the reviewer. When answering the questions the reviewer should be guided by the concept "Have my responses been reasonable considering the scale and context of the proposed action?"

	No, or small impact may occur	Moderate to large impact may occur
1. Will the proposed action create a material conflict with an adopted land use plan or zoning regulations?	✓	
2. Will the proposed action result in a change in the use or intensity of use of land?	✓	
3. Will the proposed action impair the character or quality of the existing community?	✓	
4. Will the proposed action have an impact on the environmental characteristics that caused the establishment of a Critical Environmental Area (CEA)?	✓	
5. Will the proposed action result in an adverse change in the existing level of traffic or affect existing infrastructure for mass transit, biking or walkway?	✓	
6. Will the proposed action cause an increase in the use of energy and it fails to incorporate reasonably available energy conservation or renewable energy opportunities?	✓	
7. Will the proposed action impact existing: a. public / private water supplies?	✓	
b. public / private wastewater treatment utilities?	✓	
8. Will the proposed action impair the character or quality of important historic, archaeological, architectural or aesthetic resources?	✓	
9. Will the proposed action result in an adverse change to natural resources (e.g., wetlands, waterbodies, groundwater, air quality, flora and fauna)?	✓	
10. Will the proposed action result in an increase in the potential for erosion, flooding or drainage problems?	✓	
11. Will the proposed action create a hazard to environmental resources or human health?	✓	

PRINT FORM

Agency Use Only [If applicable]

Project:

Date:

Short Environmental Assessment Form
Part 3 Determination of Significance

For every question in Part 2 that was answered "moderate to large impact may occur", or if there is a need to explain why a particular element of the proposed action may or will not result in a significant adverse environmental impact, please complete Part 3. Part 3 should, in sufficient detail, identify the impact, including any measures or design elements that have been included by the project sponsor to avoid or reduce impacts. Part 3 should also explain how the lead agency determined that the impact may or will not be significant. Each potential impact should be assessed considering its setting, probability of occurring, duration, irreversibility, geographic scope and magnitude. Also consider the potential for short-term, long-term and cumulative impacts.

☐ Check this box if you have determined, based on the information and analysis above, and any supporting documentation, that the proposed action may result in one or more potentially large or significant adverse impacts and an environmental impact statement is required.

☑ Check this box if you have determined, based on the information and analysis above, and any supporting documentation, that the proposed action will not result in any significant adverse environmental impacts.

Town of Lewisboro Planning Board Name of Lead Agency	Date
Print or Type Name of Responsible Officer in Lead Agency	Title of Responsible Officer
Signature of Responsible Officer in Lead Agency	Signature of Preparer (if different from Responsible Officer)

PRINT FORM

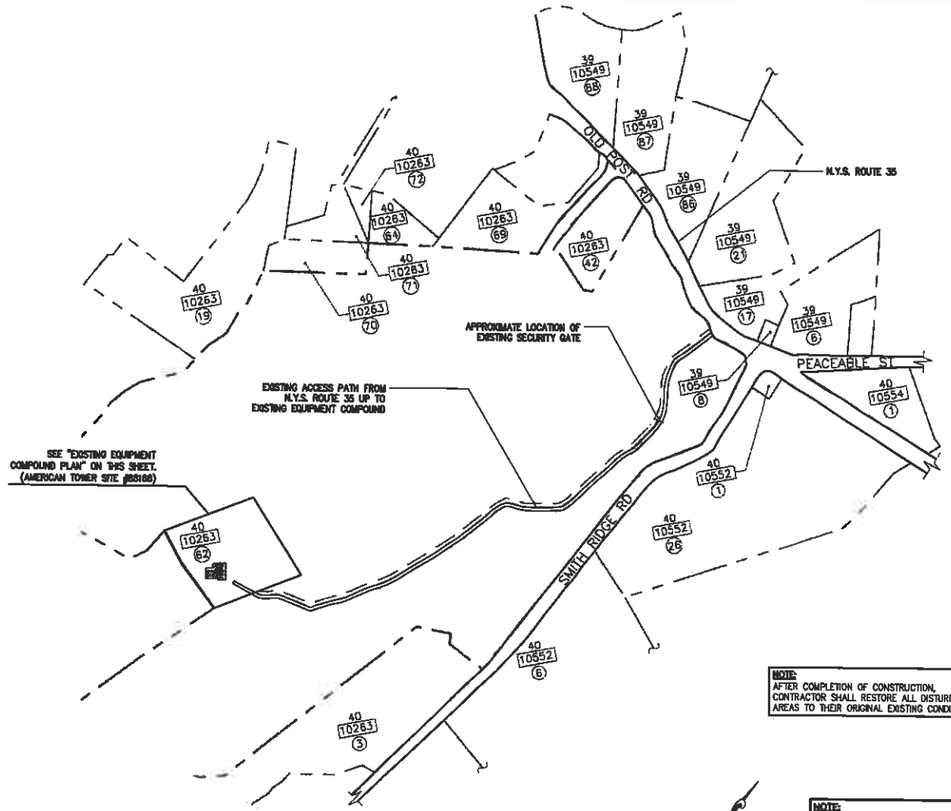

NOTE:
AFTER COMPLETION OF CONSTRUCTION, CONTRACTOR SHALL RESTORE ALL DISTURBED AREAS TO THEIR ORIGINAL EXISTING CONDITIONS.

GRAPHIC SCALE
300 0 100 200 600
(IN FEET)

1 LOCATION PLAN
SCALE: 1" = 300'

NOTE:
AC CONDENDSING UNITS AND GENERATOR WERE INSTALLED PURSUANT TO BUILDING PERMITS DATED MARCH 22, 2004 AND JUNE 24, 2004, RESPECTIVELY. THE GENERATOR IS MORE THAN 1,000 FROM THE NEAREST EXISTING STRUCTURE.

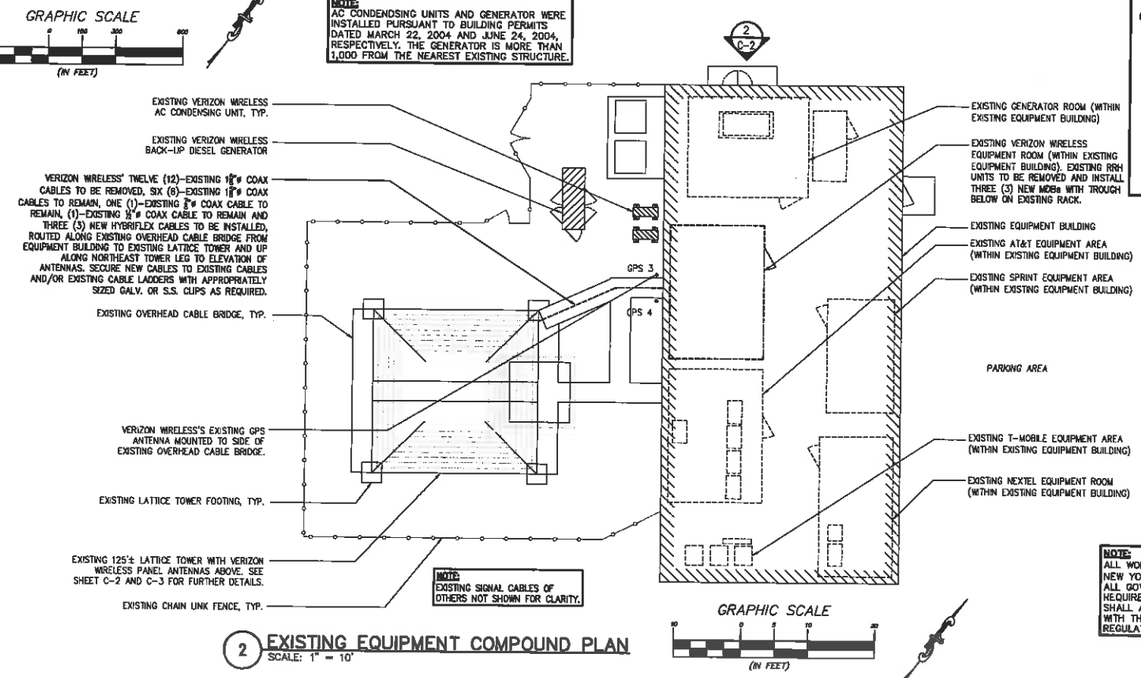

NOTE:
EXISTING SIGNAL CABLES OF OTHERS NOT SHOWN FOR CLARITY.

GRAPHIC SCALE
10 0 5 10 20
(IN FEET)

2 EXISTING EQUIPMENT COMPOUND PLAN
SCALE: 1" = 10'

NOTE:
ALL WORK SHALL BE IN ACCORDANCE WITH THE "BUILDING CODE OF NEW YORK STATE," 2010 EDITION AND WITH THE REGULATIONS OF ALL GOVERNMENTAL AGENCIES HAVING JURISDICTION. WHERE THE REQUIREMENTS OF VARIOUS CODES CONFLICT, THE MORE STRINGENT SHALL APPLY. ALL ELECTRICAL WORK SHALL BE IN ACCORDANCE WITH THE NATIONAL ELECTRICAL CODE AND WITH THE RULES AND REGULATIONS OF THE LOCAL UTILITY COMPANIES WHEN APPLICABLE.

TOPOGRAPHIC MAP

PROJECT INFORMATION

1. Scope of Work:
The purpose of these drawings is to illustrate the following:
- Replace six (6) panel antennas (transmit and receive) mounted to the existing 125'± lattice tower on existing mounting pipes on side of platform
- Remove three (3) panel antennas (transmit and receive) mounted to the existing 125'± lattice tower on existing mounting pipes on side of platform.
- Install twelve (12) RRH units and three (3) main distribution boxes on new rack mounted to the existing 125'± lattice tower.
- Remove twelve (12) 1-5/8"ø of eighteen (18) existing coax cables routed up along existing lattice tower leg up to new panel antennas.
- Install three (3) hybriflex cables routed up along existing lattice tower leg up to new panel antennas.
- Remove existing RRH units and install three (3) main distribution boxes within existing equipment room on existing rack.

2. Applicant:
New York SMSA Limited Partnership
d/b/a Verizon Wireless
4 Centerock Road
West Nyack, NY 10994

3. Engineer of Record:
James H. Fahey, P.E., S.E.
Structural Consulting Services, P.C.
67 Federal Road
Brookfield, CT 06804

4. Property Contact:
American Tower Corporation (Site Number 86186)
116 Huntington Avenue (11th floor)
Boston, MA 02116
(617) 375-7500

5. Site Data:

Street Address:	N.Y.S. Route 35 South Salem, NY 10590
Block:	10263
Lots:	1 & 62
Zoning District:	R-4A (1 Family Residence District)
Existing Use:	Wireless Telecommunications Facility
New Use:	Unchanged
Approximate Latitude:	N41° 15' 30.43" (NAD '83)
Approximate Longitude:	W73° 32' 04.82" (NAD '83)
Approximate Ground Elevation:	758 feet (NAVD '88)

6. Notes:
1.) New features labeled as such; all else existing.
2.) Boundary information and existing features shown hereon were taken from limited field measurements taken on 12/8/2011 and from a drawing of the property entitled "Plot Plan & Site Plan" prepared by Tectonic Engineering & Surveying Consultants P.C.; 1279 Route 300; Newburgh, NY 12550 last revised 11/13/1999 for modifications to Verizon Wireless' installation at the site.
3.) The use is unmanned and will be visited approximately once a month for maintenance purposes; therefore the site is not anticipated to generate additional noise, fumes, vibrations or traffic.
4.) No additional parking is required as this is an unmanned site.
5.) No solid or liquid waste will be produced as this is an unmanned site; therefore, no water or sewage facilities are required.
6.) There will be no commercial or retail signs, nor special lighting required.
7.) Fire protection and security provisions will include remote monitoring of the subject site.

S C S
STRUCTURAL CONSULTING SERVICES, P.C.
67 FEDERAL ROAD, BROOKFIELD, CT 06804
TEL: 203.740.7578 FAX: 203.775.5670

CLIENT:
verizon wireless
4 CENTEROCK ROAD
WEST NYACK, NEW YORK 10994

No.	ISSUE OR REVISION	DATE
2	ISSUED FOR FILING	6/29/16
1	ISSUED FOR REVIEW	6/2/16

No use, reproduction or dissemination may be made of this drawing and the concepts set forth without the prior written consent of Structural Consulting Services, P.C. Copyright© 2016

PROJECT TITLE
New York SMSA Limited Partnership
d/b/a VERIZON WIRELESS
SITE: SOUTH SALEM ANTMO
N.Y.S. ROUTE 35
SOUTH SALEM, NY 10590

DRAWING TITLE
LOCATION PLAN, COMPOUND PLAN, PROJECT INFORMATION, TOPOGRAPHIC MAP AND NOTES

SEAL: STATE OF NEW YORK · JAMES H. FAHEY · 078603 · LICENSED PROFESSIONAL ENGINEER

SCALE	PROJECT NO.
AS NOTED	VER1609
DRAWN BY: KPH	DRAWING NO.
CHECKED BY: JHF	C-1
DATE: 6/2/16	

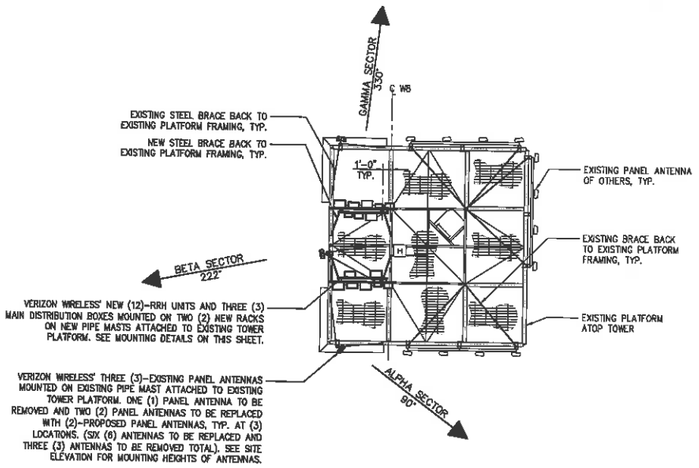

PLAN VIEW (@ PLATFORM LEVEL)

1 VERIZON WIRELESS ANTENNA ORIENTATION PLAN
SCALE: 1/8" = 1'-0"

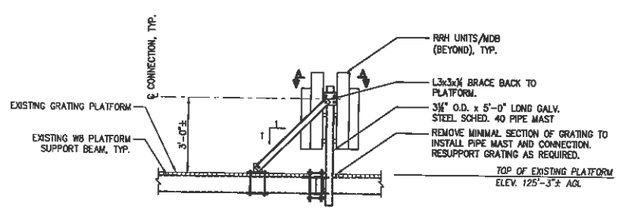

3 TYPICAL RRH PIPE MAST ELEVATION
SCALE: 3/8" = 1'-0"

NOTE:
THE COLOR OF THE PROPOSED ANTENNAS, MOUNTING FRAMING, CABLES, AND ASSOCIATED EQUIPMENT WILL APPROXIMATELY MATCH THE COLOR OF THE EXISTING TOWER.

NOTE:
EXISTING TOWER APPURTENANCES SHOWN SCHEMATICALLY FOR CLARITY.

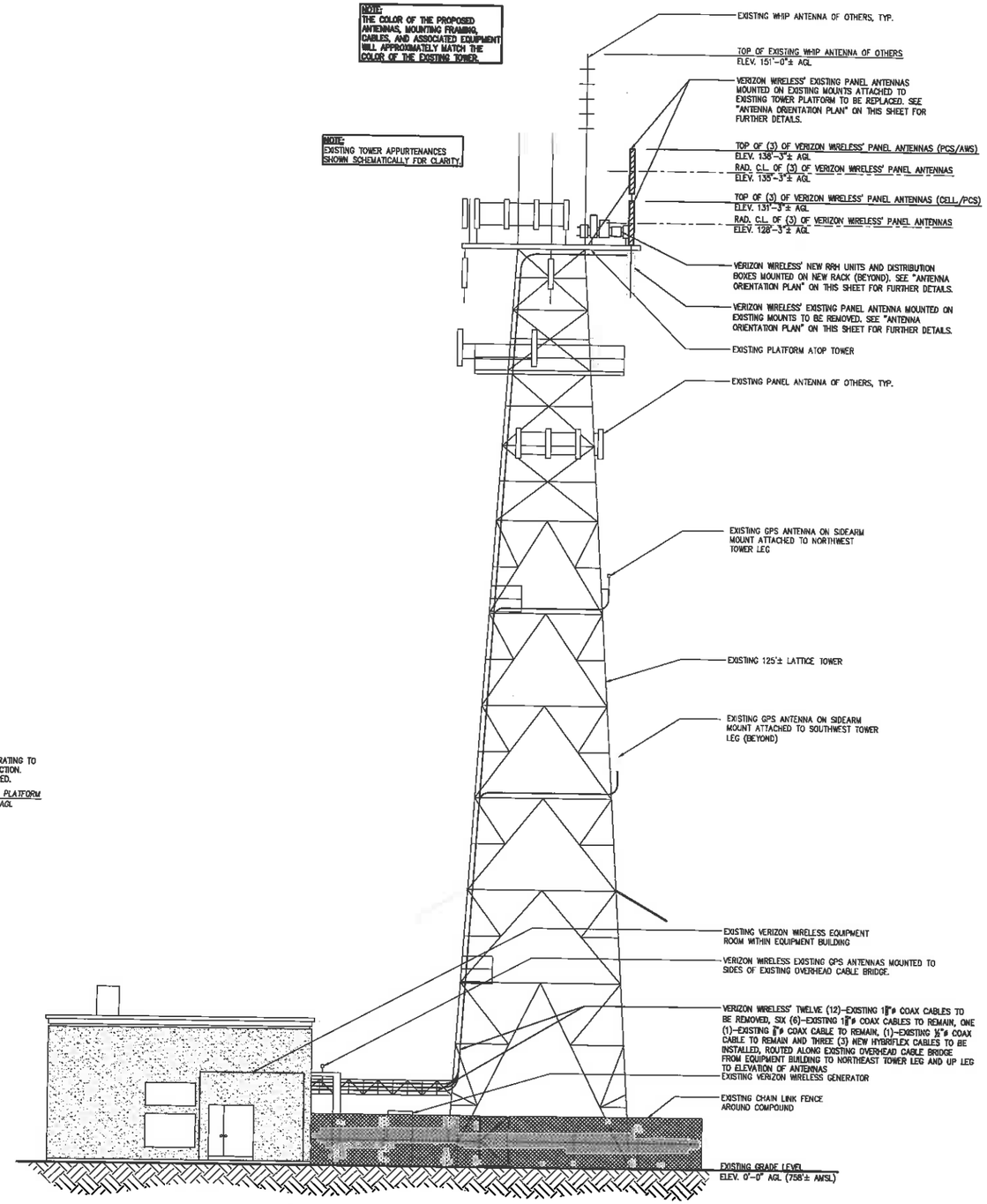

2 NORTH SITE ELEVATION
SCALE: 1/8" = 1'-0"

S C S STRUCTURAL CONSULTING SERVICES, P.C.
67 FEDERAL ROAD, BROOKFIELD, CT 06804
TEL: 203.740.7578 FAX: 203.775.5670

CLIENT:
verizonwireless
4 CENTEROCK ROAD
WEST NYACK, NEW YORK 10994

No.	ISSUE OR REVISION	DATE
2	ISSUED FOR FILING	8/28/18
1	ISSUED FOR REVIEW	6/2/18

No use, reproduction or dissemination may be made of this drawing and the concepts set forth without the prior written consent of Structural Consulting Services, P.C. Copyright © 2016

PROJECT TITLE
New York SMSA Limited Partnership
d/b/a VERIZON WIRELESS
SITE: SOUTH SALEM ANTMO
N.Y.S. ROUTE 35
SOUTH SALEM, NY 10590

DRAWING TITLE
SITE ELEVATION, ANTENNA & CABLE SCHEDULE, CABLE DIAGRAM AND NOTES

SEAL: STATE OF NEW YORK — JAMES H. FAHEY III — 078938 — LICENSED PROFESSIONAL ENGINEER

SCALE	PROJECT NO.
AS NOTED	VER1909
DRAWN BY: NPH	DRAWING NO.
CHECKED BY: JHF	C-2
DATE: 6/2/18	

KELLARD SESSIONS
CONSULTING, P.C.

John Kellard, P.E.
David Sessions, RLA, AICP

MEMORANDUM

TO: Chairman Jerome Kerner, AIA and
Members of Lewisboro Planning Board

CC: Judson Siebert, Esq.

FROM: Jan K. Johannessen, AICP
Joseph M. Cermele, P.E., CFM
David J. Sessions, RLA, AICP
Town Consulting Professionals

DATE: December 14, 2016

RE: Wild Oaks Water System – Wells #4 and #6
Nash Road
Sheet 8, Block 11137, Lot 123

The subject property consists of ±1.8 acres of land, is located off of Nash Road within the R-4A Zoning District, and contains an existing pump house and a series of wells operated by New York American Water and servicing the Wild Oaks water system. In September of 2014, following review and referral by the Planning Board, an Administrative Wetland Permit (Wetland Permit #51-14 W.P.) was issued for the installation of two (2) bedrock test wells (Test Wells #4 and #5). These test wells were later approved by the Planning Board to be converted to active bedrock supply wells, with a condition that the applicant obtain approval from the Westchester County Department of Health (WCDH) and perform and report on the mandatory 72-hour pump test (see Resolution dated June 16, 2015 - Cal. #4-15 P.B. and #6-15 W.P.). Following the pump test, it was determined that the accumulation of these wells and associated output did not comply with Westchester County Department of Health (WCDH) permitting requirements and Well #5 was determined to be non-suitable.

The applicant than applied for a new test well (Test Well #6), which is proposed proximate to Test Well #4 and proximate to the wetland boundary. The Planning Board ultimately determined that Test Well #6 could be permitted administratively and approval for its installation was granted on October 13, 2015 via Wetland Permit #54-15 W.P. A pump test was than conducted for Well #6, which achieved a suitable yield. The applicant has now applied for a Wetland Permit and Site Development Plan Approval for the permanent installation of Wells #4 and #6 and their connection to the Wild Oaks Water System.

As stated above, we have been involved in the review of various components and phases of this project for several years and, while Well #5 is no longer part of the application, Wells #4 and #6 are in very close proximity to each other and the addition and connection of Well #6 to the pump house will result in no additional measurable impact when compared to the installation and connection of Well #4 alone (which was previously approved).

This office has no additional comments at this time. We note that the proposed action is a Type II Action and is categorically exempt from SEQRA and that the application requires a public hearing and referral to the Westchester County Planning Board under Section 239-m of the General Municipal Law (notification only).

Plans Reviewed, prepared by Leggette, Brashears & Graham, Inc.:

- Proposed Bedrock Test Well Location (Plate 1), dated August 26, 2015
- Blow-Up of Proposed Bedrock Test Well Location (Plate 2), dated August 26, 2015
- May 2015 Pumping Test Program, dated June 16, 2015 (Plate 1)
- Site Location Map, dated August 20, 2015 (Figure 1)

Documents Reviewed:

- Letter, prepared by Leggette, Brashears & Graham, Inc., dated August 28, 2015
- Wetland Permit Application
- Short Environmental Assessment Form, dated August 24, 2015
- Description of Activities – Bedrock Test Well Drilling
- Site Photographs
- *Wetland Delineation Report*, prepared by Hazen and Sawyer, dated July 2014
- *Application for Well Site Permit* Report, prepared by LBG, dated August 13, 2015
- *72-Hour Pumping Test Program Conducted on Wells 4 and 5, May 18 through May 30, 2015* Report, prepared by LBG, dated July 31, 2015

JKJ/JMC/DJS/dc

T:\Lewisboro\Correspondence\LW2088JJ-LWPB-WildOaksTestWells-Review-Memo-12-14-16.docx

Hazen and Sawyer
498 Seventh Avenue, 11th Floor
New York, NY 10018 • 123.345.8765

November 29, 2016

Ms. Ciorsdan Conran
Planning Board Secretary
Town of Lewisboro
20 North Salem Road
PO Box 725
Cross River, NY 10518

RE: New York American Water Wild Oaks Water System, Lewisboro, NY
Application for Site Development Permit and Wetland Activity Permit
Well #4 and Well #6
Block 11137, Lot 123, Sheet 8

Dear Ms. Conran:

Please find enclosed in this submittal an application package containing materials for Site Development Approval and a Wetland Activity Permit per the proposed plan outlined during the November 15, 2016 Planning Board Meeting. During this meeting, it was determined that New York American Water (NYAW) should apply for these approvals prior to the December Planning Board meeting in order to expedite compliance with the Town of Lewisboro and to complete the upgrades of the Wild Oaks Water System.

The Wild Oaks Water System is a small water system servicing approximately 610 customers in the Town of Lewisboro. Up until the summer of 2016, the drinking water in this system was supplied by two shallow sand and gravel wells (Well #1 and Well #2). Due to the age of these wells and the declining water quality, NYAW initiated a project in 2014 to drill two deep bedrock test wells with the intent of establishing new permanent drinking water supply wells. NYAW drilled these new test wells in January and May 2015 (Well #4 and Well #5, respectively). After pump testing was completed, only Well #4 achieved a suitable yield for a permanent well. Well #5 was therefore abandoned from all further plans. NYAW drilled a third well (Well #6) in May, 2016 and after pump testing, Well #6 did yield enough for a permanent well. Construction to establish Well #4 as a permanent well and connection with the existing treatment and distribution system began in October, 2016 (Attachment 6 – Sheet C1a).

In July 2016, drought conditions caused a drop in the surface water elevation of the two small ponds adjacent to the Wild Oaks wells. This resulted in a negative effect on Well #1 and Well #2, reducing their pumping volume and further reducing water quality. The filters on these wells had to be replaced weekly and water needed to be trucked into the Wild Oaks storage tank located on Fairmount Road. These emergency conditions prompted NYAW to seek emergency approval from New York State Department of Environmental Conservation (NYSDEC) and Westchester Department of Health (WCDOH) to utilize water from Well #4. After these approvals were granted, NYAW installed a temporary at grade connection to Well #4 and began using Well #4 water. Additional details can be found in the enclosed Project Description.

NYAW had previously been issued a Resolution by the Planning Board in June 2015 to convert the permitted test wells into permanent drinking water wells, however this Resolution lapsed prior to the emergency conditions that prompted the temporary connection of Well #4. Additionally, this Resolution only covered Well #4 and Well #5. This new application is intended to retroactively cover Well #4 and to grant permission for Well #6.

Hazen

To facilitate your review of this application, the following items are enclosed:

- Attachment 1. Site Plan Development 1 and 2 Application Forms and $710 Check;
- Attachment 2. Wetland Activity Permit Application Form and $255 Check;
- Attachment 3. Project Description;
- Attachment 4. Westchester County Affidavit of Ownership;
- Attachment 5. Tax Payment Affidavit;
- Attachment 6. Project Drawings;
- Attachment 7. Previous Approvals:
    - Attachment 7a. Cal. 51-14 W.P. Wetland Activity Permit for Wells #4 and #5;
    - Attachment 7b. Cal. 4-15 P.B. and Cal. 6-15 W.P: Expired Planning Board Resolution for Site Development Plan and Wetland Activity Permit;
    - Attachment 7c. Cal. 54-15 W.P. Wetland Activity Permit for Well #6;
    - Attachment 7d. U.S. Army Corps of Engineers Nationwide Permit 12 – Utility Line Activities;
    - Attachment 7e. New York State Historic Preservation Office Correspondence;
    - Attachment 7f. NYSDEC Emergency Authorization of Well 4;
- Attachment 8. Site Photographs;
- Attachment 9. Wetland Delineation Report;
- Attachment 10. Short Environmental Assessment Form;
- Attachment 11. Engineer's Report;
- Attachment 12. 72 Hour Pump Tests for Well #4, Well #5, and Well #6.

Should you have any questions or require additional information, please contact me at (212) 539-7074.

Very Truly Yours,

Kristen Barrett, P.E.
Senior Associate

cc: NYAW: Richard Ruge
H&S: Ross Diamond, David Braun

Hazen

Wild Oaks Water System
Lewisboro, NY
Description of Proposed Project

INTRODUCTION

New York American Water (NYAW) operates the Wild Oaks Water System, a drinking water system composed of two sand and gravel groundwater supply wells (Well 1 and Well 2) and on-site treatment that serves approximately 610 customers in Lewisboro, NY. The Wild Oaks Water System is located on Nash Road, on Sheet 8, Block 11137, Lot 123 of the Town of Lewisboro Tax Maps. In 2014, NYAW initiated a project to drill two deep bedrock test wells with the intent of establishing new permanent drinking water supply wells. NYAW drilled these new test wells in January and May, 2015 (Well #4 and Well #5, respectively) (**Attachment 7a**). After pump testing was completed, only Well 4 achieved a suitable yield for a permanent well. Well 5 was therefore abandoned from all further plans. NYAW drilled a third well (Well #6) in May, 2016 (**Attachment 7c**) and after pump testing (**Attachment 12**), Well #6 also yielded enough for a permanent well.

NYAW received a Resolution from the Town of Lewisboro Planning Board in June, 2015 (**Attachment 7b**) that would authorize the disturbance of wetland buffer area to make Wells #4 and #5 permanent by installing pipe in the ground that would connect the wells to the on-site treatment and distribution systems. NYAW planned to modify the original application for the Site Development Permit and Wetland Activity Permit to include Well #6 following the Well #6 pump testing. However, Well #6 took longer than anticipated (7-months) to drill due to unfavorable site conditions. NYAW did not request an extension to the Resolution, and therefore the Resolution was allowed to expire. The difference between the initial planning board submittal and this submittal is that Well #6 shares almost all the same infrastructure as Well #4 and as a result, there is less total disturbance to the site due to the proximity of Well #4 and Well #6 to one another.

In July, 2016, drought conditions caused a drop in the surface water elevation of two small ponds adjacent to the Wild Oaks wells. This resulted in a negative effect on Well #1 and Well #2, reducing their pumping volume and further reducing water quality. These emergency conditions prompted NYAW to seek emergency approval from New York State Department of Environmental Conservation (NYSDEC) and Westchester Department of Health (WCDOH) to utilize water from Well #4. After these approvals were granted (**Attachment 7f**), NYAW installed a temporary connection to Well #4 and began using Well #4 water.

NEED FOR THE PROPOSED PROJECT

New water supply wells are needed in the Wild Oaks Water System to replace the existing sand and gravel wells. The currently existing sand and gravel wells are approximately 40-feet deep. This shallow depth means the wells are directly influenced by surface water and runoff, which can transport contaminants from the surface due to the natural process of groundwater recharge. Replacement of these wells with bedrock wells will reduce the influence of surface water on the

water supply and increase the raw water quality in the system, increasing the quality and resilience of the water supply system.

In July 2016, low-precipitation conditions resulted in greatly reduced volume and quality of the water being pumped from Wells #1 and #2. Wells #1 and #2 have historically been known to be affected by drops in the surface water elevation, and they have been reconstructed in the past to attempt to address sedimentation in the water supply. However, the drought-like conditions in July, 2016 exacerbated the condition to levels not previously seen in the Wild Oaks Water System. To continue to operate the water system, the treatment system's 1 and 5-micron filters needed to be replaced every 1-2 days and the wells produced much less than their rated capacity and system demand. The water storage tank located on Fairmount Road had to be refilled with trucked-in water. Entrained air was observed in the water. New bedrock wells would alleviate these conditions and prevent them from occurring during future droughts.

The temporary connection to Well #4 is a hose that runs overland to the existing pump house may freeze during cold winter conditions since the well is not continuously pumped. Therefore, Well #4 will not be able to reliably pump water for the Wild Oaks Water System throughout the winter.

EXISTING CONDITIONS AT THE PROPOSED PROJECT SITE

The Wild Oaks Water System is currently accessed via a gravel road with a swing gate off of Nash Road in Lewisboro, NY close to the border with North Salem, NY (**Figure 1**). The gravel road crosses an unnamed stream and leads to the existing pump house, a small structure that receives water from two currently existing sand and gravel wells (**Attachment 6 – Sheet C1**). The pump house treats the water with cartridge filters, chlorine, and UV light before distributing it into the wider system. Two ponds are located on either side of the pump house, a small pond to the east and a larger pond to the west. Between the two ponds is a narrow strip of maintained land that is used to access other areas of the property.

Test Well #4 is located approximately 230 feet south from the existing pump house, within the maintained land between the two ponds. Test Well #6 is located approximately 10-feet west of Test Well #4 (**Attachment 6 – Sheet C1**). Prior to the construction of Well #4, the Wild Oaks Water System site had been historically disturbed, evidenced by remnant dumping, structures, culverts in the unnamed stream, power lines, and mowing.

Construction on Well #4 was initiated in October 2016 in response to the emergency conditions of Well #1 and Well #2. Silt fencing was installed along the strip of land between the two ponds and a trench that would hold the permanent iron piping was dug. This iron pipe that would connect Well #4 and Well #6 to the pump house was lain and the trench filled in. This pipe was also connected to the existing pump house. During this process Well #1 was decommissioned from service.

UNFINISHED CONSTRUCTION

To complete construction of Well #4 and Well #6, the following items need to be completed:

- A trench for the electrical and instrumental conduits that would enable the permanent operation of the wells would need to be dug. Only one trench for both wells is required (**Attachment 3 – Sheet C1a**).
- The utilities would need to be connected to equipment at the wells and at the well house.
- The pitless adapter for Well #6 would need to be completed. Pitless adapters enable the well pump discharge to connect to the transmission main below grade.
- The permanent pump for Well #6 would need to be installed and the cap cut and completed.
- The pitless adapter for Well #4 would need to be installed in conjunction with a temporary shutdown of pumping from Well #4.

Waters of the United States and New York State Department of Environmental Conservation Regulated Tidal Wetlands

The unnamed stream that runs through the Wild Oaks Water System property is a New York State Department of Environmental Conservation (NYSDEC) Class C stream. According to NYSDEC New York Code of Rules and Regulations (NYCRR) Part 701.8, "The best usage of Class C waters is fishing. These waters shall be suitable for fish, shellfish, and wildlife propagation and survival. The water quality shall be suitable for primary and secondary contact recreation, although other factors may limit the use for these purposes." The unnamed Class C stream flows east to west, running adjacent to the small pond and has inflows into and out of the larger pond (**Figure 2**). This stream will not be disturbed under the proposed project.

The NYSDEC Environmental Resources Mapper was consulted and there are no NYSDEC-regulated freshwater wetlands proximate to the Wild Oaks Water System, however, there is freshwater wetland checkzone in and around most of the Wild Oaks Water System property (**Figure 2**). A freshwater wetland checkzone is an area that NYSDEC suggests be checked for the presence of wetlands prior to any project to ensure that the proposed project does not encroach on any NYSDEC regulated wetlands or the regulated 100-foot buffer zone. United States Fish and Wildlife Service (USFWS) National Wetland Inventory (NWI) maps were also consulted for the presence of NWI wetlands in the vicinity of the proposed project. The two ponds on the site are classified as PubHh, or a Palustrine wetland with an unconsolidated bottom that is permanently flooded and is impounded (**Figure 2**).

On May 8th, 2014, a wetland delineation was performed within the NYSDEC checkzone areas proximate to the proposed project. The wetland delineation was conducted in accordance with the United States Army Corps of Engineers (USACE) Wetlands Delineation Manual (USACE, 1987) and the Regional Supplement to the Corps of Engineers Wetland Delineation Manual: Northcentral and Northeast Region (USACE, 2012). The results of the wetland delineation are shown in **Figure 3** and the complete wetland delineation report is provided in **Attachment 9**. Two freshwater wetlands were identified: Wetland A consists of a small 0.28 acre emergent

wetland. This wetland occurs at the fringe of the eastern and smaller approximately 0.44 acre freshwater pond. Together, they are an approximately 0.72 acre freshwater wetland. Wetland B is a 1.0+ acre forested floodplain wetland in the northern area of the Wild Oaks Water System property, adjacent to the bank of the unnamed Class C stream. Wetland B is outside of the proposed limits of disturbance for this project. The entirety of the remaining project area, including the existing pump house are within 150-feet of a wetland feature, and are thus considered within the regulated Town of Lewisboro 150-foot wetland buffer area.

IMPACTS FROM THE PROPOSED PROJECT AND PROPOSED RESTORATION

The proposed project will involve the temporary disturbance of approximately 0.041 acres of freshwater wetlands from the installation of the pipe trench. Approximately 0.056 acres of 150-foot wetland buffer area will be temporarily disturbed. No trees or woody vegetation will be removed. An electrical box near Well #4 and Well #6 will be installed. Additionally, both wells will have their wellheads present at the surface for access. There is no concrete associated with the wellheads. These appurtenances are necessary for the long term function and protection of the new wells. Each appurtenance will consist of the smallest possible footprint (<10 square feet total) and will not pose significant adverse impacts to wetland or wetland buffer function. At the end of the proposed project, all temporarily disturbed areas will be restored to pre-construction conditions. No equipment, erosion controls, wetland matting, or debris will be left in the wetland or wetland buffer area. Temporarily disturbed freshwater wetland areas will be seeded with a native wetland seed mix (**Attachment 6 – Sheet C2**).

ALTERNATIVES ANALYSIS

The No-Action alternative to this project consisted of not constructing the bedrock wells and continuing to rely on currently operational sand and gravel groundwater wells. This alternative is not considered viable, as the reliability of these shallow sand and gravel wells has declined with time and more frequent summer droughts would result in more frequent emergency conditions.

Alternative B to this project would be to find another suitable location for bedrock wells on the Wild Oaks property. This alternative was not pursued because all other locations on Wild Oaks Property would require more extensive disturbance to either one of the ponds or to the unnamed Class C stream running through the property. Alternative alignments for the proposed pipe also were considered, such as turning the pipe westward to avoid the delineated wetland boundary. This alignment was not pursued because there is mature shrubby vegetation along the bank of the large pond. This shrubby vegetation would have to be disturbed or removed to accommodate the machinery required for installation of the proposed pipe. Disturbance to this vegetation could cause disturbance to the bank of the freshwater pond and cause erosion. Additionally, the mature shrubby vegetation is providing ecological benefits such as food and cover for wildlife. The freshwater wetland where the pipe is proposed is currently disturbed and mowed, limiting its ecological function.

SEDIMENT AND EROSION CONTROL MEASURES

All construction activities would be subject to and performed in accordance with NYSDEC's technical standards for erosion and sediment control (e.g., utilizing silt fences and hay bales). Silt fencing will be erected around the limits of disturbance so as to minimize any sediment transport to either of the ponds or the unnamed Class C stream. If dewatering is required for any part of the trenching then an approved method such as a filter bag or settling tank will be utilized. Native soils that are cut for pipe trenching will be re-used as fill.

REGULATORY APPROVALS REQUIRED FOR THE PROPOSED PROJECT

U.S. ARMY CORPS OF ENGINEERS NATIONWIDE PERMIT PROGRAM

Nationwide Permit 12 – Utility Line Activities

The construction of the Wild Oaks Water System Well #4 and Well #6 would be covered under Nationwide Permit 12 – Utility Line Activities, which authorizes "the construction, maintenance, or repair of utility lines, including outfall and intake structures, and the associated excavation, backfill, or bedding for the utility lines, in all waters of the United States, provided there is no change in pre-construction contours." The utility line for the proposed project would be a 4-inch diameter RJDI pipe to convey drinking water. Nationwide Permit 12 also states that in wetlands, material removed within the top 6-12 inches should be backfilled into the trench. The proposed project would comply with this permit condition.

The project was also reviewed for consistency with proposed changes to Nationwide Permit 12 that USACE anticipates to issue in 2017. No proposed changes to Nationwide Permit 12 would affect the activities for this project, therefore this project would continue to be authorized under Nationwide Permit 12 and no further coordination with USACE is required.

As per the NYSDEC document entitled "Water Quality Certification for the 2012 Nationwide Permits (NWPs)" which became effective March 19, 2012, Nationwide Permit 12 – Utility Line Activities is granted blanket 401 Water Quality Certification as long as the NWP General Conditions and the following Special Condition are adhered to:

> "Materials resulting from trench excavation that are temporarily sidecast into waters of the United States must be used to backfill the trench or removed within 30 days of deposition."

The proposed project would comply with all General and Special Conditions. Therefore, the proposed project will meet the conditions for blanket 401 Water Quality Certification.

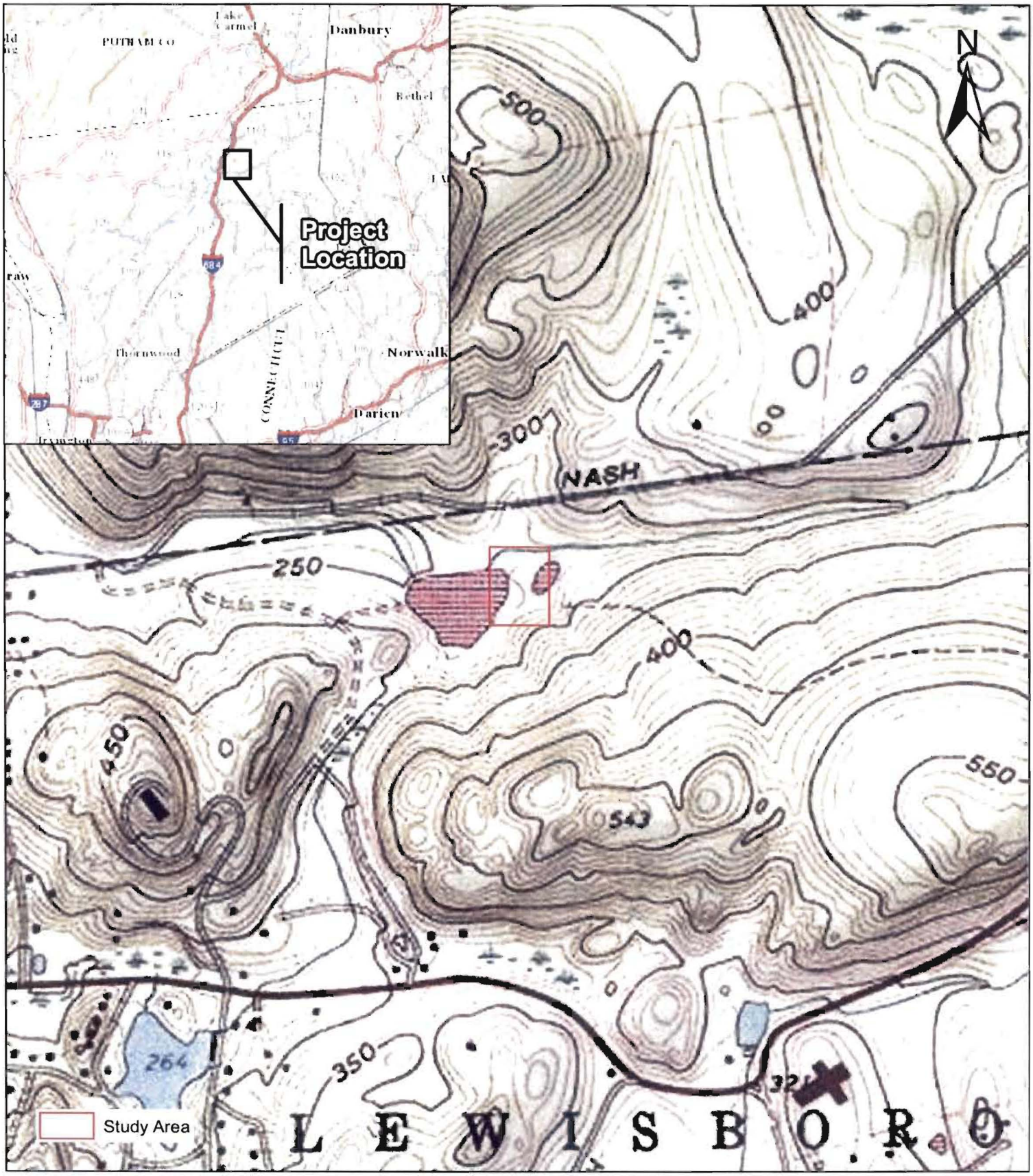

SCALE
0 400 800 1,200 1,600 Feet

USGS Croton Falls
Figure 1

HAZEN AND SAWYER
Environmental Engineers & Scientists

Wild Oaks Water System
Town of Lewisboro Wetland Activity

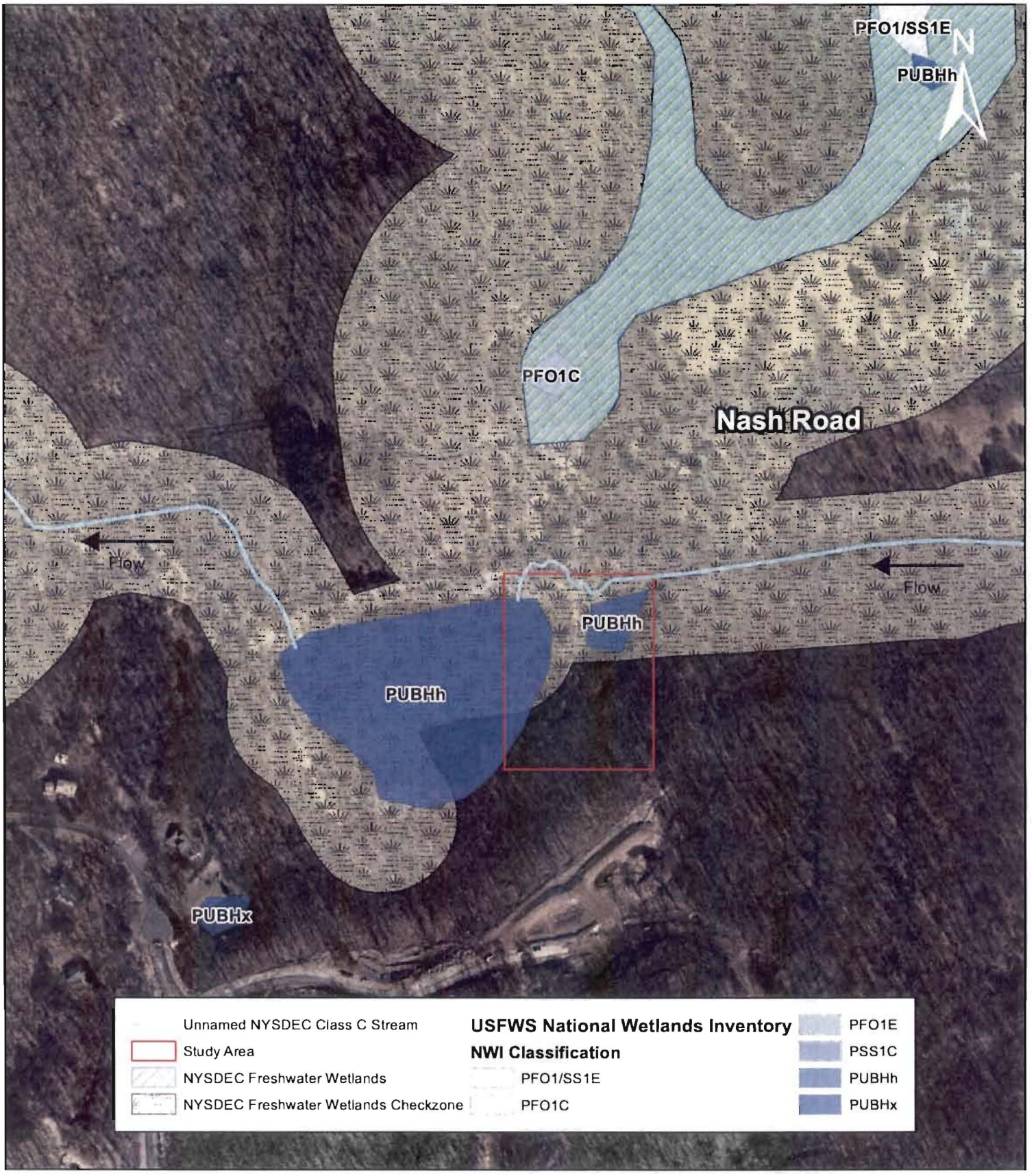

SCALE
0 160 320 480 640 Feet

NYSDEC Classifed Surface Waters, NYSDEC Freshwater Wetlands Checkzone, and USFWS NWI
Figure 2

HAZEN AND SAWYER
Environmental Engineers & Scientists

Wild Oaks Water System
Town of Lewisboro Wetland Activity

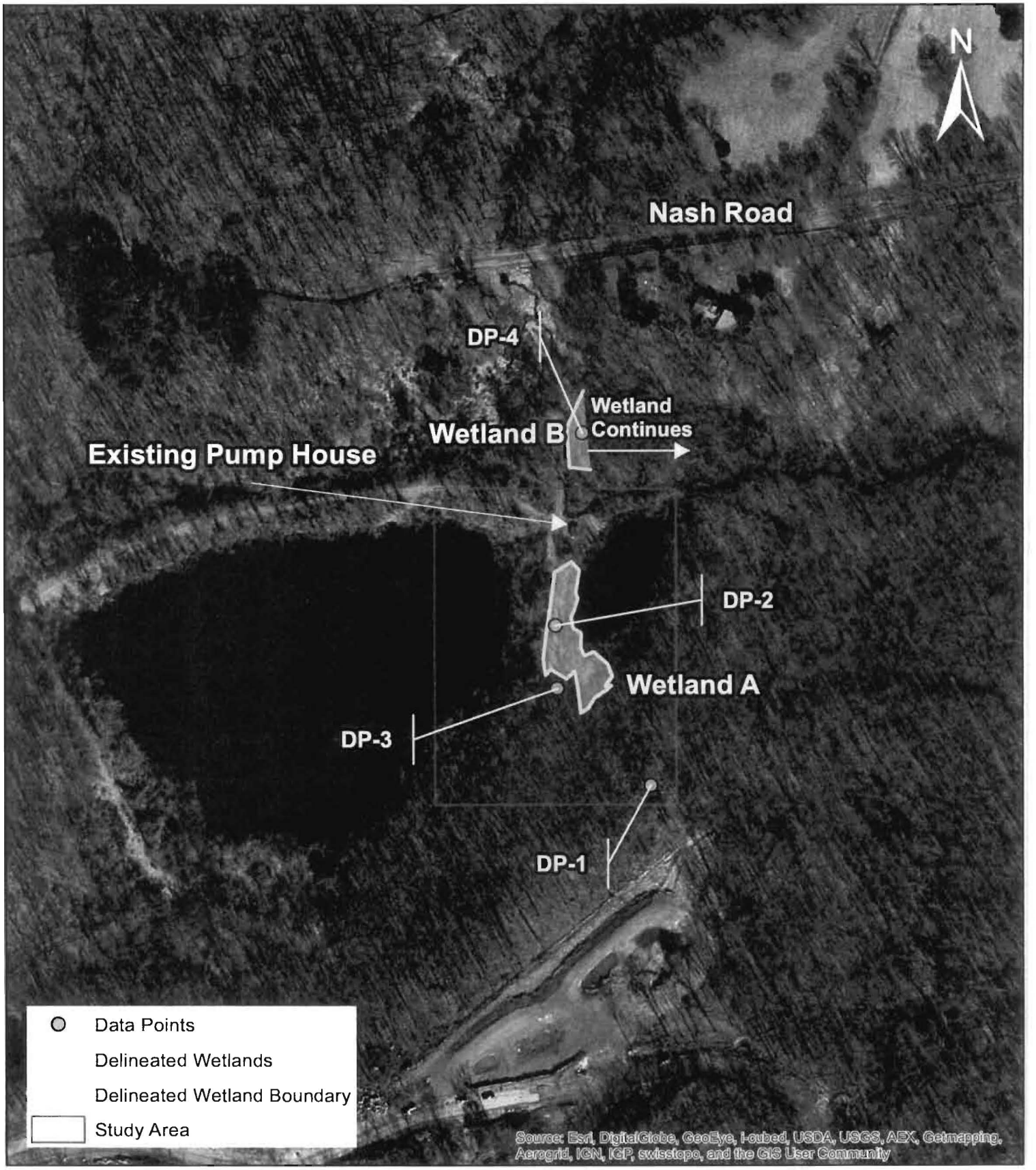

SCALE

0 90 180 270 360 Feet

Wetland Delineation
Figure 3

HAZEN AND SAWYER
Environmental Engineers & Scientists

Wild Oaks Water System
Town of Lewisboro Wetland Activity

WILD OAKS WATER SYSTEM

Town of Lewisboro Site Development and Wetland Activity Permit Application for Well #4 and Well #6

Attachment 1
Site Plan Development 1 and 2 Application Forms and $710 Check

TOWN OF LEWISBORO PLANNING BOARD

P. O. Box 725, Cross River, New York 10518 TEL (914) 763-5592 / FAX (914) 763-3637
e-mail planning@lewisborogov.com

STEP 1: APPLICATION FOR SKETCH PLAN REVIEW

application type (check one) SITE DEVELOPMENT PLAN __X__ SPECIAL PERMIT _____

Wild Oaks Water System — R4-A
project name — zoning district

Nash Road — 8 — 11137 — 123
site location — tax sheet — block — lot

1.88 site acreage — Is the site located within 500 FT of any Town boundary? YES X NO ____

NA existing gross floor area — Is the site located within the New York City Watershed? YES X NO ____

NA proposed gross floor area — Is the site located on a State of County Highway? Route #____ YES ____ NO X

Hazen and Sawyer — 498 7th Avenue, 11th Floor, New York, NY 10018 — (212) 539-7000
engineer's name — address — phone

Kirk Rother — 5 Saint Stephens Lane, Warwick, NY 10990 — (845) 988-0620
surveyor's name — address — phone

ALL SUBMITTED PLANS AND DOCUMENTS SHALL BEAR AN ORIGINAL SIGNATURE, SEAL AND LICENSE NUMBER OF THE PROFESSIONAL RESPONSIBLE FOR PREPARING EACH ITEM

ALL PLANS SHALL BE EQUAL IN SHEET SIZE, COLLATED INTO STAPLED FOLDED SETS. ~~THIRTEEN (13)~~ COMPLETE SETS ARE REQUIRED. ~~(Except Communication Facilities require 18 sets.)~~
* Ten 10 * Original plus 9 copies

THE FOLLOWING MATERIALS SHALL BE ATTACHED:

SKETCH PLAN per Section 220-45 (Site Development Plan) or Section 220-32 (Special Permit) of the Zoning Ordinance.
WRITTEN NARRATIVE describing the environmental character, physical features and scope of the proposed action.
ADDENDUM SITE DATA FORM attach completed Site Data Form to this application.
COMPLETED AFFIDAVIT OF OWNERSHIP FORM certifying owner of record as of date of the application.
COMPLETED AFFIDAVIT FROM RECEIVER OF TAXES certifying payment of all taxes and assessments due.
FILING FEE: See attached Application Fee Schedule. Check(s) are payable to: *Town of Lewisboro.*
INITIAL ESCROW DEPOSIT payable to: *TOWN OF LEWISBORO* (see Planning Board Secretary).

SUGGESTED:
SKETCH CONSTRUCTION PLANS, PROFILES AND DETAILS.
TOPOGRAPHIC SURVEY showing two-foot contour intervals.
WETLAND DELINEATION per Chapter 217 Wetlands and Watercourse Law, with NYSDEC endorsement where appropriate.

THE APPLICANT understands that any application is considered complete only when all information and documents required have been Submitted and received by the Planning Board and further understands that the applicant is responsible for the payment of all application and Review fees incurred by the Planning Board.
THE UNDERSIGEND WARRANTS the truth of all statements contained herein and in all supporting documents according to the best of his or her knowledge and belief and authorizes visitation and inspection of the subject property by the Town of Lewisboro and its agents.

(914) 835-2581

Richard Ruge — 260 Harrison Avenue, Harrison, NY 10528 — Richard Ruge — 11/22/16
applicant's name — address — phone — signature — date

New York American Water — 260 Harrison Avenue, Harrison, NY 10528
owner's name — address — phone — signature — date

Date of receipt by Planning Board Secretary_____ Application ID: SDP#_____ or SP#_____

TOWN OF LEWISBORO PLANNING BOARD

P. O. Box 725, Cross River, New York 10518 TEL (914) 763-5592 / FAX (914) 763-3637
e-mail planning@lewisborogov.com

STEP II: APPLICATION FOR SITE DEVELOPMENT PLAN APPROVAL

Wild Oaks Water System — R4-A
project name — zoning district

Nash Road — 8 — 11137 — 123
site location — tax sheet — block — lot

1.88 site acreage — Is the site located within 500 FT of any Town boundary? YES x NO ____

NA existing gross floor area — Is the site located within the New York City Watershed? YES x NO ____

NA proposed gross floor area — Is the site located on a State of County Highway? Route #____ YES ____ NO x

Hazen and Sawyer — 498 7th Avenue, 11th Floor, New York, NY 10018 — (212) 539-7000
engineer's name — address — phone

Kirk Rother — 5 Saint Stephens Lane, Warwick, NY 10990 — (845) 988-0620
surveyor's name — address — phone

ALL SUBMITTED PLANS AND DOCUMENTS SHALL BEAR AN ORIGINAL SIGNATURE, SEAL, AND LICENSE NUMBER OF THE PROFESSIONAL RESPONSIBLE FOR PREPARING EACH ITEM. ALL PLANS SHALL BE EQUAL IN SHEET SIZE, COLLATED INTO STAPLED AND FOLDES SETS. AN ORIGINAL AND NINE (9) COPIES OF ALL DOCUMENTS ARE REQUIRED – TEN (10) COMPLETEDSETS..

THE FOLLOWING MATERIALS SHALL BE ATTACHED:

- ☒ **SITE DEVELOPMENT PLAN per Section 220-46 of the Zoning Ordinance.**
- ☒ **SUPPORTING CONSTRUCTION PLANS, PROFILES AND DETAILS per Section 220-46 of the Zoning Ordinance.**
- ☒ **WRITTEN NARRATIVE describing the environmental character, physical features and scope of the proposed action.**
- NA **ADDENDUM SITE DATA FORM attach completed Site Data Form to this application form.**
- ☒ **TOPOGRAPHIC SURVEY showing 2-foot contour intervals.**
- ☒ **WETLAND DELINEATION per chapter 217 Wetlands and Watercourses Law, with NYSDEC endorsement where appropriate.**
- ☒ **WETLAND ACTIVITY PERMIT APPLICATION FORM complete if any wetlands /150- buffer activity is proposed.**
- ☒ **SEQR ENVIRONMENTAL ASSESSMENT FORM.**
- ☒ **COMPLETED AFFIDAVIT OF OWNERSHIP FORM certifying owner of record as of date of the application.**
- ☒ **COMPLETED AFFIDAVIT FROM RECEIVER OF TAXES certifying payment of all taxes and assessments due.**
- ☒ **FILING FEE: See attached Application Fee Schedule. Check(s) are payable to *Town of Lewisboro*.**

THE APPLICANT understands that any application is considered complete only when all information and documents required have been Submitted and received by the Planning Board and further understands that the applicant is responsible for the payment of all application and Review fees incurred by the Planning Board.
THE UNDERSIGEND WARRANTS the truth of all statements contained herein and in all supporting documents according to the best of his or her knowledge and belief and authorizes visitation and inspection of the subject property by the Town of Lewisboro and its agents.

Richard Ruge — 260 Harrison Avenue, Harrison, NY 10528 — ~~(516) 596-4860~~ 914 835-2581 — Richard Ruge — 11/22/16
applicant's name — address — phone — signature — date

New York American Water — 260 Harrison Avenue, Harrison, NY 10528 — ~~(516) 596-4860~~ (914) 835-2581
owner's name — address — phone — signature — date

Date of receipt by Planning Board Secretary_____ Application ID: SDP# _____

WILD OAKS WATER SYSTEM

Town of Lewisboro Site Development and Wetland Activity Permit Application for Well #4 and Well #6

Attachment 2
Wetland Activity Permit Application Form and $255 Check

Application No.:_____
Fee:_____ Date:_____

TOWN OF LEWISBORO
WETLAND PERMIT APPLICATION

Town Offices @ Orchard Square, Suite L (Lower Level), 20 North Salem Road, Cross River, NY 10518
Phone: (914) 763-3060
Fax: (914)533-0097

Project Information

Project Address: Nash Road

Sheet: 8 Block: 11137 Lot(s): 123

Project Description (identify the improvements proposed within the wetland/wetland buffer and the approximate amount of wetland/wetland buffer disturbance): See Attached Project Description

Owner's Information

Owner's Name: New York American Water Phone: ~~(516) 596-4860~~ (914) 835-2581

Owner's Address: 260 Harrison Avenue, Harrison, NY 10528 Email: richard.ruge@amwater.com

Applicant's Information (if different)

Applicant's Name:_____ Phone:_____

Applicant's Address:_____ Email:_____

Authorized Agent's Information (if applicable)

Agent's Name: Kristen Barrett Phone: (212) 539-7000

Agent's Adress: 498 7th Ave 11th Floor, New York, NY 10018 Email: kbarrett@hazenandsawyer.com

To Be Completed By Owner/Applicant

1. What type of Wetland Permit is required? (see §217-5C and §217-5D of the Town Code)

   ☐ Administrative ☒ Planning Board

2. Is the project located within the NYCDEP Watershed? ☒ Yes ☐ No

3. Total area of proposed disturbance: ☒ < 5,000 s.f. ☐ 5,000 s.f. - < 1 acre ☐ ≥1 acre

4. Does the proposed action require any other permits/approvals from other agencies/departments? (Planning Board, Town Board, Zoning Board of Appeals, Building Department, Town Highway, ACARC, NYSDEC, NYCDEP, WCDOH, NYSDOT, etc): Identify all other permits/approvals required: WCDOH, USACE

Note: Initially, all applications shall be submitted with a plan that illustrates the existing conditions and proposed improvements. Said plan must include a line which encircles the total area of proposed land disturbance and the approximate area of disturbance must be calculated (square feet). The Planning Board and/or Town Wetland Inspector may require additional materials, information, reports and plans, as determined necessary, to review and evaluate the proposed action. If the proposed action requires a Planning Board Wetland Permit, the application materials outlined under §217-7 of the Town Code must be submitted, unless waived by the Planning Board. The Planning Board may establish an initial escrow deposit to cover the cost of application/plan review and inspections conducted by the Town's consultants.

For administrative wetland permits, see attached Administrative Wetland Permit Fee Schedule.

Owner/Applicant Signature: Richard A. Ruge Manager, Field Ops Date: 11/22/16

WILD OAKS WATER SYSTEM

Town of Lewisboro Site Development and Wetland Activity Permit Application for Well #4 and Well #6

Attachment 3

Project Description

Hazen

Wild Oaks Water System
Lewisboro, NY
Description of Proposed Project

INTRODUCTION

New York American Water (NYAW) operates the Wild Oaks Water System, a drinking water system composed of two sand and gravel groundwater supply wells (Well 1 and Well 2) and on-site treatment that serves approximately 610 customers in Lewisboro, NY. The Wild Oaks Water System is located on Nash Road, on Sheet 8, Block 11137, Lot 123 of the Town of Lewisboro Tax Maps. In 2014, NYAW initiated a project to drill two deep bedrock test wells with the intent of establishing new permanent drinking water supply wells. NYAW drilled these new test wells in January and May, 2015 (Well #4 and Well #5, respectively) (**Attachment 7a**). After pump testing was completed, only Well 4 achieved a suitable yield for a permanent well. Well 5 was therefore abandoned from all further plans. NYAW drilled a third well (Well #6) in May, 2016 (**Attachment 7c**) and after pump testing (**Attachment 12**), Well #6 also yielded enough for a permanent well.

NYAW received a Resolution from the Town of Lewisboro Planning Board in June, 2015 (**Attachment 7b**) that would authorize the disturbance of wetland buffer area to make Wells #4 and #5 permanent by installing pipe in the ground that would connect the wells to the on-site treatment and distribution systems. NYAW planned to modify the original application for the Site Development Permit and Wetland Activity Permit to include Well #6 following the Well #6 pump testing. However, Well #6 took longer than anticipated (7-months) to drill due to unfavorable site conditions. NYAW did not request an extension to the Resolution, and therefore the Resolution was allowed to expire. The difference between the initial planning board submittal and this submittal is that Well #6 shares almost all the same infrastructure as Well #4 and as a result, there is less total disturbance to the site due to the proximity of Well #4 and Well #6 to one another.

In July, 2016, drought conditions caused a drop in the surface water elevation of two small ponds adjacent to the Wild Oaks wells. This resulted in a negative effect on Well #1 and Well #2, reducing their pumping volume and further reducing water quality. These emergency conditions prompted NYAW to seek emergency approval from New York State Department of Environmental Conservation (NYSDEC) and Westchester Department of Health (WCDOH) to utilize water from Well #4. After these approvals were granted (**Attachment 7f**), NYAW installed a temporary connection to Well #4 and began using Well #4 water.

NEED FOR THE PROPOSED PROJECT

New water supply wells are needed in the Wild Oaks Water System to replace the existing sand and gravel wells. The currently existing sand and gravel wells are approximately 40-feet deep. This shallow depth means the wells are directly influenced by surface water and runoff, which can transport contaminants from the surface due to the natural process of groundwater recharge. Replacement of these wells with bedrock wells will reduce the influence of surface water on the

water supply and increase the raw water quality in the system, increasing the quality and resilience of the water supply system.

In July 2016, low-precipitation conditions resulted in greatly reduced volume and quality of the water being pumped from Wells #1 and #2. Wells #1 and #2 have historically been known to be affected by drops in the surface water elevation, and they have been reconstructed in the past to attempt to address sedimentation in the water supply. However, the drought-like conditions in July, 2016 exacerbated the condition to levels not previously seen in the Wild Oaks Water System. To continue to operate the water system, the treatment system's 1 and 5-micron filters needed to be replaced every 1-2 days and the wells produced much less than their rated capacity and system demand. The water storage tank located on Fairmount Road had to be refilled with trucked-in water. Entrained air was observed in the water. New bedrock wells would alleviate these conditions and prevent them from occurring during future droughts.

The temporary connection to Well #4 is a hose that runs overland to the existing pump house may freeze during cold winter conditions since the well is not continuously pumped. Therefore, Well #4 will not be able to reliably pump water for the Wild Oaks Water System throughout the winter.

EXISTING CONDITIONS AT THE PROPOSED PROJECT SITE

The Wild Oaks Water System is currently accessed via a gravel road with a swing gate off of Nash Road in Lewisboro, NY close to the border with North Salem, NY (**Figure 1**). The gravel road crosses an unnamed stream and leads to the existing pump house, a small structure that receives water from two currently existing sand and gravel wells (**Attachment 6 – Sheet C1**). The pump house treats the water with cartridge filters, chlorine, and UV light before distributing it into the wider system. Two ponds are located on either side of the pump house, a small pond to the east and a larger pond to the west. Between the two ponds is a narrow strip of maintained land that is used to access other areas of the property.

Test Well #4 is located approximately 230 feet south from the existing pump house, within the maintained land between the two ponds. Test Well #6 is located approximately 10-feet west of Test Well #4 (**Attachment 6 – Sheet C1**). Prior to the construction of Well #4, the Wild Oaks Water System site had been historically disturbed, evidenced by remnant dumping, structures, culverts in the unnamed stream, power lines, and mowing.

Construction on Well #4 was initiated in October 2016 in response to the emergency conditions of Well #1 and Well #2. Silt fencing was installed along the strip of land between the two ponds and a trench that would hold the permanent iron piping was dug. This iron pipe that would connect Well #4 and Well #6 to the pump house was lain and the trench filled in. This pipe was also connected to the existing pump house. During this process Well #1 was decommissioned from service.

UNFINISHED CONSTRUCTION

To complete construction of Well #4 and Well #6, the following items need to be completed:

- A trench for the electrical and instrumental conduits that would enable the permanent operation of the wells would need to be dug. Only one trench for both wells is required (**Attachment 3 – Sheet C1a**).
- The utilities would need to be connected to equipment at the wells and at the well house.
- The pitless adapter for Well #6 would need to be completed. Pitless adapters enable the well pump discharge to connect to the transmission main below grade.
- The permanent pump for Well #6 would need to be installed and the cap cut and completed.
- The pitless adapter for Well #4 would need to be installed in conjunction with a temporary shutdown of pumping from Well #4.

Waters of the United States and New York State Department of Environmental Conservation Regulated Tidal Wetlands

The unnamed stream that runs through the Wild Oaks Water System property is a New York State Department of Environmental Conservation (NYSDEC) Class C stream. According to NYSDEC New York Code of Rules and Regulations (NYCRR) Part 701.8, "The best usage of Class C waters is fishing. These waters shall be suitable for fish, shellfish, and wildlife propagation and survival. The water quality shall be suitable for primary and secondary contact recreation, although other factors may limit the use for these purposes." The unnamed Class C stream flows east to west, running adjacent to the small pond and has inflows into and out of the larger pond (**Figure 2**). This stream will not be disturbed under the proposed project.

The NYSDEC Environmental Resources Mapper was consulted and there are no NYSDEC-regulated freshwater wetlands proximate to the Wild Oaks Water System, however, there is freshwater wetland checkzone in and around most of the Wild Oaks Water System property (**Figure 2**). A freshwater wetland checkzone is an area that NYSDEC suggests be checked for the presence of wetlands prior to any project to ensure that the proposed project does not encroach on any NYSDEC regulated wetlands or the regulated 100-foot buffer zone. United States Fish and Wildlife Service (USFWS) National Wetland Inventory (NWI) maps were also consulted for the presence of NWI wetlands in the vicinity of the proposed project. The two ponds on the site are classified as PubHh, or a Palustrine wetland with an unconsolidated bottom that is permanently flooded and is impounded (**Figure 2**).

On May 8th, 2014, a wetland delineation was performed within the NYSDEC checkzone areas proximate to the proposed project. The wetland delineation was conducted in accordance with the United States Army Corps of Engineers (USACE) Wetlands Delineation Manual (USACE, 1987) and the Regional Supplement to the Corps of Engineers Wetland Delineation Manual: Northcentral and Northeast Region (USACE, 2012). The results of the wetland delineation are shown in **Figure 3** and the complete wetland delineation report is provided in **Attachment 9**. Two freshwater wetlands were identified: Wetland A consists of a small 0.28 acre emergent

wetland. This wetland occurs at the fringe of the eastern and smaller approximately 0.44 acre freshwater pond. Together, they are an approximately 0.72 acre freshwater wetland. Wetland B is a 1.0+ acre forested floodplain wetland in the northern area of the Wild Oaks Water System property, adjacent to the bank of the unnamed Class C stream. Wetland B is outside of the proposed limits of disturbance for this project. The entirety of the remaining project area, including the existing pump house are within 150-feet of a wetland feature, and are thus considered within the regulated Town of Lewisboro 150-foot wetland buffer area.

IMPACTS FROM THE PROPOSED PROJECT AND PROPOSED RESTORATION

The proposed project will involve the temporary disturbance of approximately 0.041 acres of freshwater wetlands from the installation of the pipe trench. Approximately 0.056 acres of 150-foot wetland buffer area will be temporarily disturbed. No trees or woody vegetation will be removed. An electrical box near Well #4 and Well #6 will be installed. Additionally, both wells will have their wellheads present at the surface for access. There is no concrete associated with the wellheads. These appurtenances are necessary for the long term function and protection of the new wells. Each appurtenance will consist of the smallest possible footprint (<10 square feet total) and will not pose significant adverse impacts to wetland or wetland buffer function. At the end of the proposed project, all temporarily disturbed areas will be restored to pre-construction conditions. No equipment, erosion controls, wetland matting, or debris will be left in the wetland or wetland buffer area. Temporarily disturbed freshwater wetland areas will be seeded with a native wetland seed mix (**Attachment 6 – Sheet C2**).

ALTERNATIVES ANALYSIS

The No-Action alternative to this project consisted of not constructing the bedrock wells and continuing to rely on currently operational sand and gravel groundwater wells. This alternative is not considered viable, as the reliability of these shallow sand and gravel wells has declined with time and more frequent summer droughts would result in more frequent emergency conditions.

Alternative B to this project would be to find another suitable location for bedrock wells on the Wild Oaks property. This alternative was not pursued because all other locations on Wild Oaks Property would require more extensive disturbance to either one of the ponds or to the unnamed Class C stream running through the property. Alternative alignments for the proposed pipe also were considered, such as turning the pipe westward to avoid the delineated wetland boundary. This alignment was not pursued because there is mature shrubby vegetation along the bank of the large pond. This shrubby vegetation would have to be disturbed or removed to accommodate the machinery required for installation of the proposed pipe. Disturbance to this vegetation could cause disturbance to the bank of the freshwater pond and cause erosion. Additionally, the mature shrubby vegetation is providing ecological benefits such as food and cover for wildlife. The freshwater wetland where the pipe is proposed is currently disturbed and mowed, limiting its ecological function.

SEDIMENT AND EROSION CONTROL MEASURES

All construction activities would be subject to and performed in accordance with NYSDEC's technical standards for erosion and sediment control (e.g., utilizing silt fences and hay bales). Silt fencing will be erected around the limits of disturbance so as to minimize any sediment transport to either of the ponds or the unnamed Class C stream. If dewatering is required for any part of the trenching then an approved method such as a filter bag or settling tank will be utilized. Native soils that are cut for pipe trenching will be re-used as fill.

REGULATORY APPROVALS REQUIRED FOR THE PROPOSED PROJECT

U.S. ARMY CORPS OF ENGINEERS NATIONWIDE PERMIT PROGRAM

Nationwide Permit 12 – Utility Line Activities

The construction of the Wild Oaks Water System Well #4 and Well #6 would be covered under Nationwide Permit 12 – Utility Line Activities, which authorizes "the construction, maintenance, or repair of utility lines, including outfall and intake structures, and the associated excavation, backfill, or bedding for the utility lines, in all waters of the United States, provided there is no change in pre-construction contours." The utility line for the proposed project would be a 4-inch diameter RJDI pipe to convey drinking water. Nationwide Permit 12 also states that in wetlands, material removed within the top 6-12 inches should be backfilled into the trench. The proposed project would comply with this permit condition.

The project was also reviewed for consistency with proposed changes to Nationwide Permit 12 that USACE anticipates to issue in 2017. No proposed changes to Nationwide Permit 12 would affect the activities for this project, therefore this project would continue to be authorized under Nationwide Permit 12 and no further coordination with USACE is required.

As per the NYSDEC document entitled "Water Quality Certification for the 2012 Nationwide Permits (NWPs)" which became effective March 19, 2012, Nationwide Permit 12 – Utility Line Activities is granted blanket 401 Water Quality Certification as long as the NWP General Conditions and the following Special Condition are adhered to:

> "Materials resulting from trench excavation that are temporarily sidecast into waters of the United States must be used to backfill the trench or removed within 30 days of deposition."

The proposed project would comply with all General and Special Conditions. Therefore, the proposed project will meet the conditions for blanket 401 Water Quality Certification.

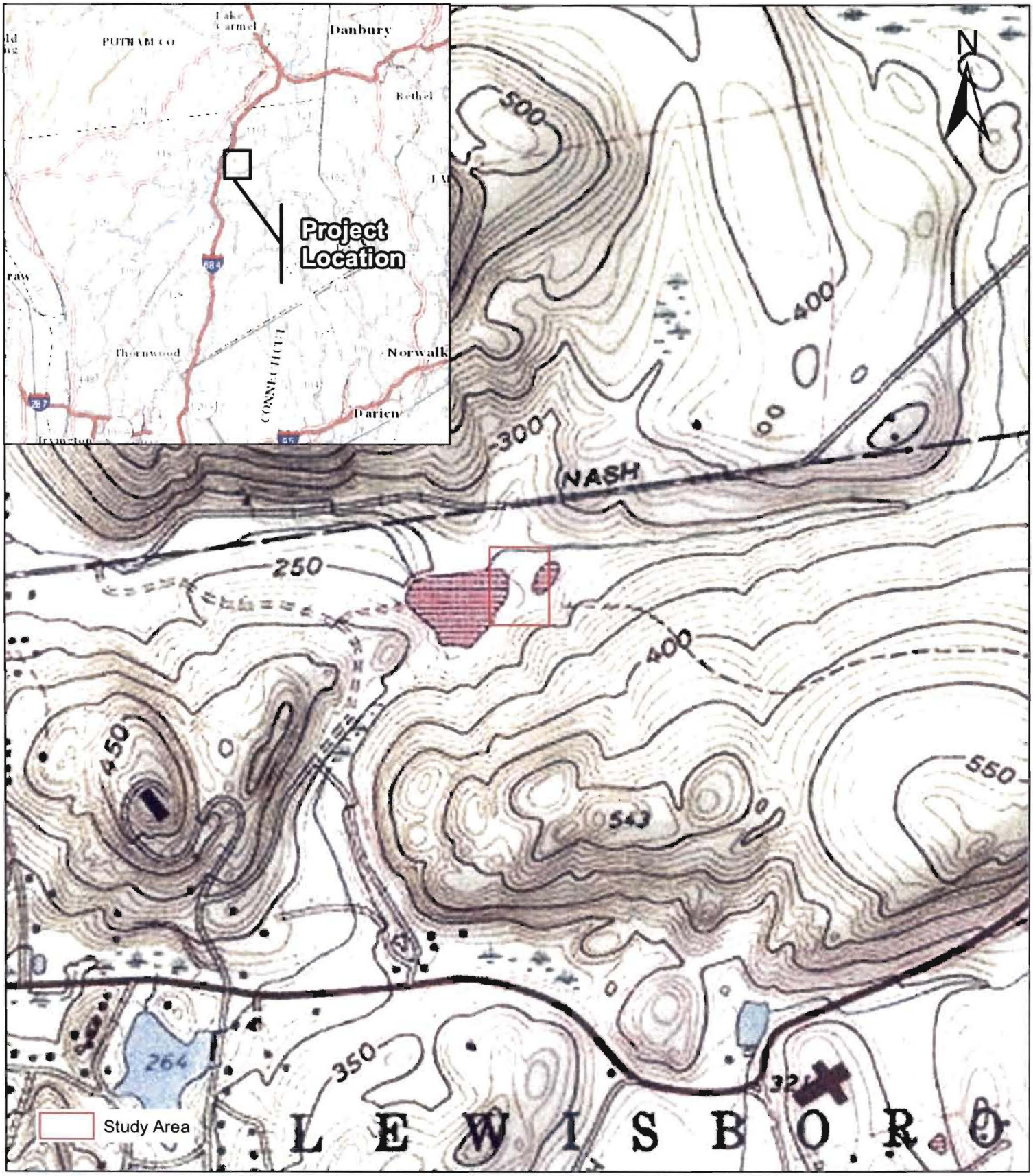

SCALE
0 400 800 1,200 1,600 Feet

USGS Croton Falls
Figure 1

HAZEN AND SAWYER
Environmental Engineers & Scientists

Wild Oaks Water System
Town of Lewisboro Wetland Activity

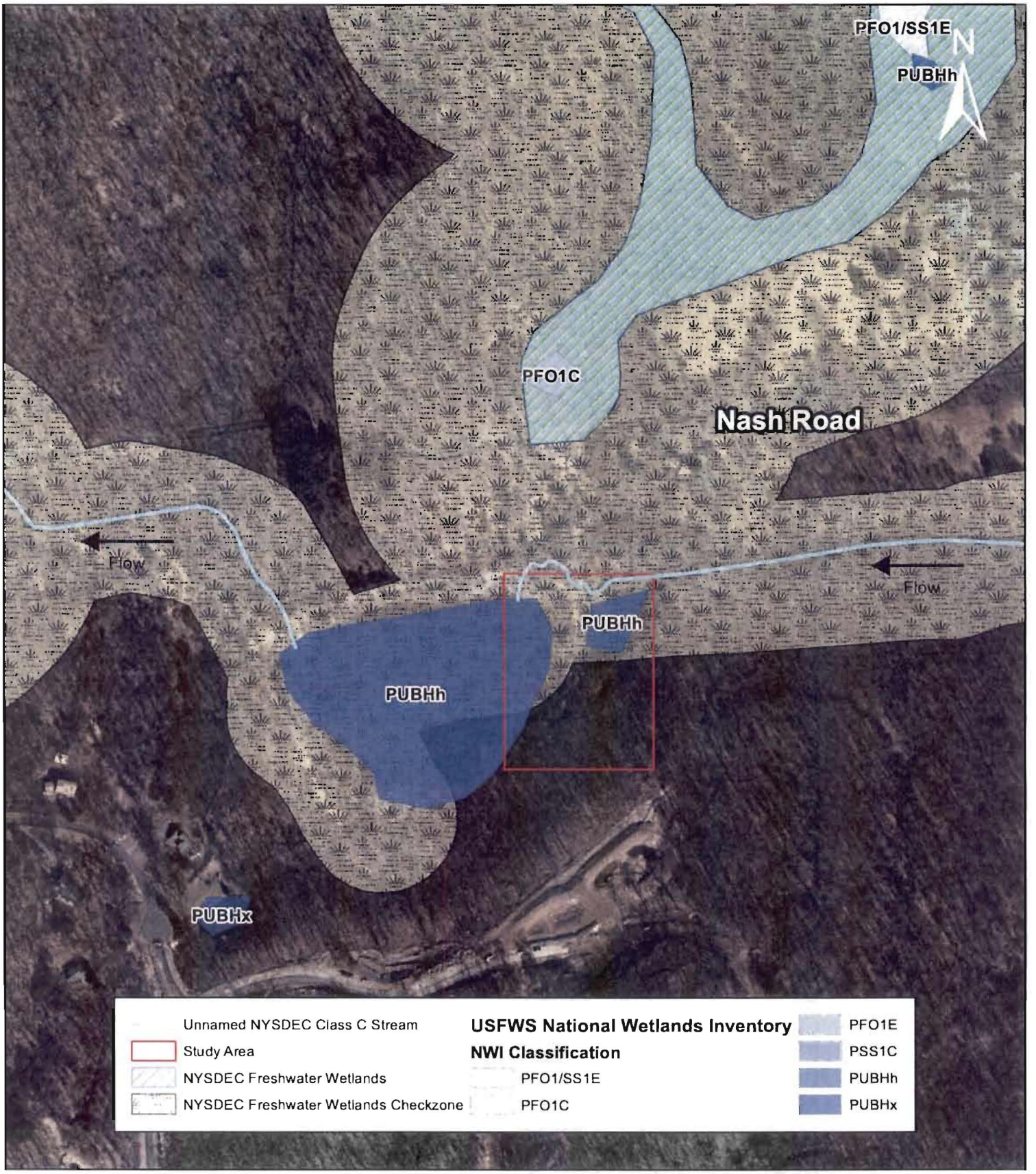

SCALE
0 160 320 480 640 Feet

NYSDEC Classifed Surface Waters, NYSDEC Freshwater Wetlands Checkzone, and USFWS NWI
Figure 2

HAZEN AND SAWYER
Environmental Engineers & Scientists

Wild Oaks Water System
Town of Lewisboro Wetland Activity

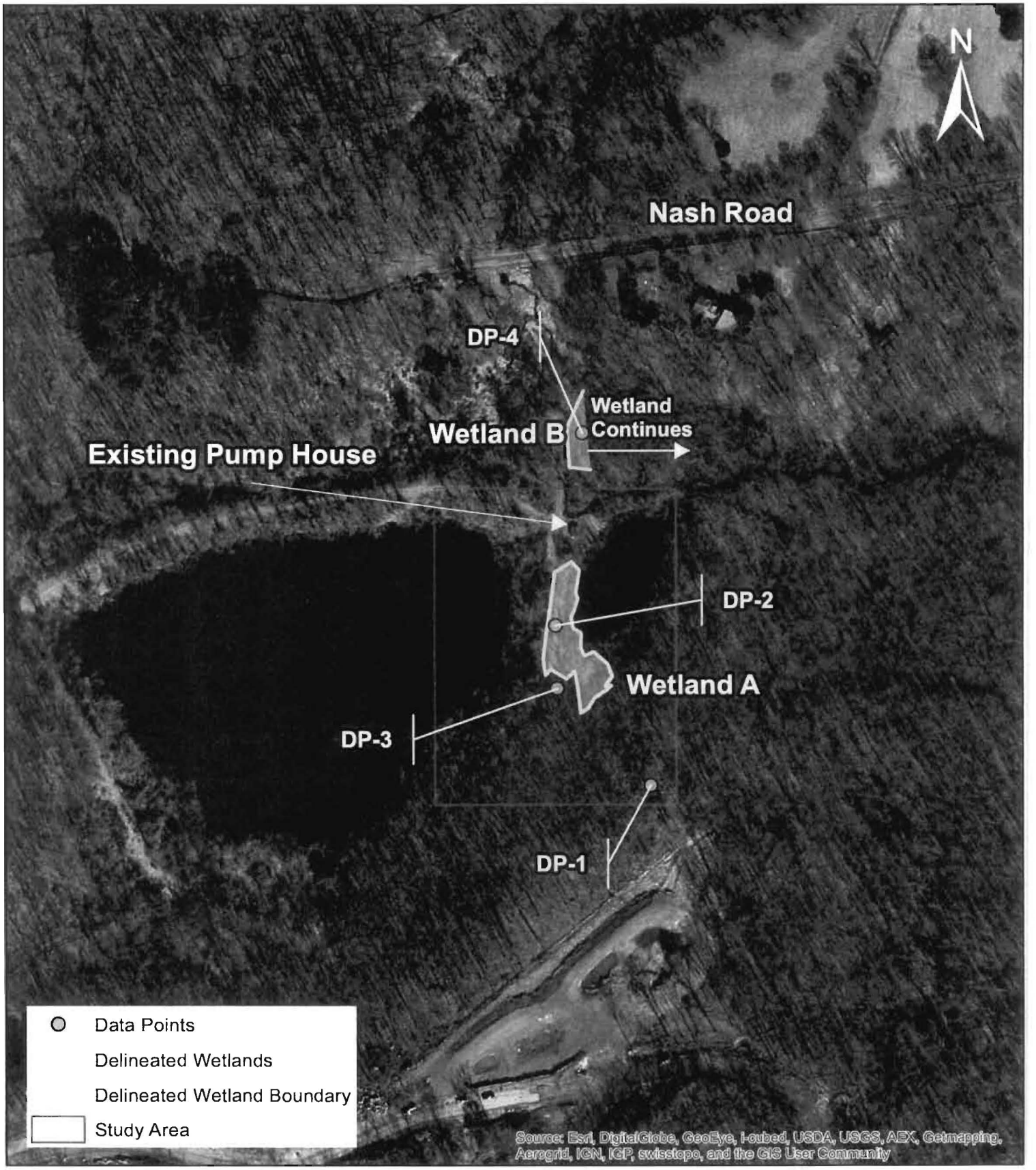

SCALE

0 90 180 270 360 Feet

Wetland Delineation
Figure 3

HAZEN AND SAWYER
Environmental Engineers & Scientists

Wild Oaks Water System
Town of Lewisboro Wetland Activity

WILD OAKS WATER SYSTEM

Town of Lewisboro Site Development and Wetland Activity Permit Application for Well #4 and Well #6

Attachment 4

Westchester County Affidavit of Ownership

Deidre,
pls return
to Planning
Thanks,
Sue

TOWN OF LEWISBORO PLANNING BOARD

PO Box 725, 20 North Salem Road, Cross River, NY 10518
Email: planning@lewisborogov.com
Tel: (914) 763-5592 Fax: (914) 763-3637

Tax Payment Affidavit Requirement

This form must accompany all applications to the Planning Board.

Under regulations adopted by the Town of Lewisboro, the Planning Board may not accept any application unless an affidavit from the Town of Lewisboro Receiver of Taxes is on file in the Planning Board office. The affidavit must show that all amounts due to the Town of Lewisboro as real estate taxes and special assessments on the total area encompassed by the application, together with all penalties and interest thereon, have been paid.

Under New York State law, the Westchester County Clerk may not accept any subdivision map for filing unless the same type of affidavit from the Town of Lewisboro Receiver of Taxes is submitted by the applicant at the time of filing.

This form must be completed by the applicant and must accompany all applications to the Planning Board. Upon receipt, the Planning Board Secretary will send the form to the Receiver of Taxes for signature and notarization. If preferred, the applicant may directly obtain the signature of the Receiver of Taxes and notarization prior to submission.

To Be Completed by Applicant
(Please type or print)

Richard Ruge
Name of Applicant

Wild Oaks Storage Tank
Project Name

Property Description

Tax Block(s): ~~023~~ 11139
Tax Lot(s): ~~0004~~ 23
Tax Sheet(s): ~~11139~~ 7H

Property Assessed to:

New York American Water Wild Oaks Water Co.
Name 260 Harrison Ave. c/o NY American Water
Address Harrison, NY 10528
City *State* *Zip*

The undersigned, being duly sworn deposes and says that a search of the tax records in the office of the Receiver of Taxes, Town of Lewisboro, reveals that all amounts due to the Town of Lewisboro as real estate taxes and special assessments, together with all penalties and interest thereon, affecting the premises described below, have been paid.

Signature - Receiver of Taxes: [signature] 9/8/2015
Date

Sworn to before me this
8th **day of** September, 2015

JANET L. DONOHUE
NOTARY PUBLIC, STATE OF NEW YORK
Registration No. 01DO6259627
Qualified in Westchester County
Commission Expires April 16, 2016

[signature]
Signature - Notary Public (affix stamp)

TOWN OF LEWISBORO PLANNING BOARD

PO Box 725, 20 North Salem Road, Cross River, NY 10518
Email: planning@lewisborogov.com
Tel: (914) 763-5592
Fax: (914) 763-3637

Affidavit of Ownership

State of : New York

County of: Westchester County

Brian Bruce, being duly sworn, deposes and says that he/she

resides at _____

in the County of _____, State of New York

and that he/she is (check one) ☐ the owner, or ☑ the President
Title

of New York American Water
Name of corporation, partnership, or other legal entity

which is the owner, in fee of all that certain log, piece or parcel of land situated, lying and being in the Town of Lewisboro, New York, aforesaid and know and designated on the Tax Map in the Town of Lewisboro as:

Block 023, Lot 0004, on Sheet 11139.

Brian F Bruce, PRES. NYAW
Owner's Signature

Sworn to before me this

19th **day of** August, 2015

ROSE M. SIMPSON
Notary Public, State of New York
No. 01SI5031048
Qualified in Nassau County
Commission Expires July 25, 2018

Rose M. Simpson
Notary Public – affix stamp

WILD OAKS WATER SYSTEM

Town of Lewisboro Site Development and Wetland Activity Permit Application for Well #4 and Well #6

Attachment 5

Tax Payment Affidavit

TAX PAYMENT AFFIDAVIT REQUIREMENT

Under regulations adopted by the Town of Lewisboro, the Planning Board may not accept any application unless an affidavit from the Town of Lewisboro Receiver of Taxes is on file in the Planning Board Office. The affidavit must show that all amounts due to the Town of Lewisboro as real estate taxes and special assessments on the total area encompassed by the application, together with all penalties and interest thereon, have been paid.

Under New York State Law, the Westchester County Clerk may not accept any subdivision map for filing unless the same type of affidavit from the Town of Lewisboro Receiver of Taxes is submitted by the applicant at the time of filing.

INSTRUCTIONS

The applicant is to complete the information box below and return to: **Receiver of Taxes, Town of Lewisboro, 11 Main Street, South Salem, New York 10590.**

For Planning Board applications, the Receiver of Taxes will return this form and the affidavit to the Planning Board Office. For filing actions with the Westchester County Clerk, Division of Land Records, the Receiver of Taxes will return this form and the affidavit to the applicant by mail if a stamped and self-addressed envelope is submitted with this form.

IF ANY TAXES ARE FOUND TO BE DUE ON THE PROPERTY RELATING TO THE APPLICATION, THEN THAT APPLICATION CAN NOT BE ACCEPTED BY THE PLANNING BOARD UNTIL THE TAXES ARE PAID.

TO BE COMPLETED BY APPLICANT

(PLEASE TYPE OF PRINT)

New York American Water
name of applicant

Wild Oaks Water System
project name

property description:
tax sheet 8
block 11137
lot 123

property assessed to:
name [redacted] American Water Co.
address 260 Harrison Avenue
Harrison, NY 10528

application type (check one)

____ Sketch Plan Review	____ Preliminary Subdivision Plat	____ final Subdivision Plat
X Site Development Plan	____ Special Permit Use	____ Waiver of site Plan Procedures
X Wetlands Permit		____ Filing with The Westchester County Clerk

NO OUTSTANDING TAXES ARE DUE: _____ Receiver of Taxes 11/28/2016 Date

Sworn before me this 28 day of 11 20 16

Janet L Donohue

JANET L. DONOHUE
NOTARY PUBLIC, STATE OF NEW YORK
No. 01DO6259627
Qualified in Westchester County
Commission Expires April 16, 2020

WILD OAKS WATER SYSTEM

Town of Lewisboro Site Development and Wetland Activity Permit Application for Well #4 and Well #6

Attachment 6

Project Drawings

NEW YORK
AMERICAN WATER

WILD OAKS GROUNDWATER WELL REPLACEMENT
LEWISBORO, WESTCHESTER COUNTY, NY
BID SET
OCTOBER 2015

WILD OAKS WELL HOUSE

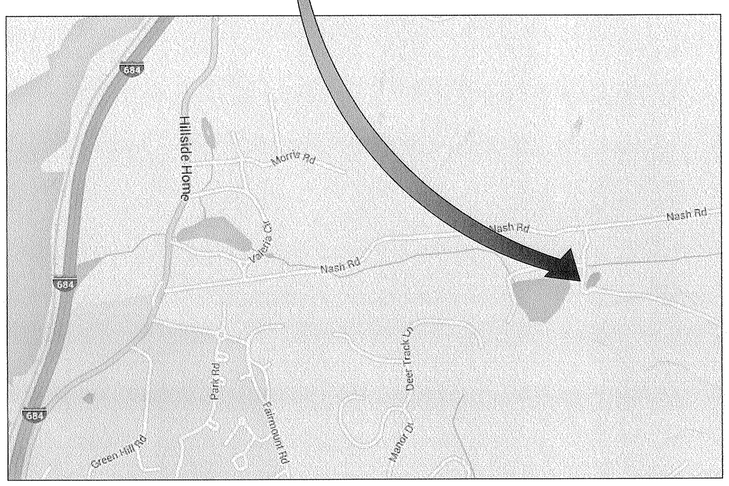

LOCATION MAP

NOT TO SCALE

INDEX OF DRAWINGS

DRAWING	TITLE
GENERAL	
G-1	COVER AND INDEX OF DRAWINGS
G-2	GENERAL NOTES
CIVIL	
C-1	SITE PLAN
C-2	LANDSCAPE PLAN
C-3	EROSION AND SEDIMENT CONTROL DETAILS
C-4	DETAILS
MECHANICAL	
M-1	FLOOR PLAN
M-2	PUMP SCHEDULE AND MISCELLANEOUS DETAILS
STRUCTURAL	
S-1	DETAILS
ELECTRICAL	
E-1	NOTES, SINGLE LINE AND DETAILS

STATE OF NEW YORK
RICHARD EDWARD PETERS
No. 061932
LICENSED PROFESSIONAL ENGINEER

HAZEN AND SAWYER
Environmental Engineers & Scientists
HAZEN AND SAWYER, P.C.
498TH SEVENTH AVENUE – NEW YORK, NY 10018

WILD OAKS WELL HOUSE

N

VICINITY MAP

NOT TO SCALE

BRIAN K. BRUCE
PRESIDENT
NEW YORK AMERICAN WATER

DATE

WARNING
IT IS A VIOLATION OF SECTION 7209.2 OF THE NEW YORK STATE EDUCATION LAW FOR ANY PERSON, UNLESS ACTING UNDER THE DIRECTION OF A LICENSED PROFESSIONAL ENGINEER, TO ALTER IN ANY WAY PLANS, SPECIFICATIONS, PLATS OR REPORTS TO WHICH THE SEAL OF A PROFESSIONAL ENGINEER HAS BEEN APPLIED. IF AN ITEM BEARING THE SEAL OF A PROFESSIONAL ENGINEER IS ALTERED, THE ALTERING ENGINEER SHALL AFFIX TO THE ITEM HIS SEAL AND THE NOTATION "ALTERED BY" FOLLOWED BY HIS SIGNATURE, THE DATE, AND A SPECIFIC DESCRIPTION OF THE ALTERATION.

File: O:\SERIES-CODE-NYC\DRAWINGS\WILD OAKS\GENERAL\G-1, Saved by jbauer Save date: 10/19/2015 9:55 AM
XREF's: COVER-TB

GENERAL NOTES:

1. SITE INFORMATION HAS BEEN PROVIDED BY SITE SURVEY PREPARED BY KIRK ROTHER P.E. CONSULTING ENGINEERING PLLC DATED JUNE 16, 2014 WITH AN ASSUMED DATUM.
2. CONTRACTOR SHALL VERIFY FIELD CONDITIONS BEFORE COMMENCEMENT OF ANY CONSTRUCTION ACTIVITIES. CONTRACTOR SHALL VERIFY EXISTING ELEVATIONS AND DIMENSIONS WHERE NEW WORK WILL MATCH EXISTING. DISCREPANCIES SHALL BE BROUGHT TO THE ATTENTION OF THE ENGINEER FOR RESOLUTION PRIOR TO THE COMMENCEMENT OF WORK.
3. CONTRACTOR SHALL OBTAIN ALL THE NECESSARY PERMITS FROM THE APPROPRIATE AUTHORITIES, DEPARTMENTS, AND/OR AGENCIES HAVING JURISDICTION PRIOR TO COMMENCING WORK.
4. CONTRACTOR SHALL TAKE CARE TO AVOID DAMAGE TO EXISTING PAVEMENT, TREES, VEGETATION, STRUCTURES, AND UTILITIES THAT ARE NOT INDICATED TO BE DEMOLISHED OR REMOVED. ANY DAMAGE TO EXISTING PAVEMENT, TREES, VEGETATION, STRUCTURES, AND UTILITIES NOT INDICATED TO BE DEMOLISHED OR REMOVED SHALL BE REPAIRED AT THE CONTRACTOR'S EXPENSE.
5. UTILITIES HAVE BEEN PLOTTED FROM AVAILABLE SURVEY INFORMATION. IT IS THE CONTRACTOR'S RESPONSIBILITY TO VERIFY THEIR EXACT LOCATION AND TO AVOID DAMAGE TO THEM. THE CONTRACTOR SHALL CONTACT DIG SAFELY NEW YORK AT PHONE NUMBER 1-800-962-7962 OR 811 TO REQUEST UNDERGROUND UTILITY LOCATION MARK-OUT AT LEAST TWO (2) WORKING DAYS BUT NO MORE THAN TEN (10) WORKING DAYS PRIOR TO BEGINNING EXCAVATION, INCLUDING SOIL DRILLING. THE CONTRACTOR SHALL ALSO CONTACT AND REQUEST UTILITY LOCATION MARK-OUT FROM BURIED UTILITY OWNERS WITH UTILITIES ON THE PROJECT SITE THAT ARE NOT PARTICIPANTS OF DIG SAFELY NEW YORK.
6. WHERE PROPOSED WORK IS IN THE VICINITY OF UTILITY POLES, SUCH THAT SUPPORT OF THE POLE(S) WILL BE REQUIRED, THE CONTRACTOR SHALL BE RESPONSIBLE FOR NOTIFYING THE UTILITY OF THE WORK. IT WILL BE THE RESPONSIBILITY OF THE CONTRACTOR TO COORDINATE WITH THE UTILITY FOR SUPPORT OF THE POLE.
7. WHERE OVERHEAD POWER LINES ARE PRESENT, CONTRACTOR MUST CONTACT THE UTILITY PRIOR TO CONSTRUCTION ACTIVITIES TO DETERMINE THE MINIMUM REQUIRED EQUIPMENT CLEARANCE (MEC) DISTANCE BASED UPON LINE STRENGTH.
8. DURING EXCAVATION AND PLACEMENT OF UTILITIES THE CONTRACTOR SHALL COMPLY WITH ALL APPLICABLE SAFETY REGULATIONS AND SHALL SUBMIT TO THE ENGINEER FOR APPROVAL OF SHEET PILING, SHORING AND/OR BRACING DESIGNS AS MAY BE NECESSARY TO COMPLY WITH THESE REGULATIONS.
9. THE CONTRACTOR SHALL REMOVE AND DISPOSE OF ALL DEBRIS GENERATED DURING THE PROJECT OFF SITE AT A PROPERLY PERMITTED DISPOSAL FACILITY.
10. CONTRACTOR SHALL MAKE EVERY EFFORT TO SAVE AND MAINTAIN ALL PROPERTY IRONS, MONUMENTS, OTHER PERMANENT POINTS AND LINES OF REFERENCE AND CONSTRUCTION STAKES. A REGISTERED LAND SURVEYOR AT THE CONTRACTOR'S EXPENSE SHALL REPLACE PROPERTY IRONS, MONUMENTS, AND OTHER PERMANENT POINTS OF REFERENCE DESTROYED BY THE CONTRACTOR.

WATER MAIN PIPING NOTES:

1. CONTRACTOR SHALL MAINTAIN ACCESS TO PRIVATE PROPERTY AT ALL TIMES.
2. CONTRACTOR SHALL MAINTAIN ITS WORK WITHIN THE LIMITS OF THE PROPERTY.
3. THE CONTRACTOR SHALL TAKE ALL PRECAUTIONARY MEASURES TO PROTECT EXISTING PIPELINES OR UTILITIES WHETHER SHOWN OR NOT.
4. ALL PRACTICAL AND NECESSARY EFFORTS SHALL BE TAKEN DURING CONSTRUCTION TO PREVENT UNNECESSARY TREE REMOVAL AND OR DAMAGE.
5. THE LOCATION OF EXISTING UTILITIES HAS BEEN PREPARED FROM THE MOST RELIABLE INFORMATION AVAILABLE TO THE ENGINEER. THE INFORMATION IS NOT GUARANTEED. THEREFORE THE CONTRACTOR SHALL VERIFY THE LOCATION AND ELEVATION OF ALL UTILITIES IN THE FIELD PRIOR TO THE START OF ANY CONSTRUCTION ACTIVITIES.
6. THE CONTRACTOR IS RESPONSIBLE FOR REPAIRING ALL UTILITY LINES AND SERVICES DAMAGED DURING CONSTRUCTION, INCLUDING IRRIGATION LINES AND SERVICES. THE APPROPRIATE UTILITY SHALL BE NOTIFIED OF ALL DAMAGED LINES PRIOR TO REPAIR. ALL NECESSARY REPAIRS SHALL BE PERFORMED IMMEDIATELY UPON DAMAGE OF THE LINE.
7. THE CONTRACTOR IS REQUIRED TO OBTAIN WRITTEN APPROVAL FROM THE ENGINEER FOR ANY DEVIATIONS FROM THE PLANS AND/OR SPECIFICATIONS.
8. THE CONTRACTOR SHALL FIELD VERIFY ALL DIMENSIONS AND ELEVATIONS PRIOR TO COMMENCEMENT OF CONSTRUCTION AND NOTIFY THE ENGINEER IMMEDIATELY OF ANY REQUIRED PLAN DEVIATIONS.
9. CONTRACTOR WILL PROVIDE A MINIMUM VERTICAL CLEARANCE OF 6" BETWEEN ALL LINES THAT CROSS. PIPE CROSSING SHALL BE IN ACCORDANCE WITH THE REQUIREMENTS OF TEN STATE STANDARDS.
10. RESTRAINED, PUSH ON JOINT PIPE SHALL BE USED FOR ALL PIPING ON THIS PROJECT. ALL FITTINGS SHALL BE MECHANICAL JOINT FITTINGS.
11. THE MINIMUM DEPTH OF COVER OVER WATER MAINS AND FORCEMAINS IS 48" EXCEPT WHERE SHOWN DIFFERENTLY ON PLANS.
12. PIPE DEFLECTION SHALL NOT EXCEED 50% OF THE MAXIMUM DEFLECTION RECOMMENDED BY THE MANUFACTURER.
13. ALL OPEN TRENCHES AND HOLES ADJACENT TO ROADWAY OR WALKWAY SHALL BE PROPERLY MARKED AND BARRICADED TO ASSURE THE SAFETY OF BOTH VEHICULAR AND PEDESTRIAN TRAFFIC.
14. TRENCHES OR HOLES NEAR WALKWAYS, IN ROADWAYS OR THEIR SHOULDERS SHALL NOT BE LEFT OPEN DURING NIGHT TIME HOURS WITHOUT ADEQUATE PROTECTION.
15. CONTRACTOR SHALL PROMPTLY REPAIR AND RESTORE EXISTING PAVEMENT, SIDEWALKS, CURBS, DRIVEWAYS, PIPES, RESIDENTIAL AND COMMERCIAL SPRINKLER LINES, CONDUIT, CABLES, ETC. AND LANDSCAPE AREAS DAMAGED AS A RESULT OF CONSTRUCTION ACTIVITIES.
16. CONTRACTOR SHALL PROVIDE TEMPORARY FENCING AS REQUIRED BY AGENCIES HAVING JURISDICTION OVER THE PROJECT AND/OR WHEN REQUIRED FOR PUBLIC SAFETY.
17. THE CONTRACTOR SHALL BE RESPONSIBLE AT ALL TIMES THROUGHOUT THE DURATION OF CONSTRUCTION AND UNTIL ACCEPTANCE OF WORK, FOR THE PROTECTION OF EXISTING AND NEWLY INSTALLED UTILITIES FROM DAMAGE OR DISRUPTION OF SERVICE. THE CONTRACTOR SHALL BE RESPONSIBLE FOR TAKING SUCH MEASURES AS NECESSARY TO PROTECT THE HEALTH, SAFETY AND WELFARE OF THOSE PERSONS HAVING ACCESS TO THE WORK SITE.
18. CONTRACTOR SHALL ADJUST TO FINAL GRADE ALL EXISTING UTILITY CASTINGS INCLUDED VALVE BOXES, MAINTENANCE ACCESS STRUCTURES, HAND HOLES, PULL BOXES, INLETS AND SIMILAR STRUCTURES IN CONSTRUCTION AREA TO BE OVERLAID WITH ASPHALT.
19. DISINFECTION AND BACTERIOLOGICAL TESTING SHALL BE PERFORMED IN ACCORDANCE WITH AWWA STANDARD C651-05. MAINS AND SERVICES SHALL NO BE PLACED INTO SERVICE UNTIL ACCEPTABLE BACTERIOLOGICAL RESULTS ARE OBTAINED AND PERMISSION TO PLACE THE SERVICE IN OPERATIONS HAS BEEN RECEIVED.
20. PRESSURE AND LEAKAGE TESTING SHALL BE PERFORMED IN ACCORDANCE WITH THE LATEST EDITION OF AWWA STANDARD C600-10.

WARNING
IT IS A VIOLATION OF SECTION 7209.2 OF THE NEW YORK STATE EDUCATION LAW FOR ANY PERSON, UNLESS ACTING UNDER THE DIRECTION OF A LICENSED PROFESSIONAL ENGINEER, TO ALTER IN ANY WAY PLANS, SPECIFICATIONS, PLATS OR REPORTS TO WHICH THE SEAL OF A PROFESSIONAL ENGINEER HAS BEEN APPLIED. IF AN ITEM BEARING THE SEAL OF A PROFESSIONAL ENGINEER IS ALTERED, THE ALTERING ENGINEER SHALL AFFIX TO THE ITEM HIS SEAL AND THE NOTATION "ALTERED BY" FOLLOWED BY HIS SIGNATURE, THE DATE, AND A SPECIFIC DESCRIPTION OF THE ALTERATION.

NO.	ISSUED FOR	DATE	BY
A	BID SET	OCT 2015	KLB

DESIGNED MZ
DRAWN MZ/JFB
CHECKED KLB
PROJ.ENGR. OT
PROJ.DIR. REP

STATE OF NEW YORK · RICHARD EDWARD PETERS · LICENSED PROFESSIONAL ENGINEER

HAZEN AND SAWYER
Environmental Engineers & Scientists
498 Seventh Aveune
New York, New York 10018

NEW YORK AMERICAN WATER

WILD OAKS GROUNDWATER WELL REPLACEMENT

GENERAL
GENERAL NOTES

THE SCALE BAR SHOWN BELOW MEASURES ONE INCH LONG ON THE ORIGINAL DRAWING.

DATE OCTOBER 2015
H&S JOB NUMBER 90185-000
CONTRACT NUMBER -
DRAWING NUMBER G-2

BID SET

File: G:\90185-000-NYC\DRAWINGS\WILD OAKS\GENERAL\G-2 Saved by jbauer Save date: 10/19/2015 10:32 AM
PLOT DATE: 10/19/2015 11:03 AM BY: JBAUER
XREF's: ANSI D-TB

LEGEND

EXISTING	PROPOSED	
168		CONTOUR
		UTILITY POLE
"A5"		WETLAND FLAG LOCATION & IDENTIFIER
		MONITORING WELL
		EDGE OF GRAVEL
		EDGE OF SHORE
		BOLLARD
		GATE VALVE
E	UGE	UNDERGROUND ELECTRIC LINE
W	W	WATER LINE
		STONE WALL
		WETLAND LIMITS
		SILT FENCE
		LIMIT OF CONSTRUCTION
		PROPERTY LINE
		STABILIZED CONSTRUCTION ENTRANCE
		WETLAND AREA
		WETLAND ADJACENT AREA

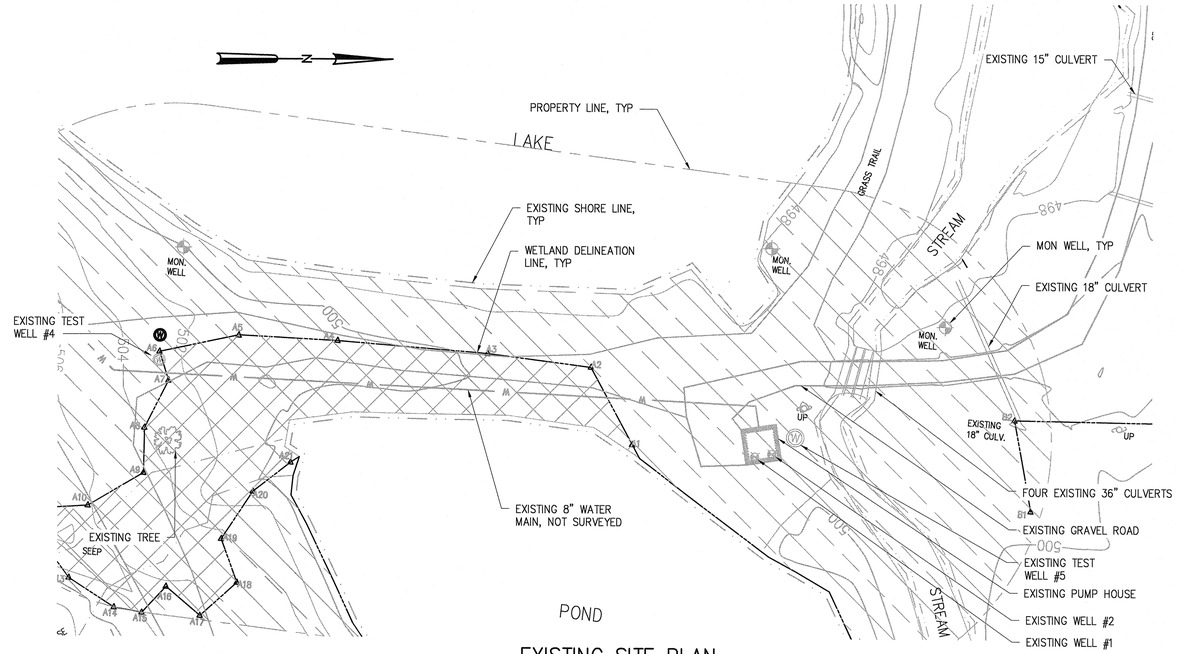

EXISTING SITE PLAN

SCALE: 1"=30'

1"=30'-0" 30 15 0 30'

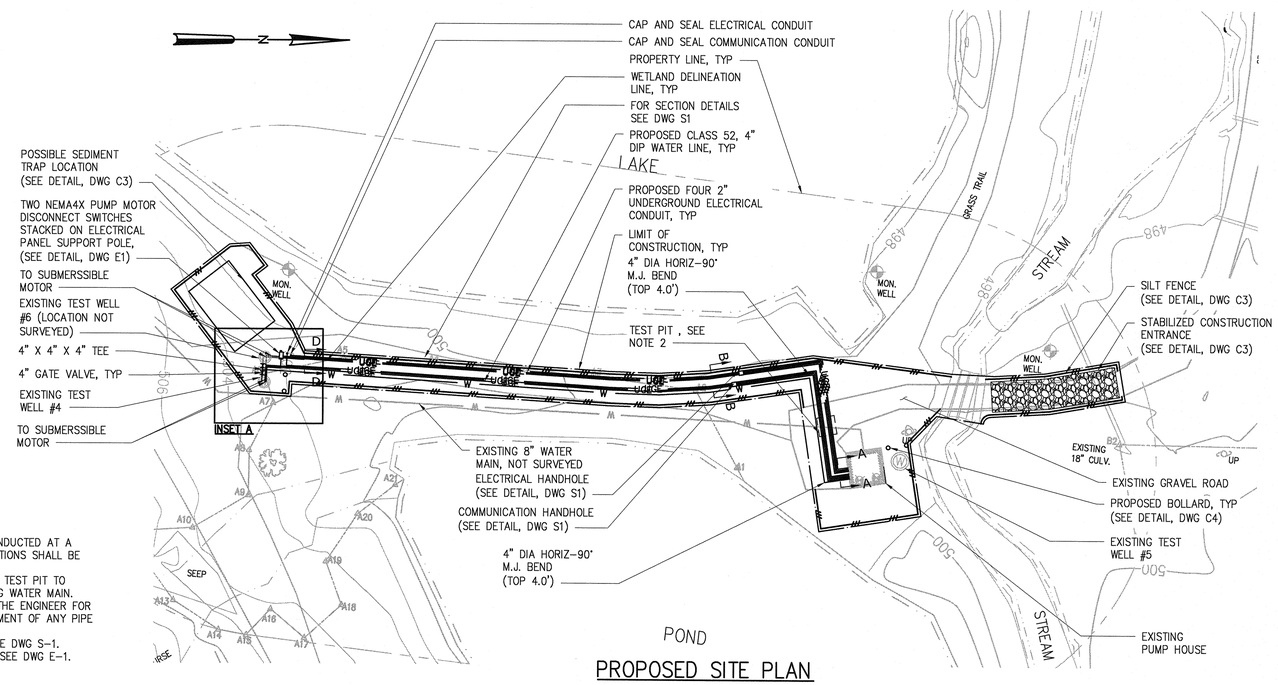

PROPOSED SITE PLAN

SCALE: 1"=30'

1"=30'-0" 30 15 0 30'

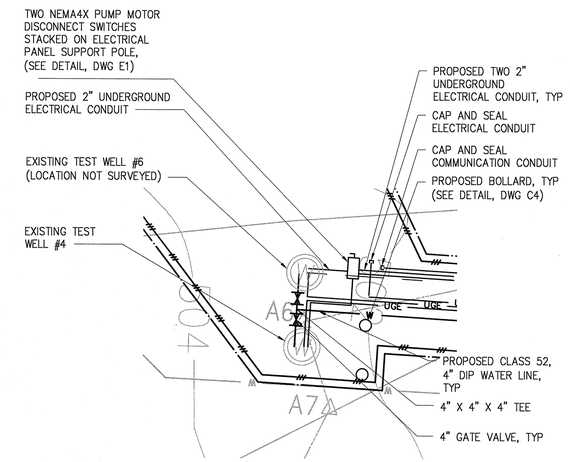

INSET A

SCALE: 1"=10'

NOTES:
1. TOPOGRAPHIC SURVEY HAS BEEN CONDUCTED AT A RELATIVE DATUM AND ACTUAL ELEVATIONS SHALL BE DETERMINED ON SITE.
2. THE CONTRACTOR SHALL CONDUCT A TEST PIT TO VERIFY THE LOCATION OF THE EXTING WATER MAIN. SKETCHES SHALL BE SUBMITTED TO THE ENGINEER FOR APPROVAL PRIOR TO THE COMMENCEMENT OF ANY PIPE JACKING OR RELATED WORK.
3. BURIED CONDUIT SECTION DETAILS SEE DWG S-1.
4. FOR CABLE AND CONDUIT SCHEDULE SEE DWG E-1.

WARNING
IT IS A VIOLATION OF SECTION 7209.2 OF THE NEW YORK STATE EDUCATION LAW FOR ANY PERSON, UNLESS ACTING UNDER THE DIRECTION OF A LICENSED PROFESSIONAL ENGINEER, TO ALTER IN ANY WAY PLANS, SPECIFICATIONS, PLATS OR REPORTS TO WHICH THE SEAL OF A PROFESSIONAL ENGINEER HAS BEEN APPLIED. IF AN ITEM BEARING THE SEAL OF A PROFESSIONAL ENGINEER IS ALTERED, THE ALTERING ENGINEER SHALL AFFIX TO THE ITEM HIS SEAL AND THE NOTATION "ALTERED BY" FOLLOWED BY HIS SIGNATURE, THE DATE, AND A SPECIFIC DESCRIPTION OF THE ALTERATION.

NO.	ISSUED FOR	DATE	BY
B	WCDOH REVISIONS PUMP 6	AUG 2016	KLB
A	BID SET	OCT 2015	KLB

DESIGNED MZ
DRAWN MZ
CHECKED KLB
PROJ.ENGR. KLB
PROJ.DIR. REP

STATE OF NEW YORK · RICHARD EDWARD PAGE · 065661 · LICENSED PROFESSIONAL ENGINEER

HAZEN AND SAWYER
Environmental Engineers & Scientists
498 Seventh Aveune
New York, New York 10018

NEW YORK AMERICAN WATER

WILD OAKS GROUNDWATER WELL REPLACEMENT

CIVIL SITE PLAN

THE SCALE BAR SHOWN BELOW MEASURES ONE INCH LONG ON THE ORIGINAL DRAWING.

DATE OCTOBER 2015
H&S JOB NUMBER 90185-000
CONTRACT NUMBER -
DRAWING NUMBER C-1

WCDOH REVIEW

File: Q:\90185-000-NYC\DRAWINGS\WILD OAKS\CIVIL\C-1B Saved by bcasull Save date: 8/5/2016 11:30 AM
PLOT DATE: 8/5/2016 3:25 PM BY: BCASULL
XREFs= CX-SP-TP,ANSI D-TB - 08042016 REISSUE,CN-EC,CN-LS,CN-ST,CN-PP

LEGEND

EXISTING	PROPOSED	
168		CONTOUR
		UTILITY POLE
"A5"		WETLAND FLAG LOCATION & IDENTIFIER
		MONITORING WELL
		EDGE OF GRAVEL
		EDGE OF SHORE
		BOLLARD
		GATE VALVE
E	UGE	UNDERGROUND ELECTRIC LINE
W	W	WATER LINE
		STONE WALL
		WETLAND LIMITS
		SILT FENCE
		LIMIT OF CONSTRUCTION
		PROPERTY LINE
		STABILIZED CONSTRUCTION ENTRANCE
		WETLAND AREA
		WETLAND ADJACENT AREA

PROGRESS OF CONSTRUCTION:

(*P) – INSTALLATION OF EQUIPMENT IS PENDING

(*B) – INSTALLATION OF EQUIPMENT HAS BEGUN

(*C) – INSTALLATION OF EQUIPMENT HAS BEEN COMPLETED

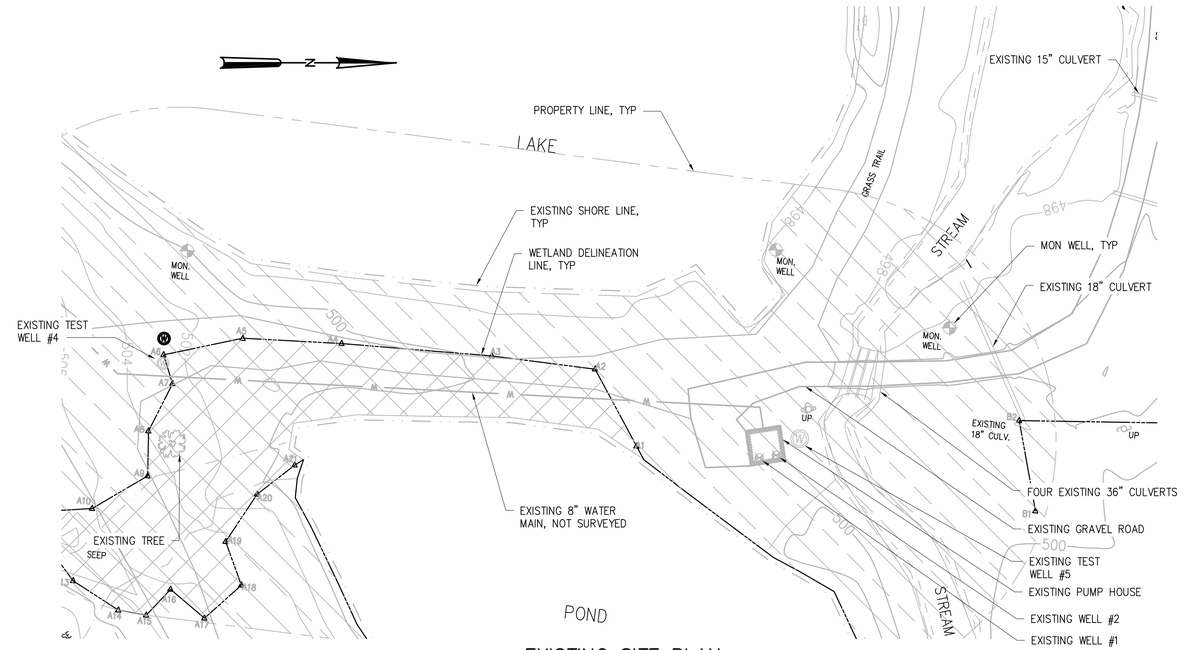

EXISTING SITE PLAN

SCALE: 1"=30'

1"=30'-0" 30 15 0 30'

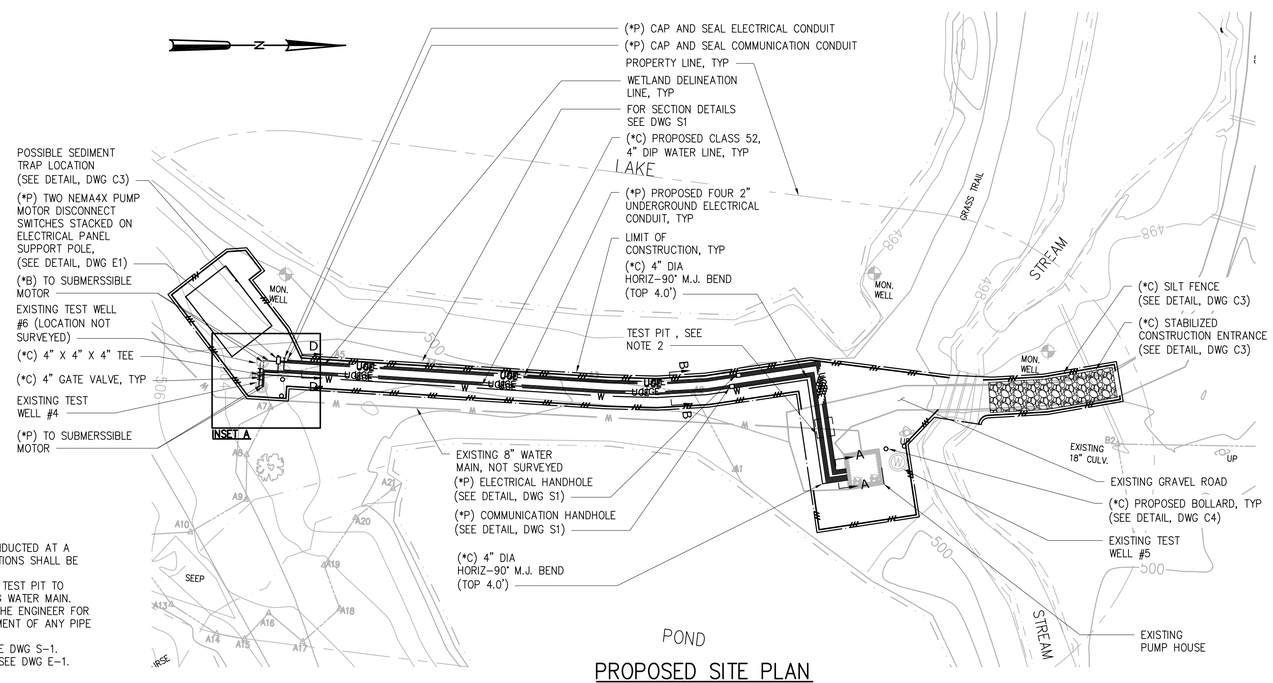

PROPOSED SITE PLAN

SCALE: 1"=30'

1"=30'-0" 30 15 0 30'

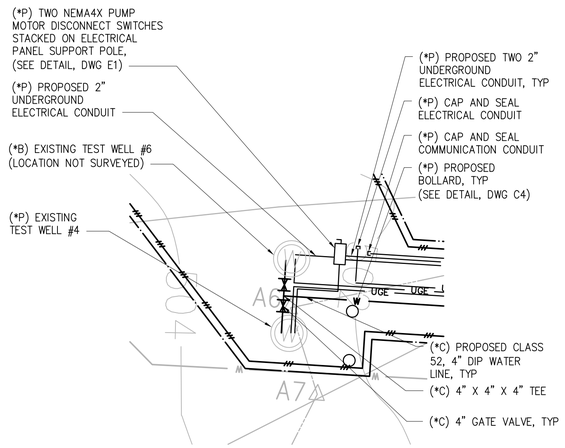

INSET A

SCALE: 1"=10'

NOTES:

1. TOPOGRAPHIC SURVEY HAS BEEN CONDUCTED AT A RELATIVE DATUM AND ACTUAL ELEVATIONS SHALL BE DETERMINED ON SITE.
2. THE CONTRACTOR SHALL CONDUCT A TEST PIT TO VERIFY THE LOCATION OF THE EXITING WATER MAIN. SKETCHES SHALL BE SUBMITTED TO THE ENGINEER FOR APPROVAL PRIOR TO THE COMMENCEMENT OF ANY PIPE JACKING OR RELATED WORK.
3. BURIED CONDUIT SECTION DETAILS SEE DWG S-1.
4. FOR CABLE AND CONDUIT SCHEDULE SEE DWG E-1.

WARNING

IT IS A VIOLATION OF SECTION 7209.2 OF THE NEW YORK STATE EDUCATION LAW FOR ANY PERSON, UNLESS ACTING UNDER THE DIRECTION OF A LICENSED PROFESSIONAL ENGINEER, TO ALTER IN ANY WAY PLANS, SPECIFICATIONS, PLATS OR REPORTS TO WHICH THE SEAL OF A PROFESSIONAL ENGINEER HAS BEEN APPLIED. IF AN ITEM BEARING THE SEAL OF A PROFESSIONAL ENGINEER IS ALTERED, THE ALTERING ENGINEER SHALL AFFIX TO THE ITEM HIS SEAL AND THE NOTATION "ALTERED BY" FOLLOWED BY HIS SIGNATURE, THE DATE, AND A SPECIFIC DESCRIPTION OF THE ALTERATION.

NO.	ISSUED FOR	DATE	BY
B1	ADMIN PERMIT	NOV 2016	DJB
B	WCDOH REVISIONS PUMP 6	AUG 2016	KLB
A	BID SET	OCT 2015	KLB

DESIGNED MZ
DRAWN MZ
CHECKED KLB
PROJ.ENGR. KLB
PROJ.DIR. REP

HAZEN AND SAWYER
Environmental Engineers & Scientists
498 Seventh Aveune
New York, New York 10018

NEW YORK AMERICAN WATER

WILD OAKS GROUNDWATER WELL REPLACEMENT

CIVIL
SITE PLAN
(PROGRESS OF CONSTRUCTION)

THE SCALE BAR SHOWN BELOW MEASURES ONE INCH LONG ON THE ORIGINAL DRAWING.

DATE NOVEMBER 2016
H&S JOB NUMBER 90185-000
CONTRACT NUMBER -
DRAWING NUMBER C-1A

File: Q:\90185-000-NYC\DRAWINGS\WILD OAKS\CIVIL\C-1A Saved by mzahnow Save date: 11/21/2016 2:16 PM
PLOT DATE: 11/21/2016 2:22 PM BY: MZAHNOW
XREFs= CK-SP-TP,ANSI D-TB = 08042016 REISSUE,CN-EC,CN-LS,CN-ST,CN-PP

SEEDING NOTES:

1. SIX (6) WEEKS PRIOR TO SEEDING, EACH SEED MIX SPECIES GERMINATION AND PURITY TEST RESULTS SHALL BE SUBMITTED TO THE ENGINEER FOR APPROVAL.

2. ALL SEEDING OPERATIONS MUST BE SCHEDULED AND APPROVED AT LEAST FIVE (5) DAYS IN ADVANCE TO ENSURE THE ENGINEER IS PRESENT TO OBSERVE THE WORK. ALL SEED SHALL BE INTERAGENCY CERTIFIED UNDER THE AUSPICES OF A STATE SEED IMPROVEMENT COOPERATIVE AND SHALL BEAR THEIR SEALS OF CERTIFICATION ON EACH 50 POUND BAG. PERMANENT SEED SHALL BE 75% PURE LIVE SEED MINIMUM.

3. SEED BROUGHT TO THE PROJECT SITE SHALL BE IN UNOPENED BAGS SHOWING THE NET WEIGHT, COMPOSITION OF MIX, SUPPLIERS NAME AND GUARANTEE OF ANALYSIS. SEED SHALL BE STORED IN ORIGINAL UNOPENED PACKAGES, KEPT DRY, AND NOT OPENED UNTIL NEEDED FOR USE. DAMAGED OR FAULTY PACKAGES SHALL NOT BE USED AND WILL BE REJECTED. SEED SHALL HAVE BEEN HARVESTED FOR PLANTING IN THE CURRENT GROWING SEASON, AND SHALL HAVE BEEN PACKED WITHIN THE LAST 9 MONTHS.

4. SEED MIXTURE SHALL BE AS SPECIFIED IN THE CONTRACT DRAWINGS UNLESS OTHERWISE DIRECTED BY THE ENGINEER.

5. SEED MATERIALS WILL BE INSPECTED BY THE ENGINEER UPON ARRIVAL AT THE JOB SITE AND PRIOR TO PLANTING. ANY MATERIALS NOT IN COMPLIANCE WITH SPECIFICATIONS WILL NOT BE ACCEPTED AND SHALL BE REMOVED FROM THE JOB SITE IMMEDIATELY.

6. ALL SEED MATERIALS SHALL BE PROTECTED FROM DRYING OUT AND FROM WIND DAMAGE DURING DELIVERY.

7. SEEDBED PREPARATION SHALL CONSIST OF SCARIFYING ALL COMPACTED AREAS AND REMOVE ALL DEBRIS AND OBSTACLES SUCH AS ROCKS AND STUMPS.

8. DO NOT BROADCAST SEED BY MECHANICAL APPLICATION WHEN THE WIND VELOCITY IS SUCH AS TO PREVENT UNIFORM SEED DISTRIBUTION.

9. WETLAND RESTORATION AREAS SHALL BE SEEDED WITH FACW MEADOW SEED MIX AT A RATE OF 40 LBS/AC. OATS (ARIUM SATIVA) SHALL BE ADDED TO THE FACW MEADOW SEED MIX AT A RATE OF 10 LBS/AC. SEED MIX SHALL BE OBTAINED FROM ERNST CONSERVATION SEEDS INC. (MIX NO. ERNMX-122), 8884 MERCER PIKE, MEADVILLE, PA 16335, (800) 873-3321, OR APPROVED EQUAL.

10. UPLAND RESTORATION AREAS SHALL BE SEEDED WITH DEER RESISTANT MEADOW SEED MIX AT A RATE OF 40 LBS/AC. OATS (ARIUM SATIVA) SHALL BE ADDED TO THE DEER RESISTANT MEADOW SEED MIX AT A RATE OF 10 LBS/AC. SEED MIX SHALL BE OBTAINED FROM ERNST CONSERVATION SEEDS INC. (MIX NO. ERNMX-155), 8884 MERCER PIKE, MEADVILLE, PA 16335, (800) 873-3321, OR APPROVED EQUAL.

11. OPTIMUM SEEDING TIMES ARE IN THE SPRING FROM APRIL 1 – JUNE 1 AND IN LATE SUMMER AND EARLY FALL FROM SEPTEMBER 1 – OCTOBER 15. IF CONSTRUCTION IS COMPLETED DURING MID-SUMMER, SEEDING MAY BE DONE IF WATERING WILL BE PROVIDED. AFTER OCTOBER 15 AND UP TO APRIL 1, MULCH SHOULD BE APPLIED UNTIL THE PERMANENT SEEDING CAN BE DONE DURING THE RECOMMENDED SEEDING DATES.

12. SEED SHALL BE BROADCAST BY HAND OR MECHANICALLY USING A DROP-HOPPER. SEEDS SHALL BE BLENDED THOROUGHLY WITH A SAND FILLER AND UNIFORMLY BROADCAST OVER THE ENTIRE AREA THEN GENTLY HAND RAKED 1/8 TO 1/4 INCH INTO THE SOIL.

13. FOLLOWING THE SEEDING OPERATION, FERTILIZER SHALL BE APPLIED AS NEEDED, ACCORDING TO RECOMMENDATIONS FROM SOIL TESTING. WHEN REQUIRED, 10-10-10 FAST RELEASE FERTILIZER SHALL BE BROADCAST AT A RATE OF 400 LBS/ACRE THROUGHOUT THE SEEDED AREA BY HAND OR MECHANICALLY USING A CYCLONE BROADCASTER. SEED SHALL BE WATERED AS RECOMMENDED BY THE SEED MANUFACTURER TO ACHIEVE SPECIFIED GROWTH COVERAGE.

14. SEEDED AREAS SHALL BE COVERED WITH ECS-1B SINGLE NET STRAW BIODEGRADABLE ROLLED EROSION CONTROL PRODUCT FURNISHED BY EAST COAST EROSION BLANKETS 443 BRICKER ROAD, BERRYVILLE, PA 19056 (800) 582-4005 OR APPROVED EQUAL. ALTERNATIVELY, MULCHING STRAW OF OAT OR WHEAT STALKS (NOT HAY) SHALL BE APPLIED AT A RATE OF 2 TONS PER ACRE (100 – 200 BALES / ACRE), SHALL BE UNIFORMLY DISTRIBUTED OVER THE SOWN SEEDS, AND HELD IN PLACE THROUGH USE OF A STRAW CRIMPER.

15. SEEDED AREAS SHALL BE WATERED AT A MINIMUM OF ONCE PER WEEK UNTIL SEED HAS GERMINATED AND BECOME ESTABLISHED.

16. ACCEPTABLE SEEDING WILL BE WHEN 85% COVERAGE OF THE OPEN AREA WITH THE SEEDED SPECIES HAS BEEN ACCOMPLISHED. ANY AREA NOT MEETING THIS REQUIREMENT SHALL BE RESEEDED WITH THE ORIGINAL SEED MIX.

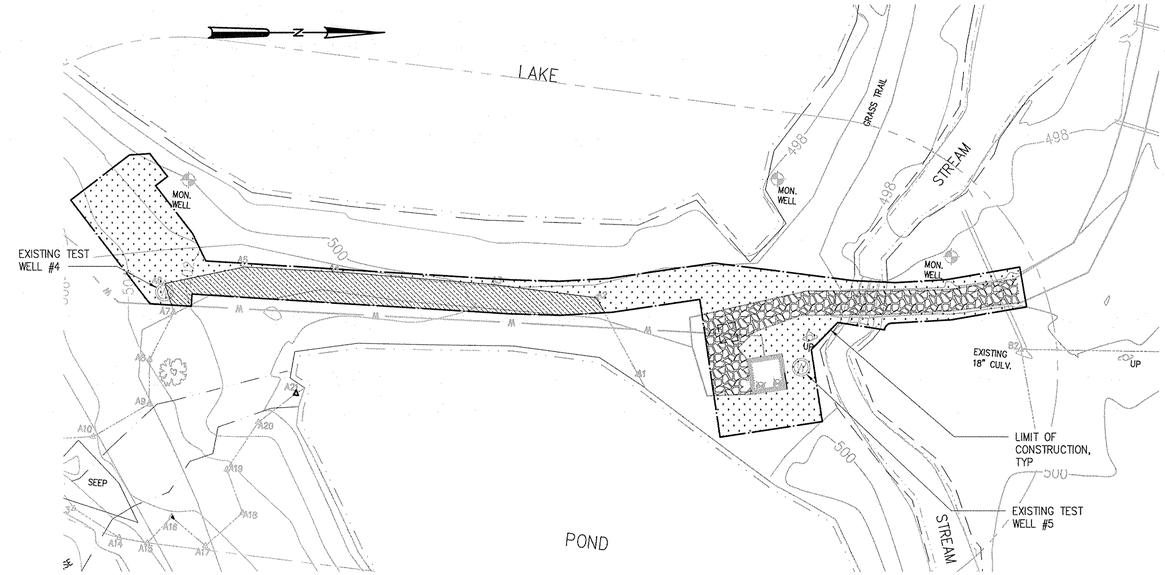

LANDSCAPING PLAN

SCALE: 1"=30'

DEER RESISTANT MEADOW MIX, 5016 SF

FACW MEADOW SEED MIX, 1850 SF

GRAVEL ROAD, TO BE REPLACED IN KIND

LIMIT OF CONSTRUCTION

DEER RESISTANT MEADOW MIX		
SCIENTIFIC NAME	COMMON NAME	PERCENTAGE
SCHIZACHYRIUM SCOPARIUM	LITTLE BLUESTEM	38
ELMYRUS VIRGINICUS	VIRGINIA WILDRYE	17.5
SORGHASTRUM NUTANS	INDIANGRASS	9
ECHINACEA PURPUREA	PURPLE CONEFLOWER	4
CHAMAECRISTA FASICULATA	PARTRIDGE PEA	4
RUDBECKIA HIRTA	BLACKEYED SUSAN	3
PENSTEMON DIGITALIS	TALL WHITE BEARDTONGUE	3
TRIDENS FLAVUS	PURPLETOP	3
ASTER OBLONGIFOLIUS	AROMATIC ASTER	3
TRADESCANTIA OHIENSIS	OHIO SPIDERWORT	3
LIATRIS SPICATA	BLAZING STAR	3
COREOPSIS LANCEOLATA	LANCELEAF COREOPSIS	2.5
ASCLEPIAS TUBEROSA	BUTTERFLYWEED	2.25
HELIOPSISHELIANTHOIDES	OXEYE SUNFLOWER	2
BAPTISIA AUSTRALIS	FALSE INDIGO	0.5
MONARDA FISTULOSA	WILD BERGAMOT	0.5
SOLIDAGO NEMORALIS	GRAY GOLDENROD	0.5
SENNA HEBECARPA	WILD SENNA	0.5
SOLIDAGO JUNCEA	EARLY GOLDENROD	0.5
PYCNANTHEMUM INCANUM	HOARY MOUNTAINMINT	0.25

FACW MEADOW SEED MIX		
SCIENTIFIC NAME	COMMON NAME	PERCENTAGE
CAREX VULPINOIDEA	FOX SEDGE	30
ELYMUS VIRGINICUS	VIRGINIA WILD RYE	20
CAREX LURIDA	LURID SEDGE	14
SCIRPUS ATROVIRENS	GREEN BULRUSH	6
CAREX LUPULINA	HOP SEDGE	5
CAREX SCOPARIA	BLUNT BROOM SEDGE	4
VERBENA HASTATA	BLUE VERVAIN	3.6
HELIOPSIS HELIANTHUS	OXYE SUNFLOWER	2
JUNCUS EFFUSUS	SOFT RUSH	2
GLYCERIA CANADENSIS	RATTLESNAKE GRASS	2
EUPATORIUM PERFOLIATUM	BONESET	2
ONOCLEA SENSIBILIS	SENSITIVE FERN	2
ASCLEPIAS INCARNATA	SWAMP MILKWEED	1.2
EUPATORIUM FISTULOSUM	JOE PYE WEED	1
ASTER UMBELLATUS	FLAT TOPPED WHITE ASTER	1
SISYRINCHIUM ANGUSTIFOLIUM	NARROWLEAF BLUE EYED GRASS	1
HELIANTHUS ANGUSTIFOLIUS	SWAMP SUNFLOWER	1
SCIRPUS CYPERINUS	WOOLGRASS	1
MIMULUS RINGENS	SQUARE STEMMED MONKEYFLOWER	0.8
LOBELIA SIPHILITICA	GREAT BLUE LOBELIA	0.3
PYCNANTHEMUM TENUIFOLIUM	SLENDER MOUNTIANMINT	0.1

WARNING
IT IS A VIOLATION OF SECTION 7209.2 OF THE NEW YORK STATE EDUCATION LAW FOR ANY PERSON, UNLESS ACTING UNDER THE DIRECTION OF A LICENSED PROFESSIONAL ENGINEER, TO ALTER IN ANY WAY PLANS, SPECIFICATIONS, PLATS OR REPORTS TO WHICH THE SEAL OF A PROFESSIONAL ENGINEER HAS BEEN APPLIED. IF AN ITEM BEARING THE SEAL OF A PROFESSIONAL ENGINEER IS ALTERED, THE ALTERING ENGINEER SHALL AFFIX TO THE ITEM HIS SEAL AND THE NOTATION "ALTERED BY" FOLLOWED BY HIS SIGNATURE, THE DATE, AND A SPECIFIC DESCRIPTION OF THE ALTERATION.

1"=30'-0" 30 15 0 30'

BID SET

NO.	ISSUED FOR	DATE	BY
A	BID SET	OCT 2015	KLB

DESIGNED MZ
DRAWN MZ
CHECKED KLB
PROJ.ENGR. OT
PROJ.DIR. REP

STATE OF NEW YORK · RICHARD EDWARD PETERS · LICENSED PROFESSIONAL ENGINEER

HAZEN AND SAWYER
Environmental Engineers & Scientists
498 Seventh Aveune
New York, New York 10018

NEW YORK AMERICAN WATER

WILD OAKS GROUNDWATER WELL REPLACEMENT

CIVIL
LANDSCAPE PLAN

THE SCALE BAR SHOWN BELOW MEASURES ONE INCH LONG ON THE ORIGINAL DRAWING.

DATE OCTOBER 2015
H&S JOB NUMBER 90185-000
CONTRACT NUMBER -
DRAWING NUMBER C-2

File: O:\90185-000-NYC\DRAWINGS\WILD OAKS\CIVIL\C-2 Saved by mzahnow Save date: 9/30/2015 2:04 PM
XREFs: CK-SP-TP,ANSI D-IBLON-EC,DH-LS,ON-ST,ON-PP

EROSION AND SEDIMENT CONTROL (ESC) NOTES:

1. ALL EROSION CONTROL AND TREE PROTECTION MEASURES SHALL BE IN PLACE BEFORE, OR AS SOON AS PRACTICAL AFTER, ANY LAND CLEARING OR CONSTRUCTION ACTIVITIES BEGIN.
2. CLEARING SHALL BE LIMITED AS MUCH AS POSSIBLE TO AREAS REQUIRED FOR CURRENT CONSTRUCTION ACTIVITIES. MASS CLEARING AND GRADING SHALL BE AVOIDED.
3. ALL EROSION AND SEDIMENT CONTROL MEASURES SHALL BE INSPECTED WITHIN 24 HOURS FOLLOWING ALL RAINFALL EVENTS BUT IN NO CASE LESS THAN ONCE A WEEK.
4. CONTROL MEASURES SHALL BE REPAIRED OR REPLACED IMMEDIATELY AS REQUIRED TO MAINTAIN PERFORMANCE OF MEASURE. REMOVED SEDIMENT SHALL BE DISPOSED OF IN A SUCH A MANNER AS TO ENSURE FURTHER SEDIMENT TRANSPORT DOES NOT OCCUR.
5. CONTRACTOR SHALL INITIATE STABILIZATION MEASURES AS SOON AS PRACTICABLE IN PORTIONS OF THE SITE WHERE CONSTRUCTION ACTIVITIES HAVE TEMPORARILY OR PERMANENTLY CEASED, BUT IN NO CASE MORE THAN 7 DAYS AFTER THE CONSTRUCTION ACTIVITY IN THAT PORTION OF THE SITE HAS TEMPORARILY OR PERMANENTLY CEASED. THIS REQUIREMENT DOES NOT APPLY IN THE FOLLOWING INSTANCES:
   A. PRIOR TO GROUND FREEZING, ALL DISTURBED AREAS SHALL BE STABILIZED AND FURTHER SOIL DISTURBANCE ACTIVITIES SHALL BE CEASED UNTIL SUFFICIENT GROUND THAW HAS OCCURRED.
   B. WHERE CONSTRUCTION ACTIVITY ON A PORTION OF THE SITE IS TEMPORARILY CEASED, AND EARTH-DISTURBING ACTIVITIES WILL BE RESUMED WITHIN FOURTEEN (14) DAYS, TEMPORARY STABILIZATION MEASURES NEED NOT BE INITIATED ON THAT PORTION OF THE SITE.
   C. ALL DISTURBED AREAS, EXCEPT FOR CONCRETE AND PAVED AREAS SHALL BE FERTILIZED, SEEDED AND MULCHED IN ACCORDANCE WITH THE SPECIFICATIONS AND THE SEEDING SCHEDULE, AND RE-SEEDED AS NECESSARY, TO ESTABLISH AND MAINTAIN A VIGOROUS, DENSE VEGETATIVE COVER.
7. ALL POINTS OF CONSTRUCTION INGRESS AND EGRESS SHALL BE PROTECTED TO PREVENT THE DEPOSITION OF MATERIALS ONTO TRAVERSED PUBLIC THOROUGHFARE(S) BY MAINTAINING A STABILIZED CONSTRUCTION ENTRANCE, AND BY WASHING ALL VEHICLE WHEELS. ALL MATERIALS DEPOSITED ONTO PUBLIC THOROUGHFARE(S) SHALL BE REMOVED IMMEDIATELY. PROPER PRECAUTIONS SHALL BE TAKEN TO ENSURE THAT MATERIALS DEPOSITED ONTO PUBLIC THOROUGHFARE(S) ARE REMOVED SO THAT THEY DO NOT ENTER YARD INLETS, CATCH BASINS, STORM SEWERS, WETLANDS, SURFACE WATER BODIES, OR ROADSIDE SWALES.

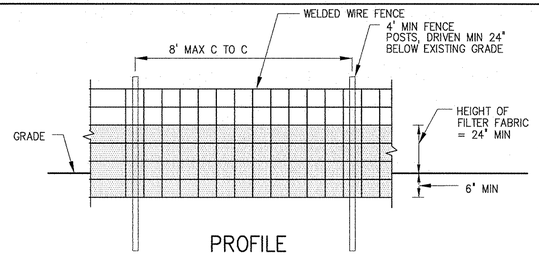

PROFILE

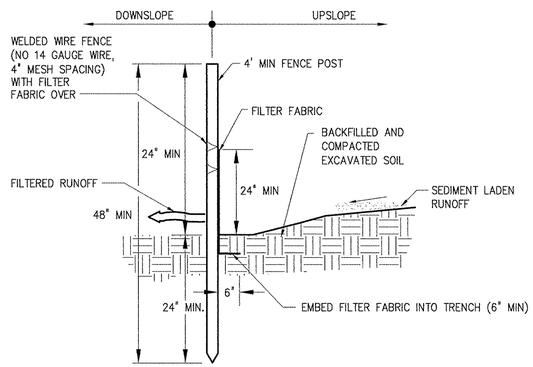

CROSS SECTION

NOTES:

1. WELDED WIRE FENCE TO BE FASTENED SECURELY TO FENCE POSTS WITH WIRE TIES. POSTS SHALL BE STEEL, EITHER 'T' OR 'U' TYPE OR 2 INCH SQUARE HARDWOOD.
2. FILTER FABRIC MUST BE SECURELY FASTENED TO THE POSTS USING A SYSTEM CONSISTING OF METAL FASTENERS (NAILS OR STAPLES) AND A HIGH STRENGTH REINFORCEMENT MATERIAL (NYLON WEBBING, GROMMETS, WASHERS, ETC.) PLACED BETWEEN THE FASTENER AND THE GEOTEXTILE FABRIC. THE FASTENING SYSTEM SHALL RESIST TEARING AWAY FROM THE POST. THE FABRIC SHALL INCORPORATE A DRAWSTRING IN THE TOP PORTION FOR ADDED STRENGTH.
3. WHEN TWO SECTIONS OF FILTER FABRIC ADJOIN EACH OTHER, THEY SHALL BE OVERLAPPED BY SIX INCHES AND FOLDED.
4. SEDIMENT SHALL BE REMOVED FROM THE UPSTREAM FACE OF THE FENCE WHEN IT HAS REACHED A DEPTH OF 1/2 THE BARRIER HEIGHT.
5. REPAIR OR REPLACE (FABRIC, POSTS, ETC.) WHEN DAMAGED.
6. FENCE SHALL BE INSPECTED DAILY FOR SIGN OF DETERIORATION AND SEDIMENT REMOVAL. MATERIAL SHALL BE REMOVED WHEN BULGES OR HOLES DEVELOP IN THE SILT FENCE, OR AS REQUIRED BY THE ENGINEER.
7.
8. MAXIMUM ALLOWABLE SLOPE LENGTHS CONTRIBUTING RUNOFF TO A SILT FENCE ARE:

SLOPE STEEPNESS	MAXIMUM SLOPE LENGTH (FT)
2:1	50
3:1	75
4:1	125
5:1	175
FLATTER THAN 5:1	200

9. MAXIMUM DRAINAGE AREA FOR OVERLAND FLOW TO A SILT FENCE SHALL NOT EXCEED 1 ACRE PER 100 FEET OF FENCE.

WARNING

IT IS A VIOLATION OF SECTION 7209.2 OF THE NEW YORK STATE EDUCATION LAW FOR ANY PERSON, UNLESS ACTING UNDER THE DIRECTION OF A LICENSED PROFESSIONAL ENGINEER, TO ALTER IN ANY WAY PLANS, SPECIFICATIONS, PLATS OR REPORTS TO WHICH THE SEAL OF A PROFESSIONAL ENGINEER HAS BEEN APPLIED. IF AN ITEM BEARING THE SEAL OF A PROFESSIONAL ENGINEER IS ALTERED, THE ALTERING ENGINEER SHALL AFFIX TO THE ITEM HIS SEAL AND THE NOTATION "ALTERED BY" FOLLOWED BY HIS SIGNATURE, THE DATE, AND A SPECIFIC DESCRIPTION OF THE ALTERATION.

REINFORCED SILT FENCE DETAIL

NOT TO SCALE

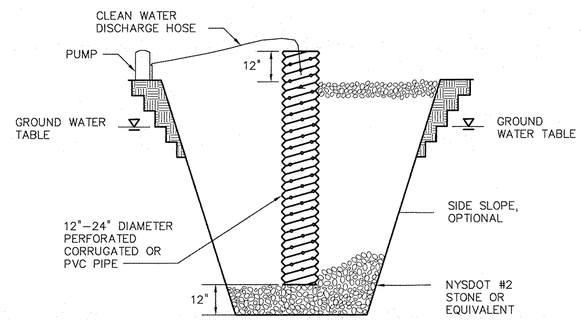

CONSTRUCTION SPECIFICATIONS

1. PIT DIMENSIONS SHOWN ARE OPTIONAL.
2. THE STANDPIPE SHOULD BE CONSTRUCTED BY PERFORATING A 12-24" DIAMETER
3. A BASE OF 2" AGGREGATE SHOULD BE PLACED IN THE PIT TO A DEPTH OF 12". AFTER INSTALLING THE STANDPIPE, THE PIT SURROUNDING THE STANDPIPE SHOULD BE BACKFILLED WITH 2" AGGREGATE. CORRUGATED OR PVC PIPE.
4. THE STANDPIPE SHOULD EXTEND 12-18" ABOVE THE LIP OF THE PIT.
5. IF DISCHARGE WILL BE PUMPED DIRECTLY TO A STORM DRAINAGE SYSTEM, THE STANDPIPE SHOULD BE WRAPPED WITH FILTERCLOTH BEFORE INSTALLATION. IF DESIRED, 1/4"-1/2" HARDWARE CLOTH MAY BE PLACED AROUND THE STANDPIPE, PRIOR TO ATTACHING THE FILTERCLOTH.

SUMP PIT DETAIL

NOT TO SCALE

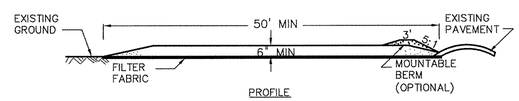

PROFILE

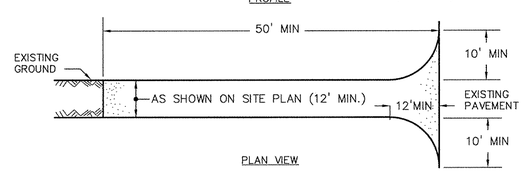

PLAN VIEW

NOTES:

1. STONE SIZE - USE NYSDOT SIZE NO. 3 COARSE AGGREGATE, OR RECLAIMED OR RECYCLED CONCRETE EQUIVALENT.
2. LENGTH - NOT LESS THAN 50 FEET (EXCEPT ON A SINGLE RESIDENCE LOT WHERE A 30 FOOT MINIMUM LENGTH WOULD APPLY).
3. THICKNESS - NOT LESS THAN SIX (6) INCHES.
4. WIDTH - TWELVE (12) FOOT MINIMUM, BUT NOT LESS THAN THE FULL WIDTH AT POINTS WHERE INGRESS OR EGRESS OCCURS. TWENTY-FOUR (24) FOOT IF SINGLE ENTRANCE TO SITE.
5. FILTER FABRIC - SHALL BE PLACED OVER THE ENTIRE AREA PRIOR TO PLACING OF STONE.
6. SURFACE WATER - ALL SURFACE WATER FLOWING OR DIVERTED TOWARD CONSTRUCTION ENTRANCES SHALL BE PIPED ACROSS THE ENTRANCE. IF PIPING IS IMPRACTICAL, A MOUNTABLE BERM WITH 5:1 SLOPES WILL BE PERMITTED.
7. MAINTENANCE - THE ENTRANCE SHALL BE MAINTAINED IN A CONDITION WHICH WILL PREVENT TRACKING OR FLOWING OF SEDIMENT ONTO PUBLIC RIGHTS-OF-WAY, ALL SEDIMENT SPILLED, DROPPED, WASHED OR TRACKED ONTO PUBLIC RIGHTS-OF-WAY MUST BE REMOVED IMMEDIATELY.
8. WHEN WASHING IS REQUIRED, IT SHALL BE DONE ON AN AREA STABILIZED WITH STONE AND WHICH DRAINS INTO AN APPROVED SEDIMENT TRAPPING DEVICE.
9. PERIODIC INSPECTION AND NEEDED MAINTENANCE SHALL BE PROVIDED AFTER EACH RAIN.

STABILIZED CONSTRUCTION ENTRANCE DETAIL

NOT TO SCALE

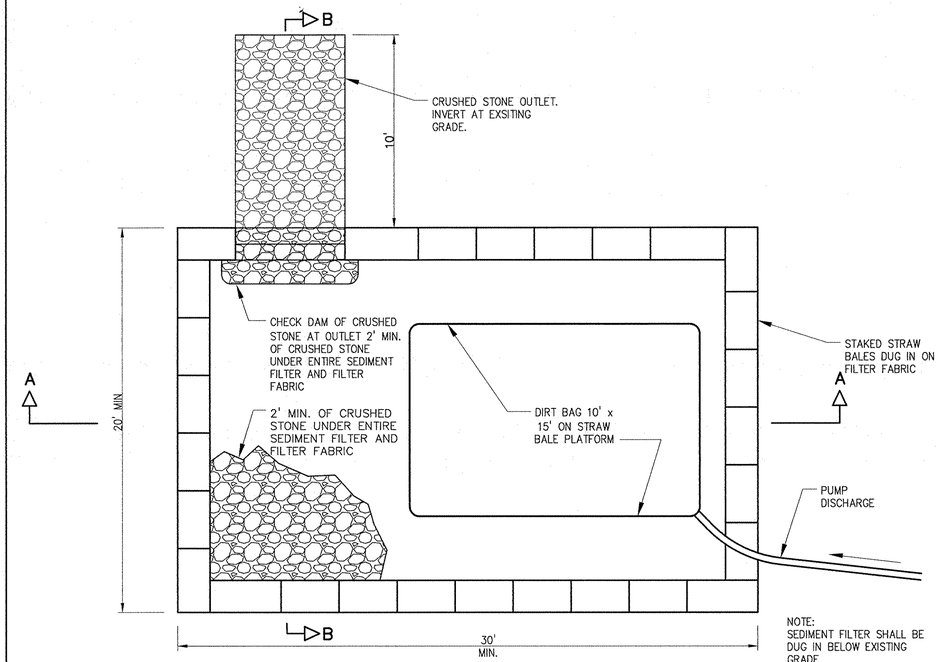

NOTE:
SEDIMENT FILTER SHALL BE DUG IN BELOW EXISTING GRADE

PLAN

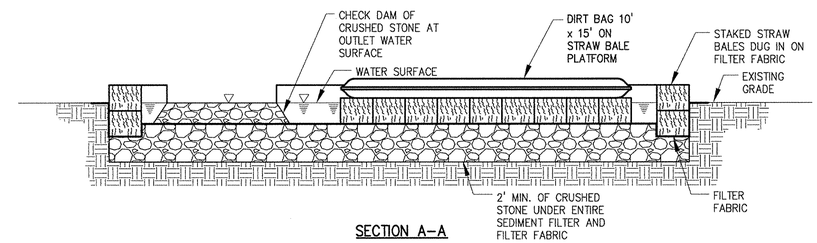

SECTION A-A

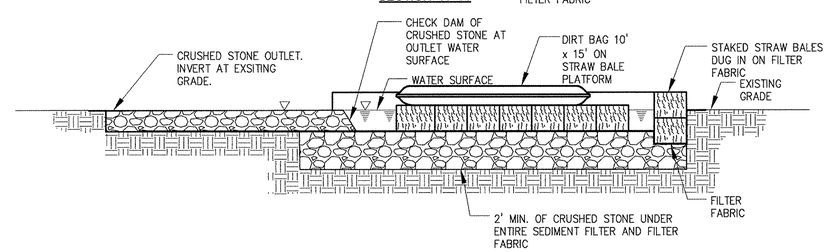

SECTION B-B

SEDIMENT TRAP DETAIL

NOT TO SCALE

BID SET

NO.	ISSUED FOR	DATE	BY
A	BID SET	OCT 2015	KLB

DESIGNED MZ
DRAWN MZ
CHECKED KLB
PROJ.ENGR. OT
PROJ.DIR. REP

STATE OF NEW YORK · RICHARD EDWARD FERS · LICENSED PROFESSIONAL ENGINEER

HAZEN AND SAWYER
Environmental Engineers & Scientists
498 Seventh Aveune
New York, New York 10018

NEW YORK AMERICAN WATER

WILD OAKS GROUNDWATER WELL REPLACEMENT

EROSION AND SEDIMENT CONTROL DETAILS

THE SCALE BAR SHOWN BELOW MEASURES ONE INCH LONG ON THE ORIGINAL DRAWING.

DATE OCTOBER 2015
H&S JOB NUMBER 90185-000
CONTRACT NUMBER -
DRAWING NUMBER C-3

File: G:\90185-000-NYC\DRAWINGS\WILD OAKS\CIVIL\C-3 Saved by jbauer Save date: 9/22/2015 8:52 AM

XREFs= ANSI D-TB,DET_ESC_Silt Fence,DET_EXC_Const Entrance,DET_Well,DET_TRENCH-Typical,DET_SITE-Before,DET_EXC_Sump Pit,DET_EXC_Dirt Bag

FOR GRAVEL ROADWAY

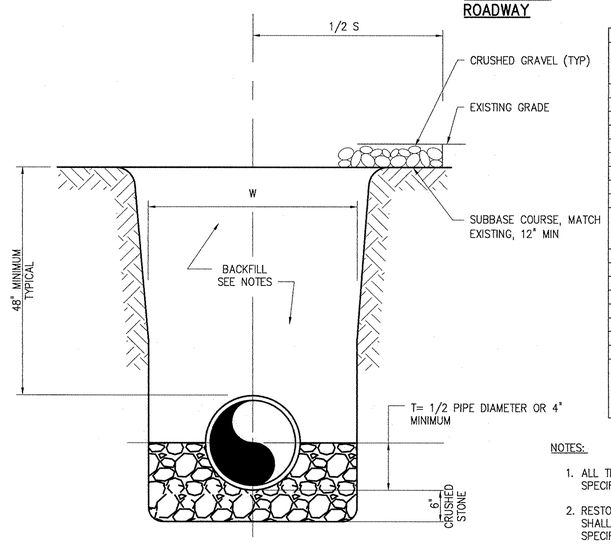

TRENCH EXCAVATION LIMITS		
INTERNAL DIAMETER OF PIPE	W WIDTH OF TRENCH	
	MAX	W=MIN
4"–6"	3'–9"	2'–0"
8"–10"	3'–9"	2'–2"
12"	3'–9"	O.D.+2'
14"–16"	4'–2"	O.D.+2'
18"	4'–4"	O.D.+2'
20',21"	4'–8"	O.D.+2'
24"	4'–11"	O.D.+2'
27"	5'–9"	O.D.+2'
30"	6'–7"	O.D.+2'
DEPTH OF CUT	S MAXIMUM PAVEMENT REPLACEMENT WIDTH	
0–6'	S=W+4'	
>6–8'	S=W+8'	
>8–10'	S=W+12'	
>10–12'	S=W+16'	
>12–14'	S=W+20'	
>14–16'	S=W+24'	
>16–18'	S=W+28'	
>18'	S=W+32'	
W = TRENCH WIDTH AT BOTTOM OF PIPE. TRENCH SIDE SLOPES SHALL BE IN ACCORDANCE WITH OSHA REQUIREMENTS.		

NOTES:

1. ALL TRENCHES SHALL BE BACKFILLED WITH FILL AS PER SPECIFICATIONS.
2. RESTORATION OF GRAVEL ROADWAY AND GRASS AREAS SHALL BE IN ACCORDANCE WITH THE DETAIL SPECIFICATIONS.

TYPICAL TRENCH

NOT TO SCALE

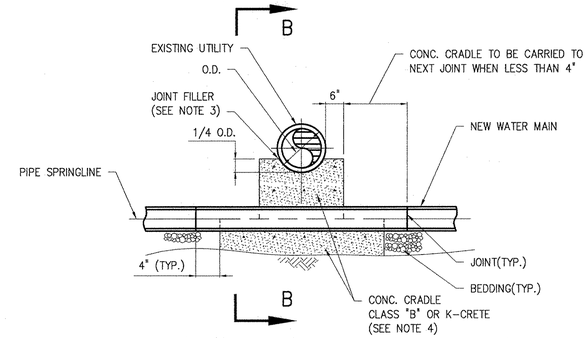

PLAN VIEW

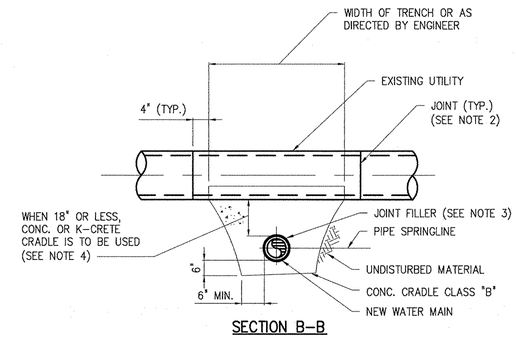

SECTION B–B

NOTES:

1. IF LESS THAN 18" CLEARANCE, WESTCHESTER COUNTY DEPARTMENT OF HEALTH APPROVAL WILL BE REQUIRED.
2. ARRANGE SO NEITHER NEW OR EXISTING PIPE HAS JOINT IN CONTACT WITH CONCRETE.
3. JUTE OR SIMILAR BITUMINOUS IMPREGNATED JOINT FILLER SHALL BE INSTALLED BETWEEN BOTH PIPES AND CONCRETE.
4. IF 10' OF HORIZONTAL SEPARATION OR 18" VERTICAL SEPARATION CANNOT BE MADE, THE CONTRACTOR WILL ENCASE THE NEW WATER MAIN IN K–CRETE. WHERE THE DISTANCE IS LESS THAN 5 FEET THE NEW WATER MAIN CAN BE ENCASED IN CLASS "B" CONCRETE.

NEW PIPE UNDER EXIST. UTILITIES

NOT TO SCALE

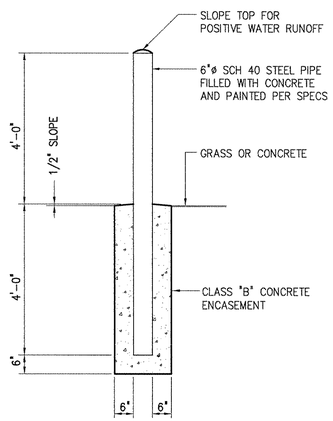

BOLLARD DETAIL

NOT TO SCALE

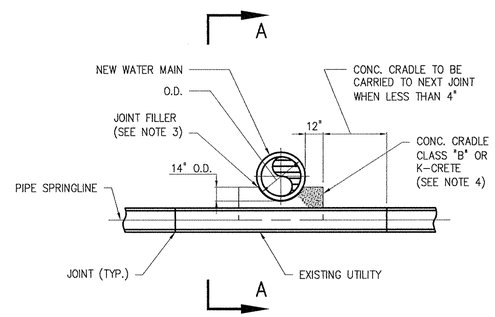

PLAN VIEW

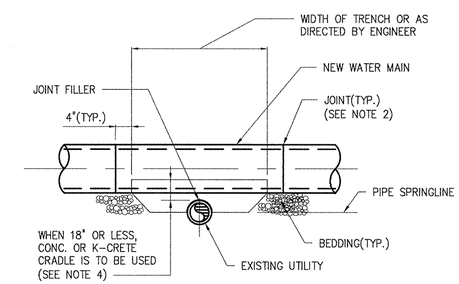

SECTION A–A

NOTES:

1. IF LESS THAN 18" CLEARANCE, WESTCHESTER COUNTY DEPARTMENT OF HEALTH APPROVAL WILL BE REQUIRED.
2. ARRANGE SO NEITHER NEW OR EXISTING PIPE HAS JOINT IN CONTACT WITH CONCRETE.
3. JUTE OR SIMILAR BITUMINOUS IMPREGNATED JOINT FILLER SHALL BE INSTALLED BETWEEN BOTH PIPES AND CONCRETE.
4. IF 10' OF HORIZONTAL SEPARATION OR 18" VERTICAL SEPARATION CANNOT BE MADE, THE CONTRACTOR WILL ENCASE THE NEW WATER MAIN IN K–CRETE. WHERE THE DISTANCE IS LESS THAN 5 FEET THE NEW WATER MAIN CAN BE ENCASED IN CLASS "B" CONCRETE.

NEW PIPE OVER EXIST. UTILITY

NOT TO SCALE

BID SET

WARNING

IT IS A VIOLATION OF SECTION 7209.2 OF THE NEW YORK STATE EDUCATION LAW FOR ANY PERSON, UNLESS ACTING UNDER THE DIRECTION OF A LICENSED PROFESSIONAL ENGINEER, TO ALTER IN ANY WAY PLANS, SPECIFICATIONS, PLATS OR REPORTS TO WHICH THE SEAL OF A PROFESSIONAL ENGINEER HAS BEEN APPLIED. IF AN ITEM BEARING THE SEAL OF A PROFESSIONAL ENGINEER IS ALTERED, THE ALTERING ENGINEER SHALL AFFIX TO THE ITEM HIS SEAL AND THE NOTATION "ALTERED BY" FOLLOWED BY HIS SIGNATURE, THE DATE, AND A SPECIFIC DESCRIPTION OF THE ALTERATION.

NO.	ISSUED FOR	DATE	BY
A	BID SET	OCT 2015	KLB

DESIGNED MZ
DRAWN MZ
CHECKED KLB
PROJ.ENGR. OT
PROJ.DIR. REP

STATE OF NEW YORK · RICHARD EDWARD PETERS · 065961 · LICENSED PROFESSIONAL ENGINEER

HAZEN AND SAWYER
Environmental Engineers & Scientists
498 Seventh Aveune
New York, New York 10018

NEW YORK AMERICAN WATER

WILD OAKS GROUNDWATER WELL REPLACEMENT

CIVIL DETAILS

THE SCALE BAR SHOWN BELOW MEASURES ONE INCH LONG ON THE ORIGINAL DRAWING.

DATE OCTOBER 2015
H&S JOB NUMBER 90185-000
CONTRACT NUMBER -
DRAWING NUMBER C-4

File: O:\90185-000-NYC\DRAWINGS\WILD OAKS\CIVIL\C-4 Saved by jbauer Save date: 9/22/2015 8:53 AM

XREFs: ANSI D-TB,DET_ESC_SH1 Fence,DET_EXC_Const Entrance,DET_Well,DET_TRENCH-Typical,DET_SITE-Bollard,DET-WM-NewPipeOver-UnderEX

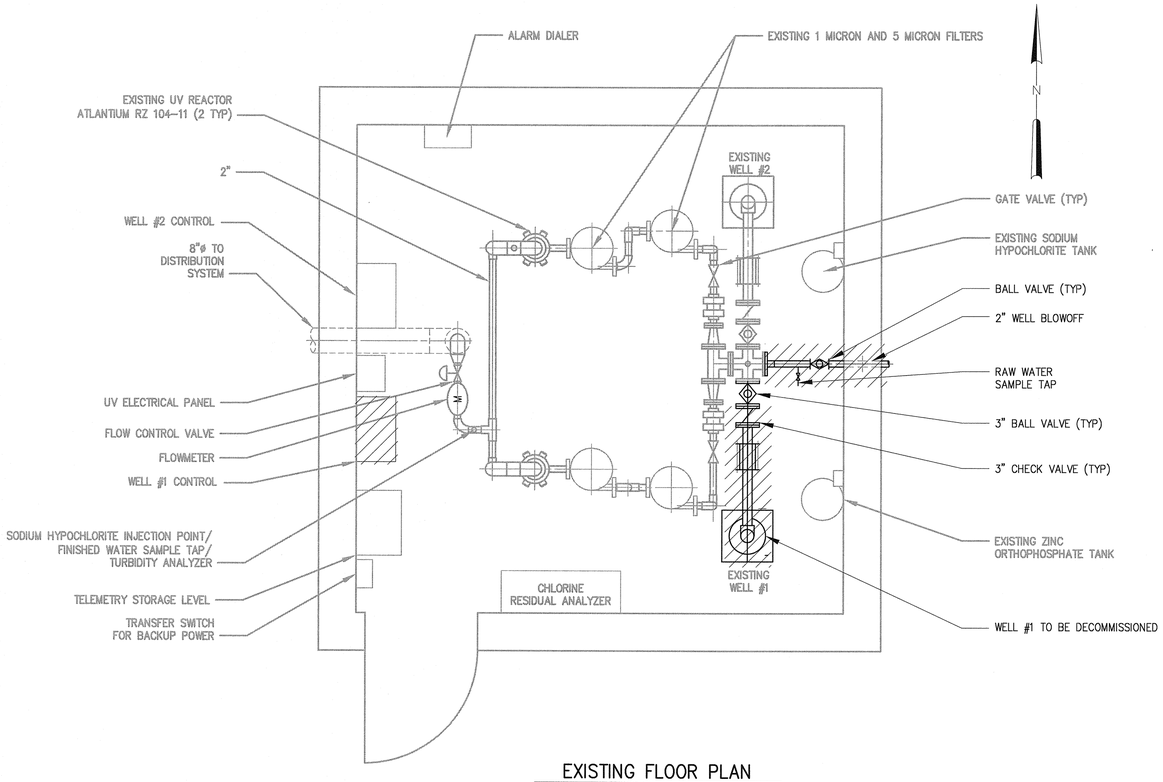

EXISTING FLOOR PLAN

1/2"=1'-0"

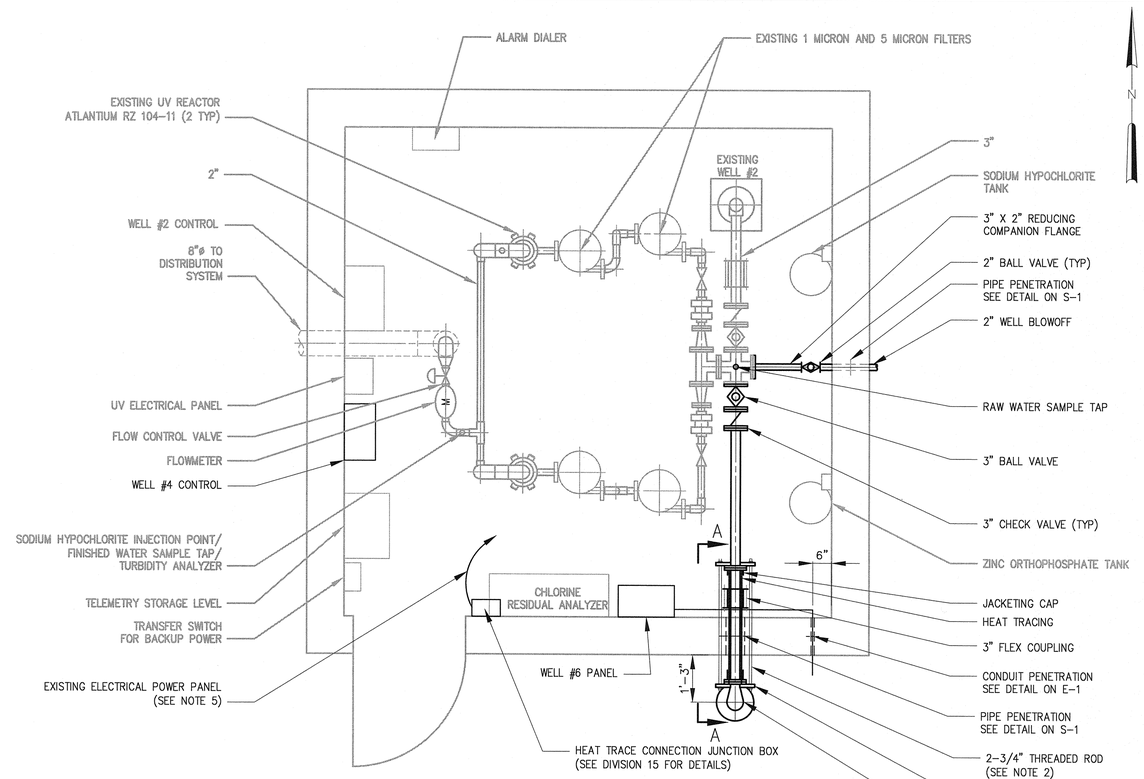

PROPOSED FLOOR PLAN

1/2"=1'-0"

NOTES:

1. CONTRACTOR SHALL FIELD VERIFY ALL DIMENSION.
2. THREADED ROD AND TAB SHALL BE ASTM A36.
3. CONTRACTOR SHALL PROVIDE 208V POWER SUPPLY TO HEAT TRACE CONNECTION JUNCTIONS BOX BY FURNISHING AND INSTALLING NEW BREAKERS IN AVAILABLE SPACE OF EXISTING 208/120V POWER PANEL LOCATED IN WELL HOUSE BUILDING. CONTRACTOR SHALL FURNISH AND INSTALL ONE (1) NEW 20 AMP 2-POLE BREAKER IN EXISTING POWER PANEL.
4. ALL POWER CONDUITS ARE SHOWN DIAGRAMMATICALLY EXACT RUNS SHALL BE DETERMINED BY THE ELECTRICAL CONTRACTOR IN THE FIELD.
5. CONTRACTOR SHALL RUN ONE (1) 3/4" C RGS, 2#12 & 1#12 GND.

LEGEND:

DEMOLITION

DEMOLITION NOTES:

1. SUBMIT FOR APPROVAL PROCEDURE FOR DEMOLITION OF OPERATIONALLY CRITICAL ITEMS WHICH MUST BE CAREFULLY PLANNED WITH INSTALLATION OF NEW EQUIPMENT IN ORDER TO MINIMIZE SHUTDOWNS. REFER TO SECTION 01520.
2. CONTRACTOR IS RESPONSIBLE FOR REMOVAL AND DISPOSAL OF ALL ITEMS INDICATED FOR DEMOLITION EXCEPT WHERE NOTED.

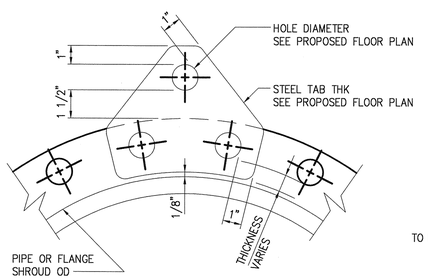

STEEL TAB

NOT TO SCALE

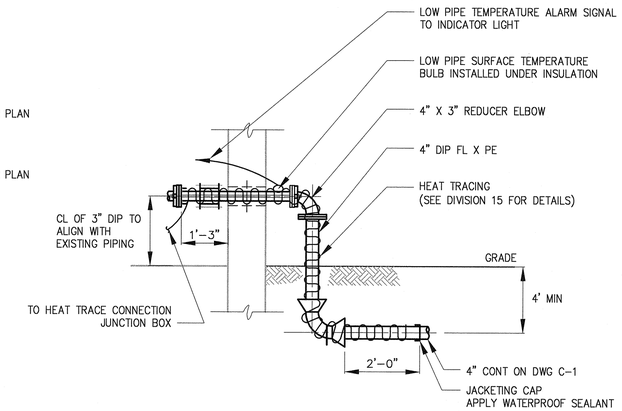

SECTION A – A

NOT TO SCALE

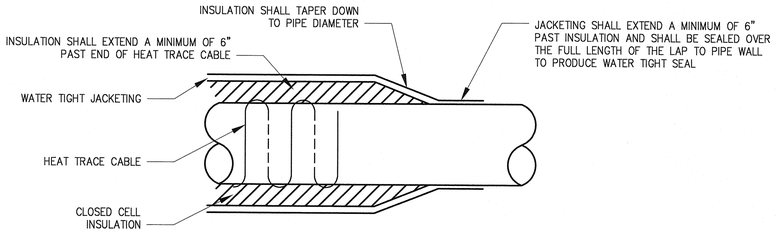

HEAT TRACE INSULATION TERMINATION DETAIL

NOT TO SCALE

1/2"=1'-0" 12" 0 1 3'

WCDOH REVIEW

WARNING

IT IS A VIOLATION OF SECTION 7209.2 OF THE NEW YORK STATE EDUCATION LAW FOR ANY PERSON, UNLESS ACTING UNDER THE DIRECTION OF A LICENSED PROFESSIONAL ENGINEER, TO ALTER IN ANY WAY PLANS, SPECIFICATIONS, PLATS OR REPORTS TO WHICH THE SEAL OF A PROFESSIONAL ENGINEER HAS BEEN APPLIED. IF AN ITEM BEARING THE SEAL OF A PROFESSIONAL ENGINEER IS ALTERED, THE ALTERING ENGINEER SHALL AFFIX TO THE ITEM HIS SEAL AND THE NOTATION "ALTERED BY" FOLLOWED BY HIS SIGNATURE, THE DATE, AND A SPECIFIC DESCRIPTION OF THE ALTERATION.

NO.	ISSUED FOR	DATE	BY
B	WCDOH REVISIONS PUMP 6	AUG 2016	KLB
A	BID SET	OCT 2015	KLB

DESIGNED KLB
DRAWN JFB/BAC
CHECKED KLB
PROJ.ENGR. KLB
PROJ.DIR. REP

STATE OF NEW YORK · RICHARD EDWARD PETERS · 086146 · LICENSED PROFESSIONAL ENGINEER

HAZEN AND SAWYER
Environmental Engineers & Scientists
498 Seventh Aveune
New York, New York 10018

NEW YORK AMERICAN WATER

WILD OAKS GROUNDWATER WELL REPLACEMENT

MECHANICAL FLOOR PLAN

THE SCALE BAR SHOWN BELOW MEASURES ONE INCH LONG ON THE ORIGINAL DRAWING.

DATE OCTOBER 2015
H&S JOB NUMBER 90185-000
CONTRACT NUMBER -
DRAWING NUMBER M-1

File: G:\90185-000-NYC\DRAWINGS\WILD OAKS\MECH\M-1B Saved by bcasull Save date: 8/5/2016 3:18 PM

XREF= ANSI D-TB - 08042016 REISSUE,TB-PT-S,TB-PT-M,TB-SCI-M

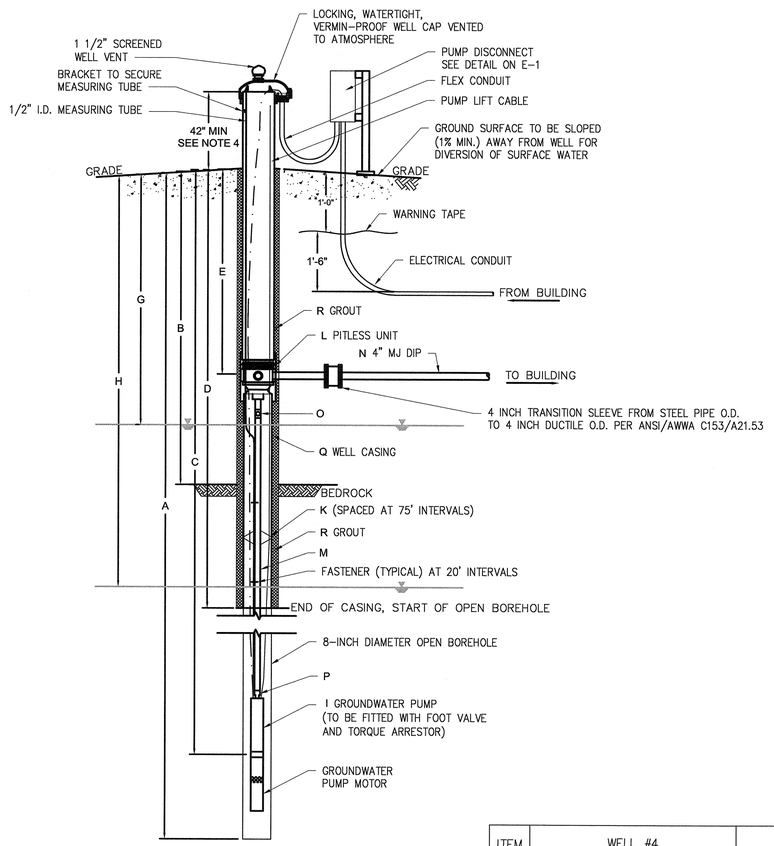

STANDARD WELL PROFILE

NOT TO SCALE

NOTES:
1. TBD: TO BE DETERMINED
2. FT BG: FEET BELOW GRADE
3. A TORQUE ARRESTOR SHALL BE INSTALLED ON THE RISER PIPE IMMEDIATELY ABOVE THE PUMP TO MINIMIZE MOVEMENT OF THE PUMP AND RISER PIPE WHEN THE PUMP STARTS.
4. PERMANENT CASING FOR ALL GROUNDWATER SOURCES SHALL PROJECT AT LEAST 42" INCHES ABOVE GROUND SURFACE.
5. HISTORIC FLOOD LEVEL AT THE WILD OAKS SITE IS WITHIN 1 FT ABOVE FINISHED FLOOR ELEVATION AT THE WELL HOUSE.

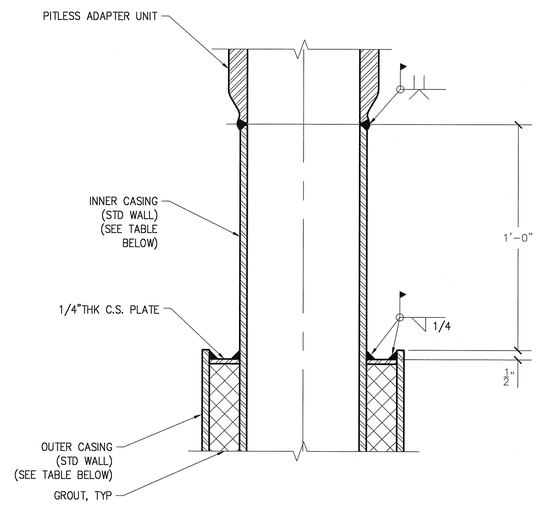

PITLESS ADAPTER CONNECTION DETAIL

NOT TO SCALE

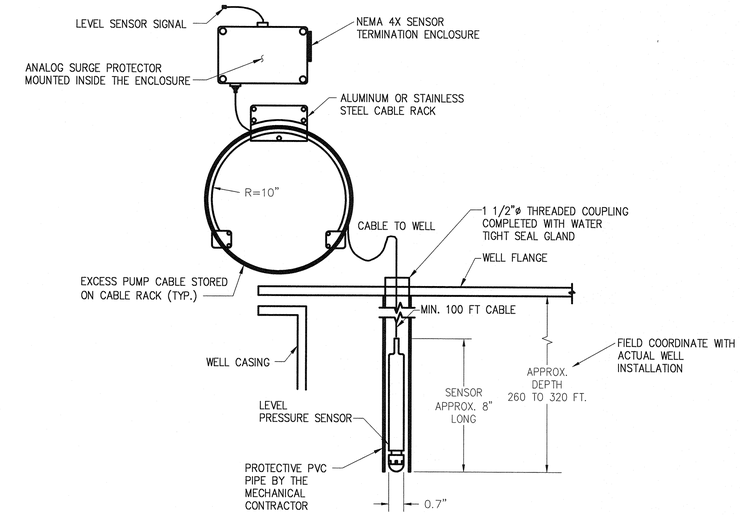

DRAWDOWN LEVEL / PRESSURE SENSOR

NOT TO SCALE

NOTES:

1. THIS PITLESS UNIT SHALL CONFORM TO THE STANDARDS FOR WATER WORKS. THIS UNIT WILL BE COMPLETELY ASSEMBLED AND TESTED BEFORE SHIPPING. MAXIMUM RATED DISCHARGE PRESSURE IS 300 PSI.
2. WELL CAP ASSEMBLY SHALL ACCOMMODATE TWO 1-INCH PVC PROBES. ONE FOR PRESSURE INSTRUMENT INSTALLATION AND ONE FOR MANUAL WATER LEVEL MEASUREMENT.
3. PROVIDE NFS61 APPROVED EPOXY COATING.
4. PROVIDE SEALED ELECTRICAL CONDUIT CONNECTIONS.

ITEM	WELL #4	WELL #6	COMMENTS
A	425	420	TOTAL DEPTH OF WELL (FT BG)
B	54	50	DEPTH TO BEDROCK (FT BG)
C	360	365	PUMP PLACEMENT DEPTH (FT BG)
D	54' (12" CASING) 104' (8" CASING)	38' (12" CASING) 100' (8" CASING)	DEPTH OF CASING MINIMUM 50 FT BG OR 10 FT INTO BEDROCK IF DEPTH BEDROCK IS GREATER THAN 50 FT
E	4.5	4.5	DEPTH OF PITLESS CONNECTION (FT BG)
F	MINIMUM 1.5 SEE NOTE 4	MINIMUM 1.5 SEE NOTE 4	HEIGHT OF WELL CAP ABOVE GRADE (FT)
G	0 (ARTESIAN)	0 (ARTESIAN)	STATIC WATER LEVEL (FT BG)
H	320	260	PUMPING WATER LEVEL (FT BG)
I	SEE PUMP DATA TABLE	SEE PUMP DATA TABLE	SUBMERSIBLE PUMP, MANUFACTURER AND MODEL
J	SEE PUMP DATA TABLE	SEE PUMP DATA TABLE	PUMP DESIGN FLOW AND TOTAL DYNAMIC HEAD
K	- -	- -	CENTRALIZER, MANUFACTURER AND MODEL
L	BAKER MONITOR	BAKER MONITOR	PITLESS CONNECTION, MANUFACTURER AND MODEL
M	3"	3"	RISER PIPE DIAMETER
N	4"	4"	DISCHARGE PIPE DIAMETER
O	YES	YES	CHECK VALVE
P	YES	YES	REDUCER
Q	8-INCH	8-INCH	CASING DIAMETER
R	BOTTOM OF WELL CASING TO GRADE	BOTTOM OF WELL CASING TO GRADE	GROUT

PUMP DATA TABLE

NAME	MANUFACTURER	MODEL	FLOW (gpm)	TDH (ft)	SPEED (rpm)	HORSEPOWER	USE
WELL #4 SUBMERSIBLE PUMP	GRUNDFOS	85S200	80	610	3600	20 HP	PUMPS FROM GOUNDWATER WELL TO TREATMENT AND DISTRIBUTION
WELL #6 SUBMERSIBLE PUMP	GRUNDFOS	855200	80	550	3600	20 HP	PUMPS FROM GROUNDWATER WELL TO TREATMENT AND DISTRIBUTION

WARNING
IT IS A VIOLATION OF SECTION 7209.2 OF THE NEW YORK STATE EDUCATION LAW FOR ANY PERSON, UNLESS ACTING UNDER THE DIRECTION OF A LICENSED PROFESSIONAL ENGINEER, TO ALTER IN ANY WAY PLANS, SPECIFICATIONS, PLATS OR REPORTS TO WHICH THE SEAL OF A PROFESSIONAL ENGINEER HAS BEEN APPLIED. IF AN ITEM BEARING THE SEAL OF A PROFESSIONAL ENGINEER IS ALTERED, THE ALTERING ENGINEER SHALL AFFIX TO THE ITEM HIS SEAL AND THE NOTATION "ALTERED BY" FOLLOWED BY HIS SIGNATURE, THE DATE, AND A SPECIFIC DESCRIPTION OF THE ALTERATION.

NO.	ISSUED FOR	DATE	BY
B	WCDOH REVISIONS PUMP 6	AUG 2016	KLB
A	BID SET	OCT 2015	KLB

DESIGNED KLB
DRAWN JFB/BAC
CHECKED KLB
PROJ.ENGR. KLB
PROJ.DIR. REP

STATE OF NEW YORK · RICHARD EDWARD PERRIN · No. 081567 · LICENSED PROFESSIONAL ENGINEER

HAZEN AND SAWYER
Environmental Engineers & Scientists
498 Seventh Aveune
New York, New York 10018

NEW YORK AMERICAN WATER

WILD OAKS GROUNDWATER WELL REPLACEMENT

MECHANICAL PUMP SCHEDULE AND MISCELLANEOUS DETAILS

THE SCALE BAR SHOWN BELOW MEASURES ONE INCH LONG ON THE ORIGINAL DRAWING.

DATE OCTOBER 2015
H&S JOB NUMBER 90185-000
CONTRACT NUMBER -
DRAWING NUMBER M-2

WCDOH REVIEW

File: O:\90185-000-NYC\DRAWINGS\WILD OAKS\MECH\W-28 Saved by bcasull Save date: 8/5/2016 3:17 PM

XREF= ANSI D-TB - 08042016 REISSUE,DET_Well

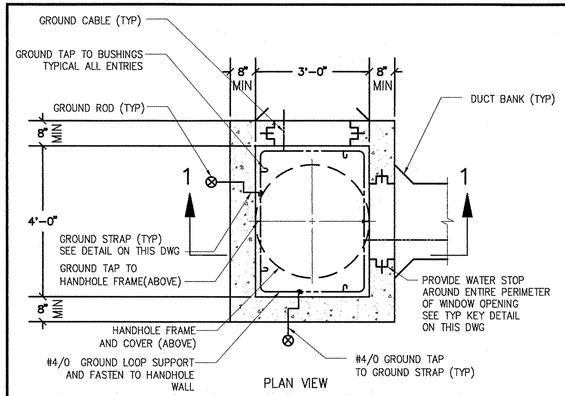

ELECTRICAL HANDHOLE DETAIL

NOT TO SCALE

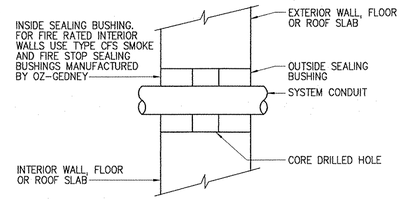

TYPICAL CONDUIT THRU WALL, FLOOR OR ROOF SLABS EXISTING CONSTRUCTION

NOT TO SCALE

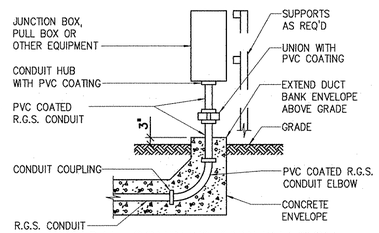

TYPICAL CONDUIT TERMINATION AT OUTDOOR EQUIPMENT

NOT TO SCALE

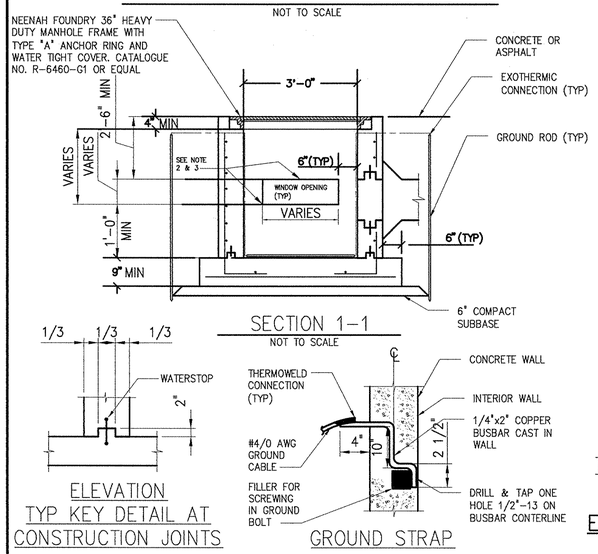

SECTION 1-1

NOT TO SCALE

ELEVATION TYP KEY DETAIL AT CONSTRUCTION JOINTS

GROUND STRAP

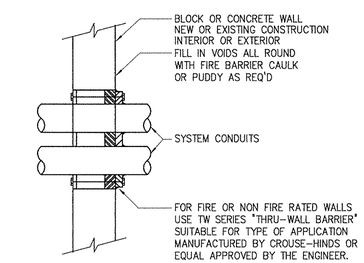

TYPICAL THRU WALL CONDUIT BANK

NOT TO SCALE

ELECTRICAL DETAILS

ELECTRICAL HAND HOLE NOTES:

1. WATERPROOFING ELECTRICAL HANDHOLES SHALL BE IN ACCORDANCE WITH SPECIFICATION 16134.
2. HANDHOLE WINDOW OPENINGS SIZES SHALL BE BASED ON DUCTBANK/CONDUIT CONFIGURATIONS. THE LOCATION AND ELEVATION OF THE DUCTBANK/CONDUIT ENTERING THE HANDHOLE SHALL BE DETERMINED BY THE CONTRACTOR BASED ON ACTUAL FIELD CONDITIONS.
3. WINDOW DIMENSIONS MAY VARY BASED ON ACTUAL DUCTBANK/CONDUIT ELEVATION AND POINT OF PENETRATION INTO HANDHOLE.
4. AFTER INSTALLATION OF THE HANDHOLES, THE CONTRACTOR SHALL BE RESPONSIBLE FOR SEALING ALL WATER LEAKS THAT MAY OCCUR DUE TO INSTALLATION OF DUCTBANK/CONDUITS THRU WINDOW OPENINGS AND WATER LEAKS AT CONSTRUCTION JOINTS.
5. FOR NOTES ON STRUCTURAL ELEMENTS SEE GENERAL STRUCTURAL NOTES AND STANDARD DETAILS ON STRUCTURAL DRAWINGS.
6. ALL HANDHOLES COVERS SHALL BE OF HEAVY DUTY CASTINGS SUITABLE FOR HIGHWAY TRAFFIC WITH H20 WHEEL LOADS AND 30% IMPACT ALLOWANCE.
7. ADJUST GROUND ROD LENGTH AND NUMBERS AS NECESSARY TO MEET GROUNDING REQUIREMENTS.
8. WALL AND SLAB THICKNESS AND REINFORCING SHOWN ARE CONCEPTUAL ACTUAL CONFIGURATIONS SHALL BE DETERMINED BY THE CONTRACTOR IN ACCORDANCE WITH SPECIFICATION 16134.
9. ELECTRICAL HANDHOLE LOCATIONS REQUIRING A CHIMNEY SHALL BE COORDINATED WITH CIVIL, HANDHOLE COVER SHALL BE FLUSH WITH GRADE.

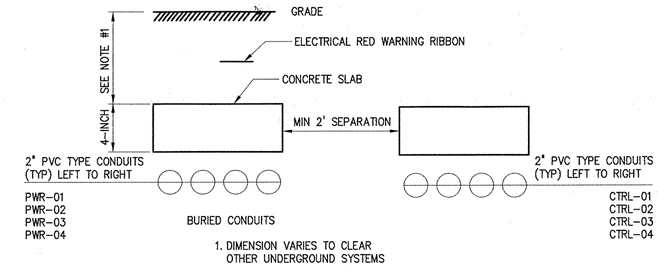

SECTION A – A

NOT TO SCALE

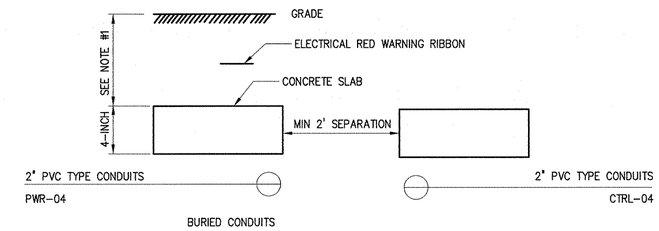

SECTION B – B

NOT TO SCALE

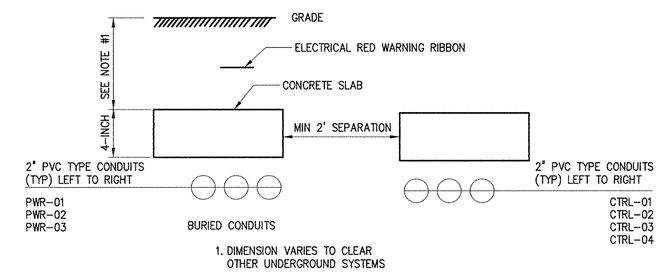

SECTION C – C

NOT TO SCALE

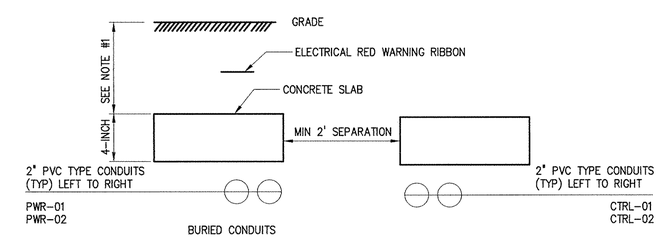

SECTION D – D

NOT TO SCALE

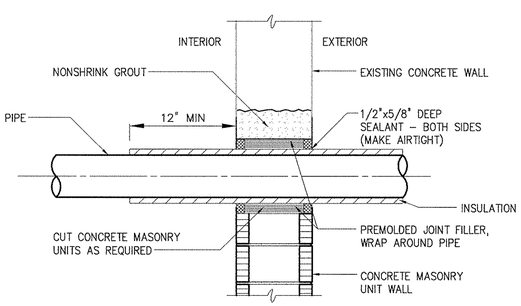

WALL PENETRATION

NOT TO SCALE

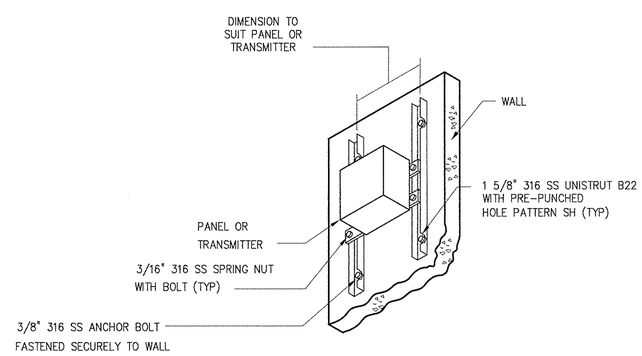

WALL MOUNTING SUPPORT FOR PANEL OR TRANSMITTER

NOTES:
FOR CABLE AND CONDUIT SCHEDULE SEE DRAWING E-1

WARNING
IT IS A VIOLATION OF SECTION 7209.2 OF THE NEW YORK STATE EDUCATION LAW FOR ANY PERSON, UNLESS ACTING UNDER THE DIRECTION OF A LICENSED PROFESSIONAL ENGINEER, TO ALTER IN ANY WAY PLANS, SPECIFICATIONS, PLATS OR REPORTS TO WHICH THE SEAL OF A PROFESSIONAL ENGINEER HAS BEEN APPLIED. IF AN ITEM BEARING THE SEAL OF A PROFESSIONAL ENGINEER IS ALTERED, THE ALTERING ENGINEER SHALL AFFIX TO THE ITEM HIS SEAL AND THE NOTATION "ALTERED BY" FOLLOWED BY HIS SIGNATURE, THE DATE, AND A SPECIFIC DESCRIPTION OF THE ALTERATION.

BID SET

NO.	ISSUED FOR	DATE	BY
A	BID SET	OCT 2015	KLB

DESIGNED DK
DRAWN JFB
CHECKED KLB
PROJ.ENGR. OT
PROJ.DIR. REP

STATE OF NEW YORK · RICHARD EDWARD PEERS · LICENSED PROFESSIONAL ENGINEER

HAZEN AND SAWYER
Environmental Engineers & Scientists
498 Seventh Aveune
New York, New York 10018

NEW YORK AMERICAN WATER

WILD OAKS GROUNDWATER WELL REPLACEMENT

STRUCTURAL DETAILS

THE SCALE BAR SHOWN BELOW MEASURES ONE INCH LONG ON THE ORIGINAL DRAWING.

DATE OCTOBER 2015
H&S JOB NUMBER 90185-000
CONTRACT NUMBER -
DRAWING NUMBER S-1

File: O:\90185-000-NYC\DRAWINGS\WILD OAKS\STRUCS-1 Saved by jbauer Save date: 9/22/2015 8:48 AM
PLOT DATE: 10/19/2015 11:03 AM BY: JBAUER
XREFs= AN2 D-TB

GENERAL NOTES

1. DRAWINGS ARE DIAGRAMMATIC AND INDICATE GENERAL ARRANGEMENT OF SYSTEMS AND WORK. FOLLOW DRAWINGS IN LAYING OUT WORK AND CHECK DRAWINGS OF OTHER TRADES TO VERIFY SPACE CONDITIONS. MAINTAIN HEADROOM AND PROJECT SPACE CONDITIONS CONSISTENT WITH PROJECT AREA.
2. THE ROUTING AND LOCATION OF CONDUIT RUNS ARE GENERALLY NOT DIMENSIONAL ON THE DRAWINGS BUT SHALL BE DETERMINED IN THE FIELD SUIT THE LOCATIONS OF EQUIPMENT, TO CONFORM TO CIVIL AND MECHANICAL FEATURES AND TO AVOID INTERFERENCES.
3. ALL EXPOSED CONDUIT SHALL BE RUN PARALLEL TO BUILDING WALLS AND BEAMS EXCEPT WHERE OTHERWISE SHOWN ON PLAN.
4. EXPOSED CONDUIT SHALL BE SUPPORTED FROM WALLS AND/OR CEILING BY APPROVED HANGERS OF ANGLE OR CHANNEL CONSTRUCTION.
5. EXPANSION FITTINGS SHALL BE FURNISHED AND INSTALLED WHERE CONDUITS EXPOSED OR CONCEALED PASS THROUGH STRUCTURAL JOINTS. OZ/GEDNEY TYPE "EX" FOR EXPOSED AND TYPE "DX" FOR CONCEALED OR APPROVED EQUAL.
6. EXACT CONDUIT STUB-UP LOCATIONS ARE TO BE DETERMINED BY THE ELECTRICAL CONTRACTOR BASED ON THE CERTIFIED MANUFACTURER'S DRAWINGS OF THE RESPECTIVE EQUIPMENT. CONDUITS SHALL BE INSTALLED TO AGREE WITH THE EQUIPMENT FURNISHED.
7. CONDUIT FOR POWER AND LIGHTING PASSING THROUGH CONCRETE FLOORS OR WALLS BELOW GRADE SHALL BE INSTALLED WITH CONDUIT SEALING FITTINGS. OZ/GEDNEY TYPE "FSK", "WSK" OR APPROVED EQUAL.
8. IN GENERAL THE FOLLOWING MOUNTING DIMENSIONS ABOVE FINISHED FLOOR SHALL BE ADHERED TO EXCEPT AS NOTED ON PLANS:
   RECEPTACLES = 1' – 6" TO CENTER LINE
   LIGHTING SWITCHES = 4' – 6" TO CENTER LINE
9. THE CONTRACTOR IS RESPONSIBLE FOR PROVIDING ELECTRICAL EQUIPMENT WITH LUGS AND TERMINATIONS TO MATCH ALL FEEDER AND CIRCUIT REQUIREMENTS.
10. WHEREVER THE INSTALLATION OF ELECTRICAL EQUIPMENT AS SHOWN ON THE DRAWINGS IS IMPRACTICAL DUE TO LOCAL INTERFERENCE OR OTHER REASONS THE CONTRACTOR SHALL INSTALL THE EQUIPMENT AT NEW LOCATIONS AS DIRECTED BY THE ENGINEER.
11. THE ELECTRICAL CONTRACTOR SHALL COORDINATE WITH THE OTHER CONTRACTORS FOR FINAL LOCATIONS OF FIELD INSTRUMENTS, LOCAL CONTROL STATION/CONTROL PANELS, & MECHANICAL EQUIPMENT PRIOR TO SUBMITTAL OF CONDUIT LAYOUTS AND CONNECTIONS.
12. THE ELECTRICAL CONTRACTOR SHALL INSTALL GROUND WIRES IN ALL POWER & CONTROL. SIZES SHALL BE AS PER N.E.C. MINIMUM SIZE SHALL BE #12 AWG.
13. FINAL TAGGING FOR ALL PROCESS INSTRUMENTATION AND CONTROL EQUIPMENT MUST BE COORDINATED WITH THE CONTRACT DRAWINGS PRIOR TO SUBMITTAL OF POINT-TO-POINT WIRING DIAGRAMS AND CONDUIT LAYOUT DRAWINGS.
14. ALL CONDUITS AND FITTINGS INSTALLED OUTDOORS SHALL BE TYPE RIGID NONMETALLIC CONDUIT (RNC), PVC SCHEDULE 80. ALL STRUT MATERIAL AND MOUNTING HARDWARE SHALL BE (316) STAINLESS STEEL, EQUIPMENT ENCLOSURES & JUNCTION BOXES SHALL BE NEMA 4X (316) STAINLESS STEEL.
15. ALL CONDUITS AND WIRING PASSING THRU WALLS AND FLOORS SHALL BE SEALED TO PREVENT THE PASSAGE OF MOISTURE WHERE REQUIRED. CONDUIT SEALING FITTINGS SHALL BE TRIPLE-COATED WITH ZINC ELECTROPLATE, DICHROMATE AND EPOXY POWDER AS MANUFACTURED BY APPLETON OR APPROVED EQUAL.
16. THE CONTRACTOR SHALL FIREPROOF/SEAL ALL INTERIOR CONDUITS PASSING THRU WALLS, FLOORS AND CEILINGS IN ACCORDANCE WITH SPEC SECTION 07840 FIRESTOPPING. ADDITIONALLY, THE CONTRACTOR SHALL FIREPROOF/SEAL ALL EXTERIOR CONDUITS PENETRATING THRU WALLS, FLOORS AND ROOFS NOT COVERED BY THE GENERAL CONTRACTOR IN ACCORDANCE WITH SPEC SECTION 07840.
17. PROVIDE JUNCTION BOXES AS REQUIRED TO COMBINE POWER CIRCUITS OR TO EXTEND THE POWER CIRCUITS.
18. ALL CONCRETE WORK FOR DUCT BANK, LIGHTING POLE BASES ETC SHALL BE COORDINATED WITH CIVIL/STRUCTURAL DESIGNS AND APPROVED BY THEM BEFORE COMMENCING INSTALLATION.
19. ALL EMPTY CONDUITS SHALL BE PROVIDED WITH #12 AWG STEEL DRAG WIRES. THE CONTRACTOR SHALL NOT INSTALL MORE THAN THE NUMBER OF CIRCUITS SHOWN IN ANY HOMERUN CIRCUIT.

ABBREVIATIONS

A	AMPERE
AFF	ABOVE FINISHED FLOOR
ATS	AUTOMATIC TRANSFER SWITCH
C.I	CAST IRON
CP	CATHODIC PROTECTION
DFT	DRY FILM THICKNESS
DIA	DIAMETER
DWG	DRAWING
FO	FIBER OPTIC
RMC	RIGID METALLIC CONDUIT
MH	MANHOLE
MCB	MAIN CIRCUIT BREAKER
MTS	MANUAL TRANSFER SWITCH
HH	HANDHOLE
NTS	NOT TO SCALE
NEC	NATIONAL ELECTRICAL CODE
NFPA	NATIONAL FIRE PROTECTION ASSOCIATION
NETA	INTERNATIONAL ELECTRICAL TESTING ASSOCIATION
NTS	NOT TO SCALE
RGS	RGID GALVANIZED STEEL CONDUIT
PVC	POLYVINYL CHLORIDE
TYP	TYPICAL
VA	VOLT-AMPS

WARNING
IT IS A VIOLATION OF SECTION 7209.2 OF THE NEW YORK STATE EDUCATION LAW FOR ANY PERSON, UNLESS ACTING UNDER THE DIRECTION OF A LICENSED PROFESSIONAL ENGINEER, TO ALTER IN ANY WAY PLANS, SPECIFICATIONS, PLATS OR REPORTS TO WHICH THE SEAL OF A PROFESSIONAL ENGINEER HAS BEEN APPLIED. IF AN ITEM BEARING THE SEAL OF A PROFESSIONAL ENGINEER IS ALTERED, THE ALTERING ENGINEER SHALL AFFIX TO THE ITEM HIS SEAL AND THE NOTATION "ALTERED BY" FOLLOWED BY HIS SIGNATURE, THE DATE, AND A SPECIFIC DESCRIPTION OF THE ALTERATION.

POWER LAYOUT DRAWING SYMBOLS

- STRESS CONE AS REQUIRED
- CONDUIT EXPOSED
- CONDUIT CONCEALED IN CEILING, WALLS, BELOW GRADE OR IN FLOOR SLAB.
- CONDUIT CONCEALED ABOVE HUNG CEILING
- GROUND CABLE # 4/0 AWG. COPPER UNLESS NOTED OTHERWISE.
- CONDUIT TURNING DOWN
- CONDUIT TURNING UP
- CONDUIT CAPPED
- EXPLOSION – PROOF CONDUIT SEAL
- CONDUIT EXPANSION FITTING
- OR / JB OR PB — NEMA 12 STAINLESS STEEL(316) JUNCTION OR PULL BOX UNLESS NOTED OTHERWISE ON CONTRACT DRAWINGS. SIZE TO BE DETERMINED BY ELECTRICAL CONTRACTOR.
- NON – FUSED NEMA 12 STAINLESS STEEL(316) DISCONNECT SWITCH UNLESS NOTED OTHERWISE ON CONTRACT DRAWING
- 1,3 & 7 — TYPICAL HOMERUN TO PANELBOARD. TICK MARKS INDICATE WIRE QUANTITY, NUMBERS INDICATE CIRCUITRY. ALL HOMERUNS WILL BE 3/4" CONDUIT, 2#12 AWG UNLESS NOTED OTHERWISE.

SINGLE LINE DIAGRAM SYMBOLS

- CLF — CURRENT LIMITING FUSE
- CURRENT TRANSFORMER, RATIO AS SHOWN
- PT — POTENTIAL TRANSFORMER, RATIO AS SHOWN
- CPT — CONTROL POWER TRANSFORMER, RATIO AS SHOWN
- 20AT/100AF — THERMAL/MAGNETIC BREAKER – TRIP RANGE SETTING BASED ON ACTUAL MOTOR FULL LOAD AMPS
- CONTROL POWER TRANSORMER
- 2 — FVNR CONTACTOR NEMA SIZE 1, OTHER SIZES NOTED BY 2, 3, ETC
- OVERLOAD HEATER RELAY
- 20 AT / 100 AF — **MOLDED CASE CIRCUIT BREAKER, THERMAL-MAGNETIC TRIP, 3-POLE UNLESS OTHERWISE NOTED. AF INDICATES FRAME SIZE, AT INDICATES TRIP SETTING**
- 30A — NONFUSED DISCONNECT SWITCH, RATING AS SHOWN ON CONTRACT DRAWING
- 20A 30A — FUSED DISCONNECT SWITCH, RATING AS SHOWN ON CONTRACT DRAWING
- 100 A — FUSE

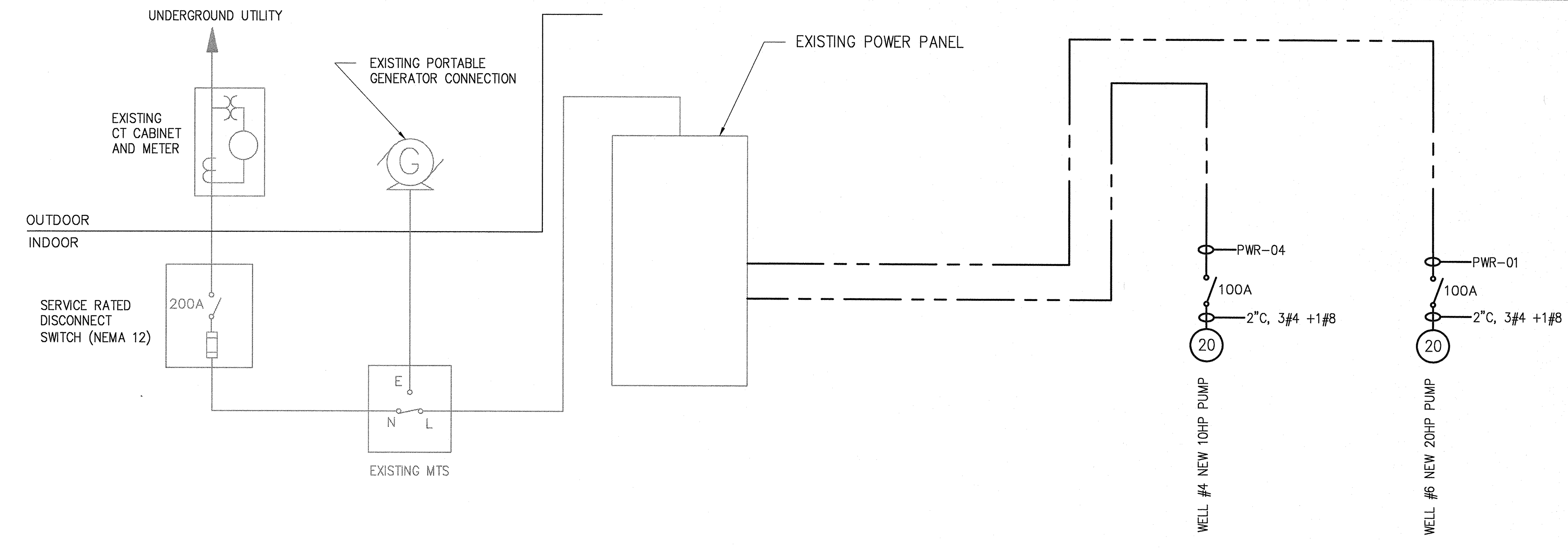

NOTES:

1. EXISTING ELECTRICAL SYSTEM SHALL BE FIELD VERIFIED PRIOR TO CONSTRUCTION.
2. FOR ELECTRICAL EQUIPMENT AND DEVICE LAYOUT REFER TO MECHANICAL DRAWING NO. M-1 AND CIVIL DRAWING NO. C-1.
3. FOR ELECTRICAL CONDUIT ROUTING LAYOUT REFER TO MECHANICAL DRAWING NO. M-1 AND CIVIL DRAWING NO. C-1.
4. SEE MODIFIED EXISTING PANEL SCHEDULE LOCATED ON THIS DRAWING.
5. SEE CABLE AND CONDUIT SCHEDULE ON THIS DRAWING.
6. WELL PUMPS SHALL HAVE A FOUR-WAY SELECTOR SWITCH TO ALLOW ONLY ONE OF THE FOUR WELLS TO OPERATE. SELECTOR SWITCH PROVIDED BY OTHERS.

MODIFIED EXISTING SINGLE LINE DIAGRAM

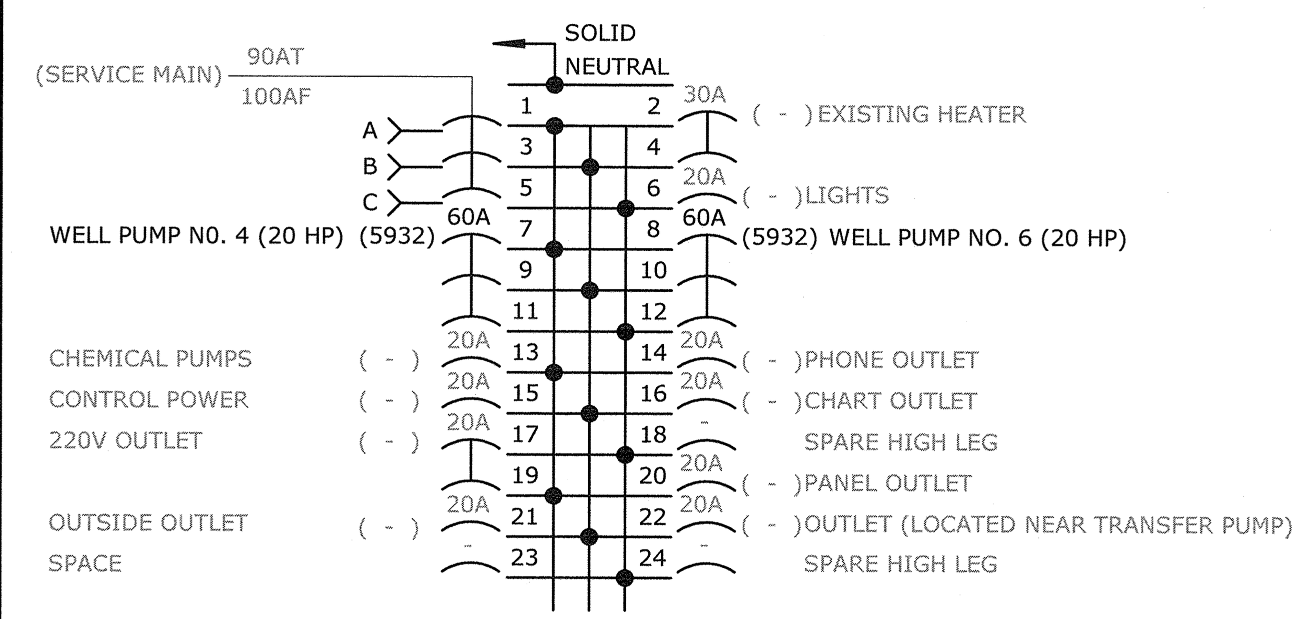

	LOAD-WATTS						
	AN	BN	CN	AB	BC	CA	3PHASE
SUB TOT	X	X	X	X	X	X	11,864
TOTAL	11,864						

EXISTING POWER PANEL

240Y/120V, 3PH, 60HZ, 4 WIRE

NOTES:

1. EXISTING ELECTRICAL SYSTEM SHALL BE FIELD VERIFIED PRIOR TO CONSTRUCTION.
2. CONTRACTOR SHALL VERIFY EXISTING LOAD ON EXISTING POWER PANEL.
3. FOR ELECTRICAL EQUIPMENT AND DEVICE LAYOUT REFER TO MECHANICAL DRAWING NO. M-1 AND CIVIL DRAWING NO. C-1.
4. FOR ELECTRICAL CONDUIT ROUTING LAYOUT REFER TO MECHANICAL DRAWING NO. M-1 AND CIVIL DRAWING NO. C-1.
5. CONTRACTOR SHALL VERIFY DISTRIBUTION PANEL FOR SPARE BREAKER.
6. CONTRACTOR SHALL FURNISH AND INSTALL 20 AMP DOUBLE PULL CIRCUIT BREAKER FOR WELL PUMP NO.S 4 & 6

MODIFIED EXISTING POWER PANEL SCHEDULE

CABLE AND CONDUIT SCHEDULE

CONDUIT #	CONDUIT SIZE	CONDUIT TYPE	CONDUIT FILL	FROM	TO	COMMENTS
PWR-01	2"	RGS/PVC SCHD 80	3#4 & 1#8 GND	EXISTING POWER PANEL	WELL PUMP MOTOR NO.6	VIA DISCONNECT SWITCH
PWR-02	2"	RGS/PVC SCHD 80	SPARE	EXISTING POWER PANEL	FUTURE WELL LOCATION	CAPPED AND SEALED
PWR-03	2"	RGS/PVC SCHD 80	SPARE	EXISTING POWER PANEL	ELECTRICAL HANDHOLE	CAPPED AND SEALED
PWR-04	2"	RGS/PVC SCHD 80	3#4 & 1#8 GND	EXISTING POWER PANEL	WELL PUMP MOTOR NO.4	VIA DISCONNECT SWITCH
CTRL-01	2"	RGS/PVC SCHD 80	2#16 TWSP	WELL PUMP PANEL NO.6	WELL PUMP MOTOR NO.6	
CTRL-02	2"	RGS/PVC SCHD 80	SPARE	CAPPED AND STUB UP 6" AFF CAPPED AND SEAL IN BUILDING	FUTURE WELL LOCATION	CAPPED AND SEALED
CTRL-03	2"	RGS/PVC SCHD 80	SPARE	CAPPED AND STUB UP 6" AFF CAPPED AND SEAL IN BUILDING	COMMUNICATION HANDHOLE	CAPPED AND SEALED
CTRL-04	2"	RGS/PVC SCHD 80	2#16 TWSP	WELL PUMP PANEL NO.4	WELL PUMP MOTOR NO.4	

WCDOH REVIEW

NO.	ISSUED FOR	DATE	BY
B	WCDOH REVISIONS PUMP 6	AUG 2016	KLB
A	BID SET	OCT 2015	KLB

DESIGNED RC
DRAWN RC
CHECKED KLB
PROJ.ENGR. KLB
PROJ.DIR. REP

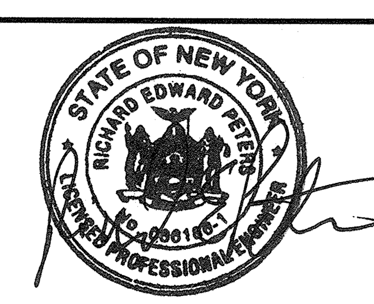

HAZEN AND SAWYER
Environmental Engineers & Scientists
498 Seventh Aveune
New York, New York 10018

NEW YORK AMERICAN WATER

WILD OAKS GROUNDWATER WELL REPLACEMENT

WILD OAKS WELL HOUSE
ELECTRICAL
NOTES, SINGLE LINE AND DETAILS

THE SCALE BAR SHOWN BELOW MEASURES ONE INCH LONG ON THE ORIGINAL DRAWING.

DATE OCTOBER 2015
H&S JOB NUMBER 90185-000
CONTRACT NUMBER -
DRAWING NUMBER E-1

File: O:\90185-000-NYC\DRAWINGS\WILD OAKS\ELEC\E-1B Saved by bcasull Save date: 8/5/2016 3:00 PM

WILD OAKS WATER SYSTEM

Town of Lewisboro Site Development and Wetland Activity Permit Application for Well #4 and Well #6

Attachment 7

Previous Approvals

- Attachment 7a. Cal. 51-14 W.P. Wetland Activity Permit for Wells #4 and #5
- Attachment 7b. Cal. 4-15 P.B. and Cal. 6-15 W.P: Expired Planning Board Resolution for Site Development Plan and Wetland Activity Permit
- Attachment 7c. Cal. 54-15 W.P. Wetland Activity Permit for Well #6
- Attachment 7d. U.S. Army Corps of Engineers Nationwide Permit 12 – Utility Line Activities
- Attachment 7e. New York State Historic Preservation Office Correspondence
- Attachment 7f. NYSDEC Emergency Authorization of Well 4

WILD OAKS WATER SYSTEM

Town of Lewisboro Site Development and Wetland Activity Permit Application for Well #4 and Well #6

Attachment 7a

Cal. 51-14 W.P. Wetland Activity Permit for Wells #4 and #5

WETLAND IMPLEMENTATION PERMIT

TOWN OF LEWISBORO

Town Offices @ Orchard Square, Suite L (Lower Level)
20 North Salem Road, Cross River, NY 10518
Phone: (914) 763-3060
Fax: (914) 533-0097

Date Issued: September 25, 2014 Permit #: 51-14 W.P.

Permit is hereby issued to: New York American Water
260 Harrison Avenue, Harrison, New York 10528

Description of Approved Activity: The applicant is proposing to drill and construct two (2) bedrock test wells within the Town's 150-foot wetland buffer. The wells will be constructed using an 8-inch diameter casing and an 8-inch borehole will be drilled into the underlying bedrock; the total depth of the wells will be determined during the drilling process based on field conditions. While this project was originally processed and reviewed by the Planning Board, at its meeting held on September 16, 2014, the Planning Board determined that the Wetland Permit could be processed administratively through the office of the Town Wetland Inspector.

Location of Proposed Activity: Nash Road

Sheet: 8 Block: 11137 Lot(s): 123

Conditions:

1. No land disturbance activity shall be permitted within the wetlands or within 150 feet of the wetlands, except as specifically approved herein.

2. The following drawings, prepared by Leggette, Brashears & Graham, Inc. and dated August 26, 2014, are hereby approved subject to the conditions set forth below:

   - "Proposed Bedrock Test Well Locations" (Plate 1)
   - "Blow-Ups of Proposed Bedrock Test Well Locations" (Plate 2)

3. Reference is made to a letter prepared by Leggette, Brashears & Graham, Inc., dated July 17, 2014, and Exhibits I through VI attached thereto.

4. Reference is made to a letter prepared by Leggette, Brashears & Graham, Inc., dated August 27, 2014, and Appendix I through IV attached thereto.

5. Reference is made to the Westchester County Department of Health (WCDH) approval letter, dated September 17, 2014.

6. Unless otherwise approved by the Town Wetland Inspector, equipment mats shall be used along the construction access route to Well #4 when moving the drill rig and other equipment.

7. The Town Wetland Inspector and Town Engineer shall be notified 48 hours prior to construction and may inspect and monitor well drilling operations.

8. All disturbed areas shall be raked, seeded and mulched following construction as specified on the plans approved herein.

9. Following completion of all site work, a final site inspection shall be conducted by the Town Wetland Inspector; please call 914-763-3060 to schedule an appointment.

10. The issuance of this permit does not necessarily authorize the commencement of site work. No site work shall commence until the conditions of this permit have been satisfied (the conditions required to be satisfied prior to the commencement of any site work) and until the owner/applicant has obtained any and all required permits from other Town, County, State or Federal Departments and/or Agencies.

11. All work covered by this permit is to be completed before September 25, 2016, unless an extension of this period is requested in writing and granted.

Wetland Inspector

NOTICE OF:

Town of Lewisboro

Wetlands Activity Permit

51-14WP

(To Be Posted In A Conspicuous Location)

Date: 9/25/2014 Issued by: _____

Wetlands Inspector

Expires: 9/25/2016

WILD OAKS WATER SYSTEM

Town of Lewisboro Site Development and Wetland Activity Permit Application for Well #4 and Well #6

Attachment 7b

Cal. 4-15 P.B. and Cal. 6-15 W.P. Expired Planning Board Resolution for Site Development Plan and Wetland Activity Permit

TOWN OF LEWISBORO
Westchester County, New York

Planning Board
PO Box 725
Cross River, New York 10518

Tel: (914) 763-5592
Fax: (914) 763-3637
Email: planning@lewisborogov.com
Website: www.lewisborogov.com

June 17, 2015

Ms. Kristen Barrett
Hazen & Sawyer
498 7th Avenue
New York, NY 10018

Re: New York American Water/Wild Oaks Water System
Sheet 8, Block 11137, Lot 123
Cal# 4-15PB and Cal# 6-15WP

Dear Ms. Barrett:

Please find enclosed a certified copy of the resolution adopted by the Planning Board at the June 16, 2015 Planning Board meeting for your information and subsequent action.

Very truly yours,

Lisa M Pisera

Lisa M. Pisera
Planning Board Secretary

Enclosure

cc: Janet Donohue, Town Clerk
Peter Barrett, Building Inspector
cc (via email): Planning Board Members
Jud Siebert, Esq., Planning Board Counsel
Jan Johannessen, AICP, Town Planning/Wetland Consultant
Conservation Advisory Board Members
Ross Diamond, Hazen & Sawyer

RESOLUTION
LEWISBORO PLANNING BOARD

SITE DEVELOPMENT PLAN APPROVAL
WETLAND ACTIVITY PERMIT APPROVAL

NEW YORK AMERICAN WATER
WILD OAKS WATER SYSTEM
NASH ROAD

Sheet 8, Block 11137, Lot 123
Cal. #4-15 P.B. and Cal. #6-15 W.P.

June 16, 2015

WHEREAS, the subject property consists of ±1.8 acres of land, is located off of Nash Road within the R-4A Zoning District, and is identified on the Town Tax Maps as Sheet 8, Block 11137, Lot 123 ("the subject property"); and

WHEREAS, New York American Water ("the owner/applicant") operates the Wild Oaks Water System on the subject property, a drinking water system composed of sand and gravel groundwater supply wells and on-site treatment which serves approximately 600 customers within the Town of Lewisboro; and

WHEREAS, the subject property is accessed via an existing gravel road off of Nash Road and contains an existing pump house, which receives water from the two (2) currently existing sand and gravel wells and treats the water with chlorine and UV light before distributing it into the larger system; and

WHEREAS, the subject property contains a series of ponds, watercourses and wetlands which are jurisdictional to the Town of Lewisboro under Chapter 217, Wetlands and Watercourses, of the Town Code; and

WHEREAS, on September 25, 2014, following review by the Planning Board and referral to the Wetland Inspector for administrative approval, the owner/applicant received a Wetland Permit (Wetland Permit #51-14 W.P.) associated with the drilling of two (2) bedrock test wells (Test Well #4 and #5) on the subject property and within the Town of Lewisboro 150-foot wetland buffer; and

WHEREAS, Test Wells #4 and #5 have been installed and the owner/applicant is now proposing to convert these two (2) test wells into active bedrock supply wells and connect them to the existing treatment and distribution system ("the proposed action'); and

WHEREAS, the proposed action will involve installing a pump into each of the two (2) test wells, capping the well and tying the new well into the existing pump house via a 4-inch diameter restrained-joint ductile iron pipe; and

WHEREAS, additional water supply wells are needed within the Wild Oaks Water System to replace the existing sand and gravel wells, which are directly influenced by surface water and runoff; and

WHEREAS, replacement of the existing sand and gravel wells with bedrock wells will reduce the influence of surface water on the water supply and increase the raw water quality in the system; and

WHEREAS, both test wells are located within the Town's regulated wetland buffer area and the proposed action will result in ±0.056 acres of wetland buffer disturbance and ±0.041 acres of disturbance to the wetland proper; and

WHEREAS, the proposed disturbance to the wetland and wetland buffer is temporary in nature and disturbed areas will be restored to the existing condition via the installation of a native wetland seed mix following construction; and

WHEREAS, the owner/applicant has developed an erosion and sediment control plan which will be implemented prior and during construction in accordance with Town and New York State Department of Environmental Conservation (NYSDEC) standards; and

WHEREAS, on-site wetlands were delineated by Hazen and Sawyer Environmental Engineers and Scientists ("Hazen and Sawyer") and reference is made to a Wetland Delineation Report, dated July 2014; and

WHEREAS, reference is made to a letter from the Army Corps of Engineers, dated April 28, 2015, which states that the proposed action can be accomplished under the Army Nationwide General Permit Number 12; and

WHEREAS, the proposed public water supply requires approval from the Westchester County Department of Health (WCDH); and

WHEREAS, the owner/applicant has made application to the WCDH and the permit application is currently under review; and

WHEREAS, the application was referred to and reviewed by the Conservation Advisory Council (CAC); and

WHEREAS, the proposed action is a Type II Action and is categorically exempt from the State Environmental Quality Review Act (SEQRA); and

WHEREAS, the public hearing on the Site Development Plan and Wetland Activity Permit was opened and closed on June 16, 2015, at which time all interested parties were afforded an opportunity to be heard; and

WHEREAS, the Planning Board is familiar with the subject property and the general surrounding area; and

WHEREAS, the Planning Board has considered the submitted Wetland Activity Permit Application, Site Development Plan Application, other materials submitted by the owner/applicant in support of its proposal, the written and verbal comments from the Board's professional consultants, written and verbal comments provided by the CAC, testimony of the owner/applicant, and verbal comments made during Planning Board meetings.

NOW THEREFORE BE IT RESOLVED THAT, the Planning Board hereby grants Site Development Plan Approval, subject to the below conditions; and

BE IT FURTHER RESOLVED THAT, the Planning Board hereby approves the following drawings, hereafter referred to as "the approved Site Development Plans", prepared by Hazen and Sawyer and dated (last revised) May 2015, subject to the below conditions:

- Pipeline Project Civil Site Plan (Sheet C-1)
- Pipeline Project Civil Landscape Plan (Sheet C-2)
- Pipeline Project Erosion and Sediment Control Details (Sheet C-3)
- Pipeline Project Civil Details (Sheet C-4)

BE IT FURTHER RESOLVED THAT, Site Development Plan Approval, defined as the signing of the approved Site Development Plans by the Planning Board Chairman, shall expire unless a Building Permit is applied for within one (1) year of the date of the signing of the plans or if all required improvements are not completed within three (3) years of the signing of the plans or if the construction or use shall cease for more than one (1) year; and

BE IT FURTHER RESOLVED THAT, the Planning Board may extend conditional approval and approval of the Site Development Plans by not more than two (2) additional periods of 90 days each if, in the Planning Board's opinion, such extension is warranted by the particular circumstances; and

BE IT FURTHER RESOLVED THAT, any subsequent alterations, modifications, additions or changes to the approved and/or constructed improvements shall require the prior review and written approval by the Planning Board as a new, modified and/or amended application for Site Development Plan Approval; and

BE IT FURTHER RESOLVED THAT, failure to comply with the approved Site Development Plans or any of the conditions set forth herein shall be deemed a violation of Site Development Plan Approval, which may lead to the revocation of said approval or the revocation by the Building Inspector of any issued Building Permit or Certificate of Occupancy; and

BE IT FURTHER RESOLVED THAT, in comparing the magnitude of the proposed action and impacts to the wetland and wetland buffer, the Planning Board has determined that the proposed action will not result in an adverse impact to on or off-site wetlands and watercourses; and

BE IT FURTHER RESOLVED THAT, in the granting of this Wetland Activity Permit, the Planning Board has considered/evaluated wetland and wetland buffer functions and the role of

the wetland and wetland buffer areas in the hydrologic and ecological system and has determined that the impact of the proposed action upon the public health and safety; special concern, rare, threatened and endangered species; water quality and wetland and wetland buffer functions has been avoided or minimized to the maximum extent practicable. In this determination, the Planning Board has taken into account the factors listed under Section 217-8A of the Wetland and Watercourse Law; and

BE IT FURTHER RESOLVED THAT, the Planning Board has reviewed the criteria listed under Section 217-8B of the Wetland and Watercourse Law and has determined that any impacts to the affected wetland buffer are necessary and unavoidable and have been minimized to the maximum extent practicable; and

BE IT FURTHER RESOLVED THAT, the Planning Board hereby finds that the Wetland Activity Permit Application pertaining to the proposed action is consistent with the provisions and policies of Chapter 217 of the Code of the Town of Lewisboro and said permit is hereby approved, subject to the conditions set forth below; and

BE IT FURTHER RESOLVED THAT, all work associated with this Wetland Activity Permit shall be conducted in strict compliance with the Site Development Plans approved herein; and

BE IT FURTHER RESOLVED THAT, this Wetland Activity Permit shall expire without further written notice if the requirements of this Resolution are not completed, as set forth herein. As provided pursuant to the Town's Wetlands and Watercourses Law, this Wetland Activity Permit is subject to revocation should the owner/applicant not comply with the terms and conditions of this Resolution; and

BE IT FURTHER RESOLVED THAT, this Wetland Activity Permit shall expire two (2) years from the date of this Resolution, unless an extension is granted by the Planning Board in accordance with Section 217-9F(5) of the Town's Wetland and Watercourses Law; and

BE IT FURTHER RESOLVED THAT, the time frames set forth in this Resolution of Approval may only be amended or extended by the Planning Board. Any request for extension shall be made in writing and shall state the circumstances for the requested extension. In considering any such requests, the Planning Board may require an Amendment review and may require a public hearing; and

BE IT FURTHER RESOLVED THAT, this approval shall be deemed to authorize only the particular use(s) and improvements specified herein and illustrated on the approved Site Development Plans referenced above; and

BE IT FURTHER RESOLVED THAT, Conditions 1-10 must be completed within six (6) months of the date of this Resolution or as extended by the Planning Board. Should the below-listed conditions not be completed within the allotted time frame, this Resolution shall become null and void unless an extension is requested by the owner/applicant (in writing) within said six (6) month period and granted by the Planning Board.

Conditions to be Satisfied Prior to the Signing of the Site Development Plans by the Secretary and Chairman:

1. Each and every sheet of the approved Site Development Plans shall contain a common revision date with notation stating "Planning Board Approval", shall contain an original seal and signature of the design professional and shall contain an original signature of the owner(s).

2. The owner/applicant shall submit to the Planning Board Secretary an engineering/inspection fee equal to 5% of the estimated cost of construction; said estimate shall be provided by the owner/applicant, in writing, and approved by the Town Engineer.

3. The owner/applicant shall obtain and submit all necessary permits from the WCDH.

4. The 72-hour pump test results shall be submitted and reviewed by the Town Engineer.

5. The owner/applicant shall address any outstanding written comments from the Town's consultants.

6. The owner/applicant shall submit a "check set" (2 copies) of the approved Site Development Plans, prepared in final form and in accordance with the conditions of this Resolution, for review by the Planning Board's consultants.

7. Following review and revision (if necessary) of the final plans, the owner/applicant shall furnish the Planning Board with two (2) complete mylar sets of the approved Site Development Plans for final review by the Town's consultants and endorsement by the Town Engineer, Planning Board Chairman and Secretary.

8. The owner/applicant shall obtain a Wetland Implementation Permit, as issued by the Town Wetland Inspector.

9. The owner/applicant shall provide a written statement to the Planning Board Secretary acknowledging that they have read and will abide by all conditions of this Resolution.

10. The owner/applicant shall pay to the Town of Lewisboro, by certified check, all outstanding professional review fees.

Conditions to be Satisfied Prior to the Issuance of a Building Permit:

11. Following the endorsement of the Final Site Development Plans by the Town Engineer, Planning Board Chairman and Secretary, one (1) mylar set will be returned to the owner/applicant for copying and the second mylar set will be retained by the Planning Board as a record copy.

12. Within 10 days after endorsement of the Final Site Development Plans by the Town Engineer, Planning Board Chairman and Planning Board Secretary, the owner/applicant shall deliver to the Planning Board Secretary nine printed sets of the plans, collated and folded.

Conditions to be Satisfied Prior to Commencement of Work:

13. Forty-eight (48) hours advance notice must be given to the Town Engineer prior to commencement of work.

Conditions to be Satisfied During Construction:

14. During construction, the Town's consultants may conduct site inspections, as necessary, to determine compliance with the provisions of this Resolution and the approved Site Development Plans.

15. A copy of this Resolution and the approved Site Development Plans shall be kept on site at all times.

Conditions to be Satisfied Prior to the Issuance of a Building Department or Wetland Certificate of Compliance

16. An as-built survey prepared by a NYS Licensed Land Surveyor demonstrating compliance with the approved Site Development Plans shall be submitted to the Building Inspector and Planning Board.

17. The Building Inspector and Town's consultants shall conduct a final site visit to determine conformance with the approved plans.

18. The owner/applicant shall obtain a Wetland Certificate of Compliance from the Town of Lewisboro Wetland Inspector.

19. The owner/applicant shall pay to the Town of Lewisboro, by certified check, all outstanding professional review fees.

ADOPTION OF RESOLUTION

WHEREUPON, the Resolution herein was declared adopted by the Planning Board of the Town of Lewisboro as follows:

The motion was moved by: Mr. O'Donnell

The motion was seconded by: Mr. Tetelman

The vote was as follows:

JEROME KERNER	Aye
JOHN O'DONNELL	Aye
RON TETELMAN	Aye
ROBERT GOETT	Aye
GREG LASORSA	Absent

Jerome Kerner, Chairman **June 16, 2015**

STATE OF NEW YORK
COUNTY OF WESTCHESTER
TOWN OF LEWISBORO

I, Lisa M. Pisera, Secretary to the Planning Board of the Town of Lewisboro, County of Westchester, State of New York, do hereby certify that I have compared the preceding copy of a resolution adopted by the Planning Board of the Town Lewisboro, County Westchester at a meeting held on the 16th day of June, 2015 and that the same is a true and correct copy of said original and of the whole thereof.

Lisa M. Pisera
Planning Board Secretary

Dated at Cross River, New York
This 17th day of June, 2015

WILD OAKS WATER SYSTEM

Town of Lewisboro Site Development and Wetland Activity Permit Application for Well #4 and Well #6

Attachment 7c

Cal. 54-15 W.P. Wetland Activity Permit for Well #6

WETLAND IMPLEMENTATION PERMIT

TOWN OF LEWISBORO

Town Offices @ Orchard Square, Suite L (Lower Level)
20 North Salem Road, Cross River, NY 10518
Phone: (914) 763-3060
Fax: (914) 533-0097

Date Issued: October 13, 2015 Permit #: 54-15 W.P.

Permit is hereby issued to: New York American Water
260 Harrison Avenue, Harrison, New York 10528

Description of Approved Activity: The applicant is proposing the installation of a test well (Test Well #6). While this project was originally processed and reviewed by the Planning Board, at its meeting held on September 29, 2015, the Planning Board determined that the Wetland Permit could be processed administratively through the office of the Town Wetland Inspector.

Location of Proposed Activity: Nash Road

Sheet: 8 Block: 11137 Lot(s): 123

Conditions:

1. No land disturbance activity shall be permitted within the wetlands or within 150 feet of the wetlands, except as specifically approved herein.

2. The following drawings, prepared by Leggette, Brashears & Graham, Inc. (LBG), are hereby approved subject to the conditions set forth below:

   - Proposed Bedrock Test Well Location (Plate 1), dated August 26, 2015
   - Blow-Up of Proposed Bedrock Test Well Location (Plate 2), dated August 26, 2015
   - May 2015 Pumping Test Program (Plate 1), dated June 16, 2015
   - Site Location Map (Figure 1), dated August 20, 2015

3. Reference is made to the *Description of Activities – Bedrock Test Well Drilling* Report.

4. Reference is made to the *Wetland Delineation Report*, prepared by Hazen and Sawyer, dated July 2014.

5. Reference is made to the *Application for Well Site Permit Report*, prepared by LBG, dated August 13, 2015.

6. Reference is made to the *72-Hour Pumping Test Program Conducted on Wells 4 and 5, May 18 through May 30, 2015* Report, prepared by LBG, dated July 31, 2015.

7. Unless otherwise approved by the Town Wetland Inspector, equipment mats shall be used along the construction access route to Well #6 when moving the drill rig and other equipment.

8. The Town Wetland Inspector and Town Engineer shall be notified 48 hours prior to construction and may inspect and monitor well drilling operations.

9. All disturbed areas shall be raked, seeded and mulched following construction as specified on the plans approved herein.

10. Following completion of all site work, a final site inspection shall be conducted by the Town Wetland Inspector; please call 914-763-3060 to schedule an appointment.

11. The issuance of this permit does not necessarily authorize the commencement of site work. No site work shall commence until the conditions of this permit have been satisfied (the conditions required to be satisfied prior to the commencement of any site work) and until the owner/applicant has obtained any and all required permits from other Town, County, State or Federal Departments and/or Agencies.

12. All work covered by this permit is to be completed before October 13, 2017, unless an extension of this period is requested in writing and granted.

Wetland Inspector

WILD OAKS WATER SYSTEM

Town of Lewisboro Site Development and Wetland Activity Permit Application for Well #4 and Well #6

Attachment 7d

U.S. Army Corps of Engineers Nationwide Permit 12 – Utility Line Activities

DEPARTMENT OF THE ARMY
NEW YORK DISTRICT, CORPS OF ENGINEERS
JACOB K. JAVITS FEDERAL BUILDING
26 FEDERAL PLAZA
NEW YORK, NEW YORK 10278-0090

APR 2 8 2015

Regulatory Branch

SUBJECT: Permit Application Number NAN-2015-00301-WOM
by New York American Water

New York American Water
C/o Mr. Richard Ruge
260 Harrison Avenue
Harrison, New York 10528

Dear Mr. Ruge:

On March 10, 2015, the New York District of the U.S. Army Corps of Engineers received a request for Department of the Army authorization to facilitate the proposed connection of a New York American Water drinking water supply well to the existing pump house. The site is located in the Town of Lewisboro, Westchester County, New York.

A submittal entitled "Wild Oaks Water System" prepared by Hazen and Sawyer, dated March 3, 2015, and a supplemental information submittal, dated April 17, 2015, indicate that the proposed work would consist of converting two test wells (BRW1 and BRW2) into permanent water supply wells. Both wells are located in uplands. Temporary trenches would be dug to run the necessary utilities connecting the wells to the pump house, also in uplands. The utilities for BRW2 would cross through a wetland, though, resulting in a temporary impact of approximately 172 linear feet (0.041 acres) from the trenching. The trench itself would be approximately four feet deep and a 4-inch diameter restrained-joint ductile iron pipe would be placed in the trench. Wetland matting would be placed prior to any mechanical trenching or pipe installation within wetland boundaries. After completion of the utility connection, the trench would be filled with the excavated soils. All disturbed areas of the wetland would be restored to pre-construction conditions and re-vegetated with a native wetland seed mix.

It should be noted that the proposed project area also contains two ponds and a stream. Although these waterbodies would not be disturbed by the work, sediment and erosion control measures, such as silt fences and hay bales, would be placed around all areas of access and construction to minimize any erosion or sediment transport to the waters. In addition to the trenching work, the access road, which crosses the stream, would be stabilized by placement of gravel; however, no disturbance to the stream bed and banks, or the existing culverts, would occur. At the completion of the work, all temporary construction barriers associated with the work, including but not limited to silt fences and hay bales, would be removed.

Based on the information submitted to this office, our review of the project indicates that an individual permit is not required. It appears that the activities within the jurisdiction

of this office could be accomplished under Department of the Army Nationwide General Permit Number 12. The nationwide permits are prescribed as a Reissuance of Nationwide Permits in the Federal Register dated February 21, 2012 (77 FR 10184). The work may be performed without further authorization from this office provided the activity complies with the permit conditions listed in Section B, No. 12, Section C, any applicable New York District regional conditions, the following special conditions, and any applicable regional conditions added by the State of New York, copies enclosed.

Special Conditions

(A) The permittee shall undertake the authorized filling activities in a manner aimed at reducing impacts upon the general environment. In addition, the permittee shall not stockpile fill or other materials in a manner conducive to erosion, or in areas likely to cause high turbidity runoff during storm events. All exposed soils shall be re-vegetated in a timely manner to further reduce potential effects. The permittee shall also fence off all wetlands and other sensitive ecological areas during construction periods to prevent equipment and personnel from entering those areas.

(B) At the completion of the work, the permittee shall remove all temporary construction barriers, including but not limited to silt fences and hay bales, associated with the work.

This determination covers only the work described in the submitted material. Any major changes in the project may require additional authorizations from the New York District.

Care should be taken so that construction materials, including debris, do not enter any waterway to become drift or pollution hazards. You are to contact the appropriate state and local government officials to ensure that the subject work is performed in compliance with their requirements.

Please note that this nationwide permit (NWP) verification is based on a preliminary jurisdictional determination (JD). A preliminary JD is not appealable. If you wish, prior to commencement of the authorized work you may request an approved JD, which may be appealed, by contacting the New York District, U.S. Army Corps of Engineers for further instruction. To assist you in this decision and address any questions you may have on the differences between preliminary and approved jurisdictional determinations, please review U.S. Army Corps of Engineers Regulatory Guidance Letter No. 08-02, which can be found at: http://www.usace.army.mil/Portals/2/docs/civilworks/RGLS/rgl08-02.pdf

This verification is valid until March 18, 2017, unless the nationwide permit is modified, reissued, or revoked. This verification will remain valid until March 18, 2017, if the activity complies with the terms of any subsequent modifications of the nationwide permit authorization. If the nationwide permits are suspended, revoked, or modified in such a way that the activity would no longer comply with the terms and conditions of a nationwide permit, and the proposed activity has commenced, or is under contract to

APR 2 8 2015

commence, the permittee shall have 12 months from the date of such action to complete the activity.

Within 30 days of the completion of the activity authorized by this permit and any mitigation required by this permit, you are to sign and submit the attached compliance certification form to this office.

In order for us to better serve you, please complete our Customer Service Survey located at http://www.nan.usace.army.mil/Missions/Regulatory/CustomerSurvey.aspx.

If any questions should arise concerning this matter, please contact Melanie O'Meara, of my staff, at (917) 790-8417.

Sincerely,

Rosita Miranda
Chief, Western Section

Enclosures

cc: NYSDEC - Region 3
Town of Lewisboro
Kristen Barrett, PE, Hazen and Sawyer

WILD OAKS WATER SYSTEM

Town of Lewisboro Site Development and Wetland Activity Permit Application for Well #4 and Well #6

Attachment 7e

New York State Historic Preservation Office Correspondence

Andrew M. Cuomo
Governor

Rose Harvey
Commissioner

New York State Office of Parks, Recreation and Historic Preservation

Division for Historic Preservation
Peebles Island, PO Box 189, Waterford, New York 12188-0189
518-237-8643
www.nysparks.com

March 23, 2015

Mr. Richard Ruge
New York American Water
260 Harrison Avenue
Harrison, NY 10528

Re: USACE
New York American Water - Wild Oaks Water System
Nash Road, Lewsisboro, NY
15PR01226

Dear Mr. Ruge:

Thank you for requesting the comments of the State Historic Preservation Office (SHPO). We have reviewed the project in accordance with Section 106 of the National Historic Preservation Act of 1966. These comments are those of the SHPO and relate only to Historic/Cultural resources. They do not include potential environmental impacts to New York State Parkland that may be involved in or near your project. Such impacts must be considered as part of the environmental review of the project pursuant to the National Environmental Policy Act and/or the State Environmental Quality Review Act (New York Environmental Conservation Law Article 8).

Based upon this review, the New York SHPO has determined that no historic properties will be affected by this undertaking.

If further correspondence is required regarding this project, please be sure to refer to the OPRHP Project Review (PR) number noted above.

Sincerely,

Ruth L. Pierpont

Ruth L. Pierpont
Deputy Commissioner for Historic Preservation

WILD OAKS WATER SYSTEM

Town of Lewisboro Site Development and Wetland Activity Permit Application for Well #4 and Well #6

Attachment 7f

NYSDEC Emergency Authorization of Well #4

NEW YORK STATE DEPARTMENT OF ENVIRONMENTAL CONSERVATION

Division of Environmental Permits, Region 3
21 South Putt Corners Road, New Paltz, NY 12561-1620
P: (845) 256-3054 | F: (845) 255-4659
www.dec.ny.gov

October 13, 2016

Stacy Stieber
Leggette, Brashears & Graham, Inc.
4 Research Drive, Suite 204
Shelton, CT 06484

RE: DEC No. 3-5530-00103/00004
Well #4 Wild Oaks Water System, New York American Water
Town of Lewisboro, Westchester County

EMERGENCY AUTHORIZATION RENEWAL

Ms. Stieber:

On August 15, 2016 the New York State Department of Environmental Conservation (DEC) received correspondence, from Leggette, Brashears & Graham, Inc., on behalf of New York American Water, notifying the DEC of the emergency use of "Well 4" of the Wild Oaks Water System (Wild Oak). According to the notification, the emergency use of Well #4 was required due to the inability of the three permitted wells (Production Wells 1 and 2 and bedrock Well 3) to meet the system's demand.

The August 15th notification contained insufficient information for the DEC to make a finding of an emergency as per NYS Uniform Procedures Act (6 NYCRR Part 621.12). On August 16, 2016, as per 621.12(d)(5), DEC staff requested additional information to make a determination on a finding of an emergency.

On September 13, 2016, the DEC received a response to this information request including documentation, dated September 6, 2016 from Delroy Taylor, Westchester County Department of Health (WCDH). The documentation contained confirmation of Wild Oak's inability to provide an adequate quantity of water at an adequate pressure for the system's 610 residents, constituting a potential health hazard in accordance with Part 5, Subpart 5-1 of the New York State Sanitary Code.

On September 13, 2016 the DEC made a determination that an emergency exists in accordance with the requirements of 6 NYCRR Part 621.12 and issued an emergency authorization with an expiration date of October 13, 2016.

On October 11, 2016 the DEC received a request from Leggette, Brashears & Graham, Inc., on behalf of New York American Water, for a 30-day extension of the September 13th, 2016 emergency authorization to continue use of Well #4 of the Wild Oak's well field. Based upon the review of this September 13, 2016 renewal request,

New York American Water is hereby authorized to continue use of Well #4 of Wild Oak as an emergency water supply source for an additional 30 days. This emergency authorization will expire on **November 12, 2016**. Therefore, on or before November 13, 2016, the project must be concluded or a complete application submitted to the Department.

If you have any questions on the extent of work authorized or New York American Water's obligations under this Emergency Authorization, please contact me at (845) 256-3801.

Sincerely,

Daniel Whitehead
Regional Permit Administrator
Region 3

ecc: Richard Ruge, New York American Water
Delroy Taylor, P.E., WCDH
E, Kim, NYS DEC DOW
S. Karimipour, Regional Water Engineer, NYS DEC

Westchester gov.com

Robert P. Astorino
County Executive

Sherlita Amler, M.D.
Commissioner of Health

September 6, 2016

Daniel T. Whitehead
Regional Permit Administrator
New York State DEC
Division of Environmental Permits, Region 3
21 South Putt Corners Road,
New Paltz, NY 12561-1620

Dear Mr. Whitehead,

On July 21, 2016, Westchester County Department of Health (WCDH) received a request from New York American Water (NYAW) to place the newly constructed Well #4 of the Wild Oaks Water system into emergency service. The use of Well 4 was requested as the existing shallow wells #1 and #2 and Well # 3 were not producing enough water to meet system demands, as they were producing significantly less water (approximately 40 gpm) than their rated capacity. In addition, the water quality of the shallow wells had deteriorated requiring the 1 and 5 micron filters to be replaced in one to two days. Entrained air was also observed, likely due to the low water level within the wells. Due to the loss in the wells productivity the Wild Oaks Water System Storage Tank's level could not be maintained and the tank level had dropped significantly. To maintain flow in the system NYAW had to truck in water to add to the storage tank to supplement the water from the wells.

The Wild Oaks water system serves 610 residents and also provides fire flow for the community. The water supply's inability to provide an adequate quantity of water at an adequate pressure constitutes a potential health hazard in accordance with Part 5, Subpart 5-1 of the New York State Sanitary Code. In addition, the water supply's inability to provide water for adequate fire protection constitutes an emergency condition presenting an immediate threat to the residents and community. As defined by NYCRR Part 621.2(j) "Emergency means a natural, accidental, or intentional human-caused event or circumstance which presents an immediate threat to life, health, property, general welfare or natural resources."

As a result of the above, permission was granted for temporary emergency installation and use of the new deep well, Well #4, in order to meet the system demands and maintain an adequate water storage tank level to provide immediate protection of life, health, general welfare, property. The temporary installation was completed and the well placed in service on Friday, July 22.

Please feel free to contact me if you have any questions or require additional information at 914-864-7296 or dat5@westchestergov.com.

Yours Truly,

Delroy Taylor P.E.
Associate Engineer
Bureau of Environmental Quality

DT:mr

REDUCE REUSE RECYCLE

Department of Health
25 Moore Ave
Mt. Kisco, New York 10549

Telephone: (914) 813-5000 Fax: (914) 864-7341

WILD OAKS WATER SYSTEM

Town of Lewisboro Site Development and Wetland Activity Permit Application for Well #4 and Well #6

Attachment 8

Site Photographs

Photo 1
Photo taken 11/21/2016 facing northwest. Dump truck on construction entrance.

Photo 2
Photo taken 11/21/2016 facing south. Temporary matting placed in construction area.

Photo 3
Photo taken 11/21/2016 facing west. Temporary matting and silt fence.

Photo 4
Photo taken 11/21/2016 facing east. Temporary matting and silt fence.

Photo 5
Photo taken 11/21/2016 facing southeast. Blue temporary hose connects Well #4 to the pump house and Test Well #6 located to the right without a pump housing.

Photo 6
Photo taken 11/21/2016 facing north. Truck and pump house visible in distance.

Photo 7
Photo taken 11/21/2016 facing east. Silt fence near pump house.

Photo 8
Photo taken 11/21/2016 facing east. Close-up of silt fence.

Photo 9
Photo taken 11/21/2016 facing north. Construction entrance.

Photo 10
Photo taken 11/21/2016 facing west. Construction entrance and temporary matting.

Photo 11
Photo taken 5/8/2014 facing south, standing at pump house. Strip of land between two freshwater ponds.

Photo 12
Photo taken 5/8/2014 facing east. Southern end of Wetland A. Drainage channel in center and vehicle ruts in foreground.

Photo 13
Photo taken 5/8/2014 facing south. Drainage channel on uphill, northerly facing slope. South of study area.

Photo 14
Photo taken 5/8/2014 facing north, uphill slope. Confluence of drainage channel with disturbed access path and beginning of fringe in foreground. Purple wetland flags showing southerly boundary of Wetland A.

Photo 15
Photo taken 5/8/2014 facing east, upstream of unnamed stream.

Photo 16
Photo taken 5/8/2014 facing west, downstream of unnamed stream. Culverted section just north of pump house.

Photo 17
Photo taken 5/8/2014 facing east on smaller pond, from mowed strip. Fringe vegetation.

Photo 18
Photo taken 5/8/2014 facing east. Wetland B. Power line and dumping evident.

Photo 19

Photo taken 5/8/2014 facing north. Wetland B. Microtopographic relief evident. Depressions showing surface water and in drier conditions, water-stained leaves.

WILD OAKS WATER SYSTEM

Town of Lewisboro Site Development and Wetland Activity Permit Application for Well #4 and Well #6

Attachment 9

Wetland Delineation Report

WETLAND DELINEATION REPORT

FOR

NEW YORK AMERICAN WATER'S WILD OAKS WATER SYSTEM

July 2014

Prepared by:

HAZEN AND SAWYER
Environmental Engineers & Scientists

TABLE OF CONTENTS

1.0 INTRODUCTION 3

2.0 METHODOLOGY 3

3.0 STUDY AREA 3

4.0 RESULTS 3

4.1 Wetland A 4

4.2 Wetland B 5

5.0 CONCLUSION 5

6.0 REFERENCES 5

7.0 FIGURES 6

FIGURE 1. UNITED STATES GEOLOGIC SURVEY (USGS) CROTON FALLS QUADRANT
FIGURE 2. SITE LOCATION DIAGRAM
FIGURE 3. USFWS NATIONAL WETLANDS INVENTORY
FIGURE 4. NYSDEC FRESHWATER WETLANDS
FIGURE 5. USDA NRCS SOIL SERIES
FIGURE 6. WETLAND DELINEATION RESULTS

8.0 APPENDICES 7

APPENDIX A. NATIONAL WETLAND INVENTORY CLASSIFICATIONS
APPENDIX B. NYSDEC ENVIRONMENTAL RESOURCES MAPPER
APPENDIX C. HYDROLOGIC SOIL GROUPS FOR WESTCHESTER COUNTY, NEW YORK
APPENDIX D. SOIL SERIES DESCRIPTIONS
APPENDIX E. USACE WETLAND DETERMINATION DATA FORMS
APPENDIX F. PHOTOGRAPH LOG

1.0 INTRODUCTION

New York American Water (NYAW) is proposing the expansion of the Wild Oaks Water System, an existing water-supply area located on Nash Road in The Town of Lewisboro, Westchester County, NY (**Figure 1**). NYAW requested that Hazen and Sawyer (H&S) perform a wetland delineation and inventory for a study area within the Wild Oaks Water System (**Figure 2**).

2.0 METHODOLOGY

A desktop review of the study area was conducted to assess the potential presence of wetlands using the United States Fish and Wildlife Service (USFWS) National Wetland Inventory maps (**Figure 3** and **Appendix A**) and New York State Department of Environmental Conservation (NYSDEC) freshwater wetlands maps (**Figure 4** and **Appendix B**). The United States Department of Agriculture Natural Resources Conservation Service (USDA NRCS) Web Soil Survey was consulted for a list of soils in the local area (**Figure 5**) and cross referenced with the list of Hydrologic Soil Groups: Westchester County, New York (**Appendix C**) (USDA NRCS, 2012). Descriptions of all soil series in the vicinity of the study area were generated from the USDA NRCS Web Soil Survey, Soil Report tool (**Appendix D**).

Following the desktop review, an on-site wetland delineation was performed in accordance with the three-parameter approach (vegetation, soils, and hydrology) outlined in the 1987 United States Army Corps of Engineers (USACE) "Wetlands Delineation Manual" (USACE, 1987) and the "Regional Supplement to the Corps of Engineers Wetland Delineation Manual: Northcentral and Northeast Region" (USACE, 2011). Wetland and upland data were recorded on USACE Northcentral and Northeast Region Wetland Determination Data Forms (**Appendix E**) (USACE, 2011) and the wetland/upland boundary and additional data point geographic locations were recorded in a Trimble Global Positioning Unit (GPS) model GEO XH with sub-meter accuracy.

3.0 STUDY AREA

The study area contains a mowed strip of land that abuts two freshwater ponds. To the south of these ponds are ascending slopes and to the north of the ponds is an unnamed stream and floodplain forest. An existing well pump house is located at the northern end of the mowed strip and is accessible from Nash Road via an unpaved access road. Photographs of the study area are provided in **Appendix F**.

4.0 RESULTS

The desktop analysis shows that the potential for wetlands in the study area are high. The study area is low-lying and several areas 200 to 300 feet vertically higher drain towards the study area. There is an approximately 6-foot wide perennial unnamed stream running through the study area that feeds into the western pond. This stream was close to bank-full conditions at the time of the delineation. In the vicinity of the existing pump house, the stream passes underneath the existing access road via four, 24-inch corrugated metal culverts. The unnamed tributary is a NYCRR Part 701 Class C fresh surface water body with fishing best usage (NYSDEC, 1991). The surface water

shall be suitable for fish, shellfish, and wildlife propagation and survival. The water quality shall be suitable for primary and secondary contact recreation, although other factors may limit the use for these purposes. The NYSDEC freshwater wetlands check-zone encompasses the entire study area between the two freshwater ponds. The freshwater wetlands check-zone is an area around mapped freshwater wetlands that should be checked for actual wetlands. This is required because mapped wetlands boundaries are not always accurate. Additionally, several of the USDA NRCS soil series in the general vicinity of the study area are on the National List of Hydric Soils.

A wetland delineation was conducted on May 8th, 2014 within the study area. Weather conditions were cloudy with intermittent light to moderate rain. There was also rain during several days preceding the site-visit. Three distinct vegetative communities were identified: one on the upland, rocky hillside south of the study area, one along the pond fringe and one forested floodplain area north of the unnamed tributary. The grassy area along the pond fringe was subject to disturbance in the form of mowing/maintenance and light vehicle access. The forested floodplain area was identified in the northern portion of the study area and extended east, upstream to the unnamed tributary and outside of the study area boundary. The westernmost boundary of this wetland community was delineated.

Wetland delineation resulted in one approximately 0.3-acre wetland (Wetland A) located in the study area in the strip of land between the two freshwater ponds. Wetland A is a palustrine emergent wetland along the fringe of the eastern pond. A second, approximately 1+ acre wetland (Wetland B), located primarily outside of the study area, is a palustrine forested floodplain wetland north of the unnamed tributary. Both of these areas show signs of current or historical disturbance by human activities including clearing, mowing, vehicle operation, and the presence of existing infrastructure.

4.1 Wetland A

Wetland A is an approximately 0.3-acre palustrine emergent wetland located on the fringe of the eastern pond in the study area (**Figure 6**). Wetland A also has a scrub-shrub component and a few trees at the southwestern corner of the pond outside of the mowed access area. A drainage channel from the slope in the southern portion of the study area meets the pond in a mucky area immediately south of the eastern pond. The un-mowed perimeter of the pond is dominated by rice cutgrass (*Leersia oryzoides*) and tussock sedge (*Carex stricta*) with small amounts of Japanese barberry (*Berberis thunbergii*) and multiflora rose (*Rosa multiflora*). One red maple (*Acer rubrum*) was also present in the sampling plot. The upper 8 inches of the soil profile was dominated by low chroma colors and a depleted soil matrix, which are indicative of hydric soils and periodic inundation. Redoximorphic features, or areas where the saturation of water has caused the iron and manganese present in the soil to migrate, concentrate, and then oxidize, are present within the soil profile below 8-inches in depth. Hydrologically, this area had a high water table, surface water, and soil saturation at the time of the delineation. Due to the rain preceding the delineation, some of these indicators have the potential to be atypical under normal weather circumstances, however given the geographic position, obligate wetland vegetation and hydric soil indicators, the observed hydrologic indicators are likely to be present throughout the growing season.

4.2 Wetland B

Wetland B is a palustrine floodplain forest to the north of the unnamed tributary and extends beyond the study area boundaries. The western-most boundary of Wetland B was delineated and is depicted on **Figure 6**. Skunk cabbage (*Symplocarpus foetidus*) and purple pitcher plant (*Sarracenia purpurea*) are the dominant herbaceous vegetation and red maple (*Acer rubrum*) and slippery elm (*Ulmus rubra*) are the dominant trees. The upper 6 inches of the soil profile was made up of soils with a low chroma matrix and signs of depletion, which are indicative of hydric soils. Hydrologically, microtopographic relief was present as a result of tussock forming grasses/sedges and mosses. Water-stained leaves, or leaves whose colors have been stripped and whose biodegradation has been slowed as a result of saturation, were present within depressions in the topography. Surface water, high ground-water table, and soil saturation were also present.

5.0 CONCLUSION

A wetland field delineation was conducted on May 8th, 2014, in accordance with methods outlined in the USACE 1987 "Wetlands Delineation Manual". Wetlands and waterways in the project area were identified, flagged, and recorded via GPS. Two separate wetlands, one approximately .3-acre and one 1+ acre wetlands were identified. Wetland vegetation, soils and hydrology were inventoried for these two wetlands and have been outlined within this report and its appendices.

6.0 REFERENCES

Lichvar, R.W., M. Butterwick, N.C. Melvin, and W.N. Kirchner. 2014. The National Wetland Plant List: 2014 Update of Wetland Ratings. Phytoneuron 2014-41: 1-42

New York State Department of Environmental Conservation (NYSDEC). 1991. New York Code of Rules and Regulations Part 701.8 Class C fresh surface water. Accessed from http://www.dec.ny.gov/regs/4592.html#15987

U.S. Army Corps of Engineers (USACE). 1987. Corps of Engineers Wetlands Delineation Manual Technical Report Y-87-1 U.S. Army Corps of Engineers Waterways Experiment Station, Vicksburg, Miss

U.S. Army Corps of Engineers (USACE). 2011. Regional Supplement to the Corps of Engineers Wetland Delineation Manual: Northcentral and Northeast Region (Version 2.0), ed. J. S. Wakeley, R. W. Lichvar, C. V. Noble, and J. F. Berkowitz. ERDC/EL TR-12-1. Vicksburg, MS: U.S. Army Engineer Research and Development Center.

U.S. Department of Agriculture Natural Resource Conservation Service (USDA NRCS). 2012. Hydrologic Soil Groups: Westchester County, New York. Accessed from http://efotg.sc.egov.usda.gov/references/public/NY/hsg_westchester.pdf

7.0 FIGURES

FIGURE 1. UNITED STATES GEOLOGIC SURVEY (USGS) CROTON FALLS QUADRANT

FIGURE 2. SITE LOCATION DIAGRAM

FIGURE 3. USFWS NATIONAL WETLANDS INVENTORY

FIGURE 4. NYSDEC FRESHWATER WETLANDS

FIGURE 5. USDA NRCS SOIL SERIES

FIGURE 6. WETLAND DELINEATION RESULTS

8.0 APPENDICES

APPENDIX A. NATIONAL WETLAND INVENTORY CLASSIFICATIONS

APPENDIX B. NYSDEC ENVIRONMENTAL RESOURCES MAPPER

APPENDIX C. HYDROLOGIC SOIL GROUPS FOR WESTCHESTER COUNTY, NEW YORK

APPENDIX D. SOIL SERIES DESCRIPTIONS

APPENDIX E. USACE WETLAND DETERMINATION DATA FORMS

APPENDIX F. PHOTOGRAPH LOG

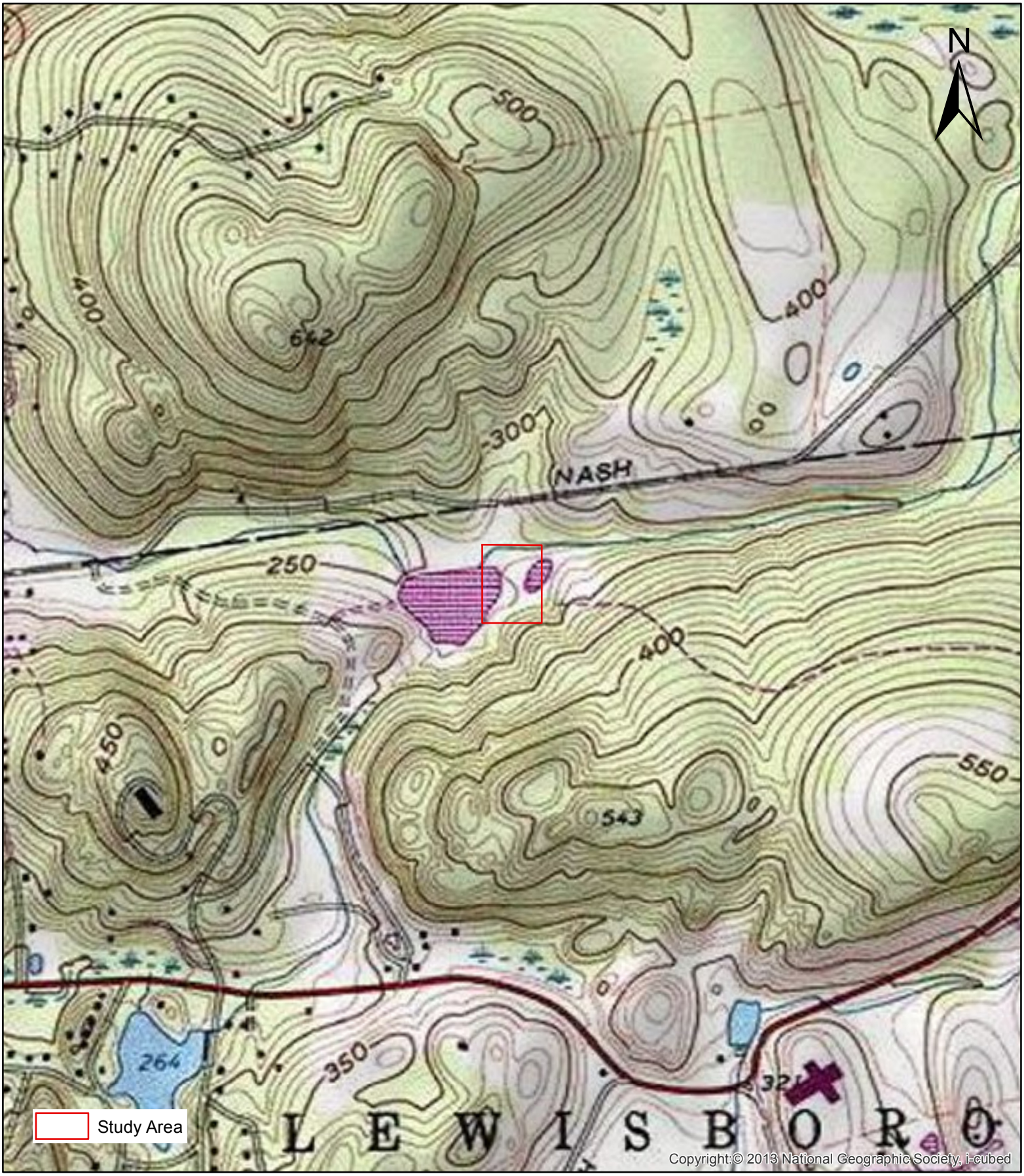

SCALE
0 400 800 1,200 1,600 Feet

USGS Croton Falls
Figure 1

HAZEN AND SAWYER
Environmental Engineers & Scientists

Wild Oaks Water System
Wild Oaks Wetland Delineation

SCALE

0 90 180 270 360 Feet

Site Location
Figure 2

HAZEN AND SAWYER
Environmental Engineers & Scientists

Wild Oaks Water System
Wild Oaks Wetland Delineation

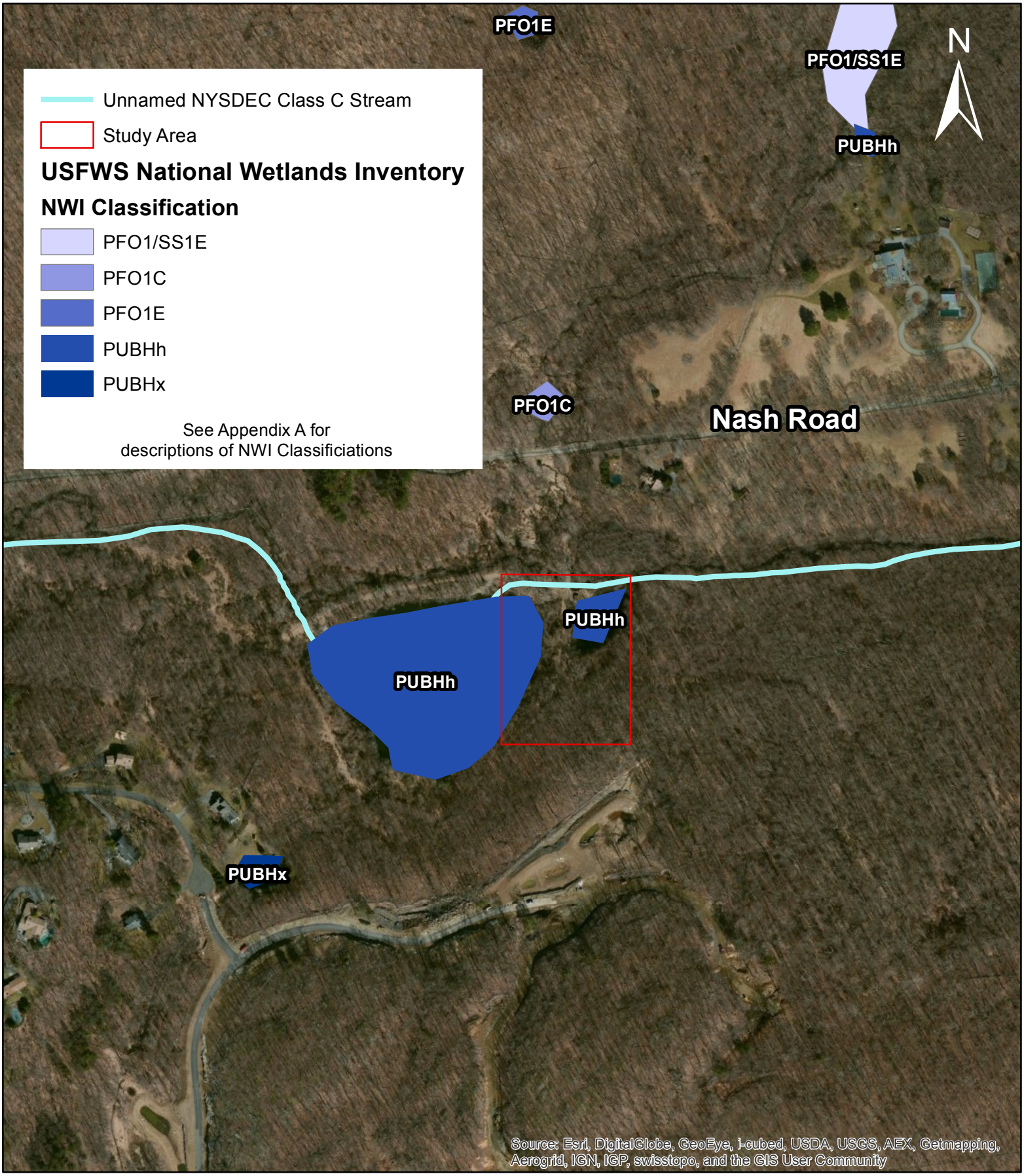

SCALE

0 180 360 540 720 Feet

USFWS National Wetlands Inventory
Figure 3

HAZEN AND SAWYER
Environmental Engineers & Scientists

Wild Oaks Water System
Wild Oaks Wetland Delineation

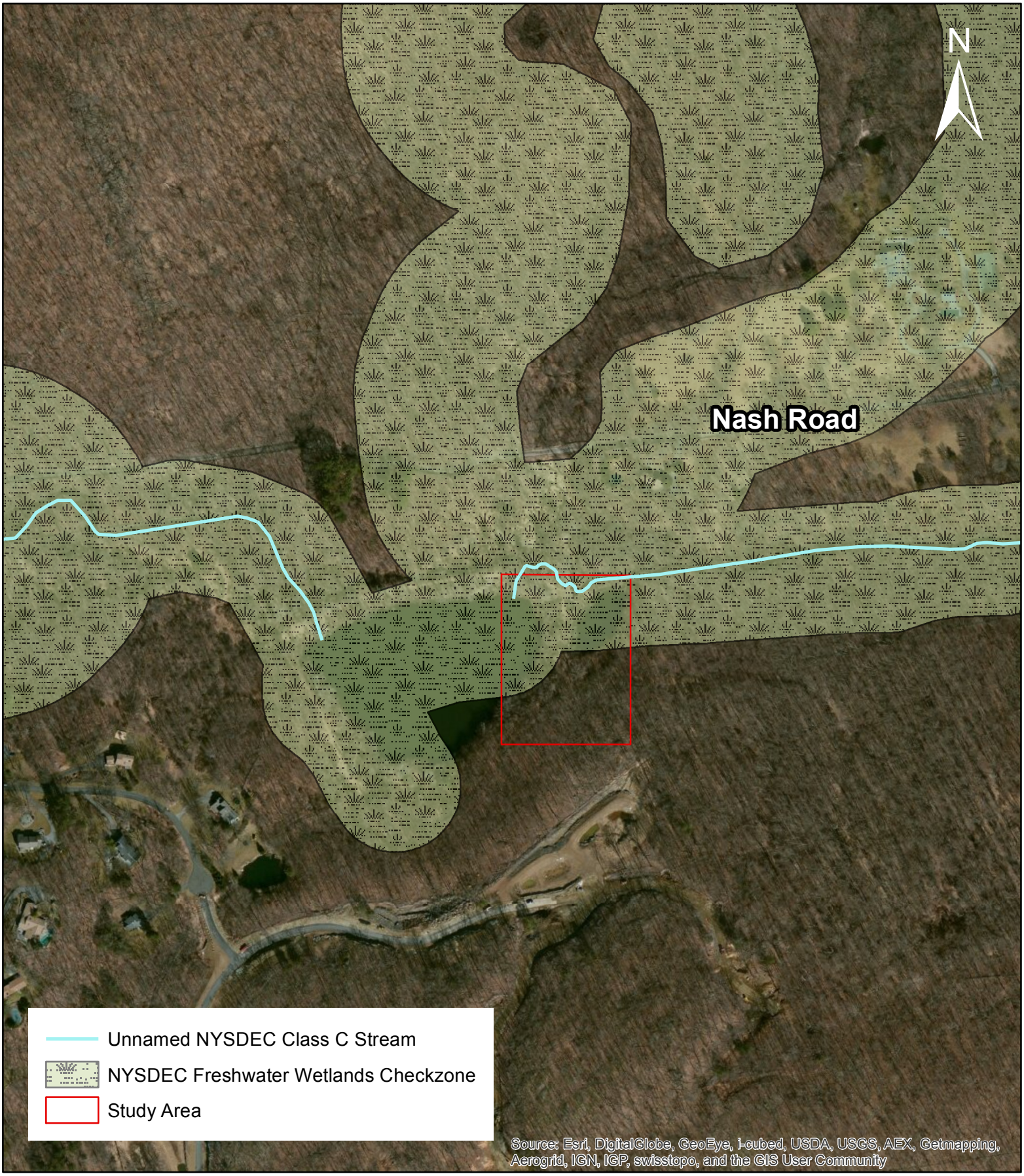

SCALE

0 180 360 540 720 Feet

NYSDEC Freshwater Wetlands
Figure 4

HAZEN AND SAWYER
Environmental Engineers & Scientists

Wild Oaks Water System
Wild Oaks Wetland Delineation

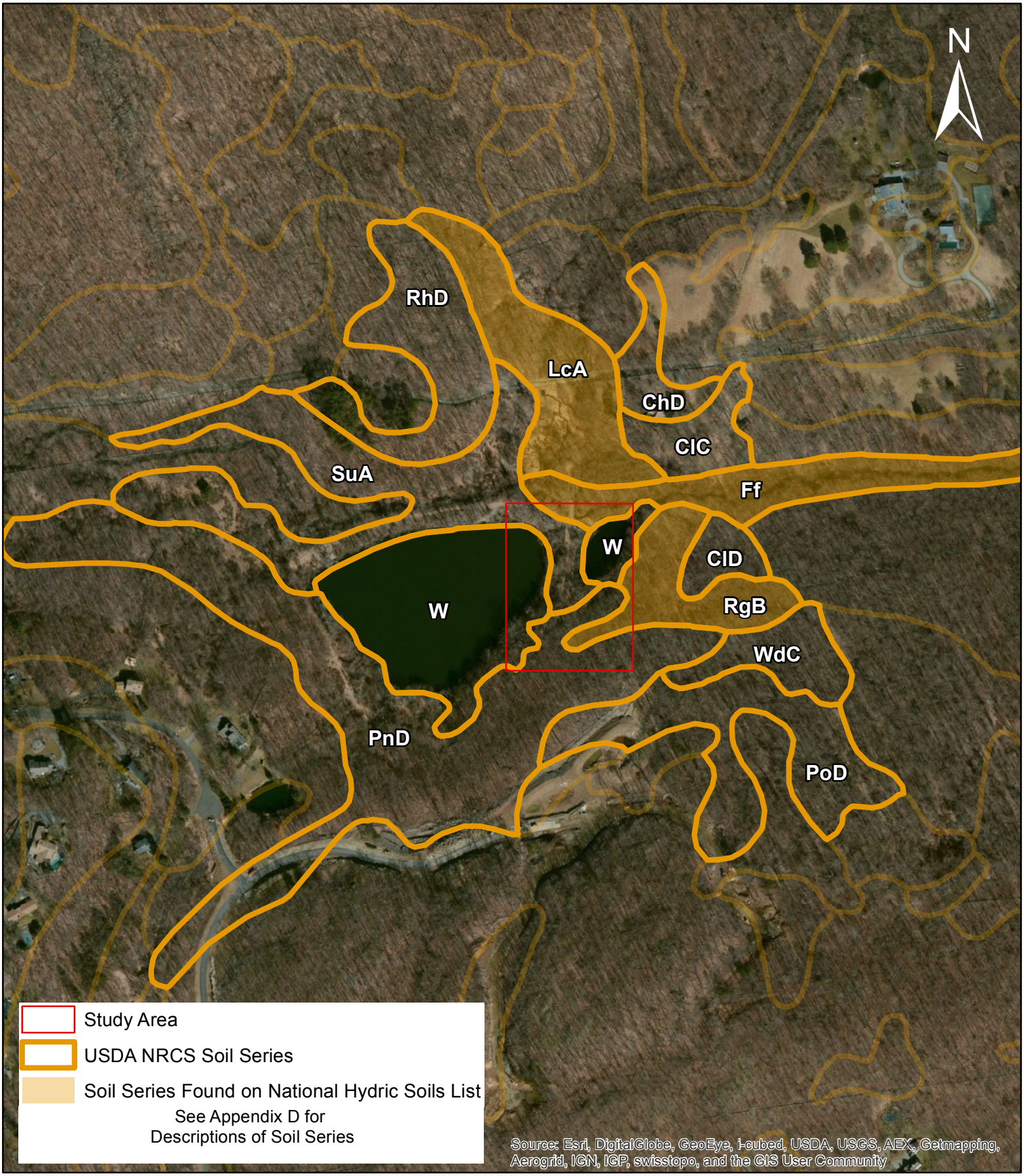

SCALE

0 180 360 540 720 Feet

USDA NRCS Soil Survey
Figure 5

HAZEN AND SAWYER
Environmental Engineers & Scientists

Wild Oaks Water System
Wild Oaks Wetland Delineation

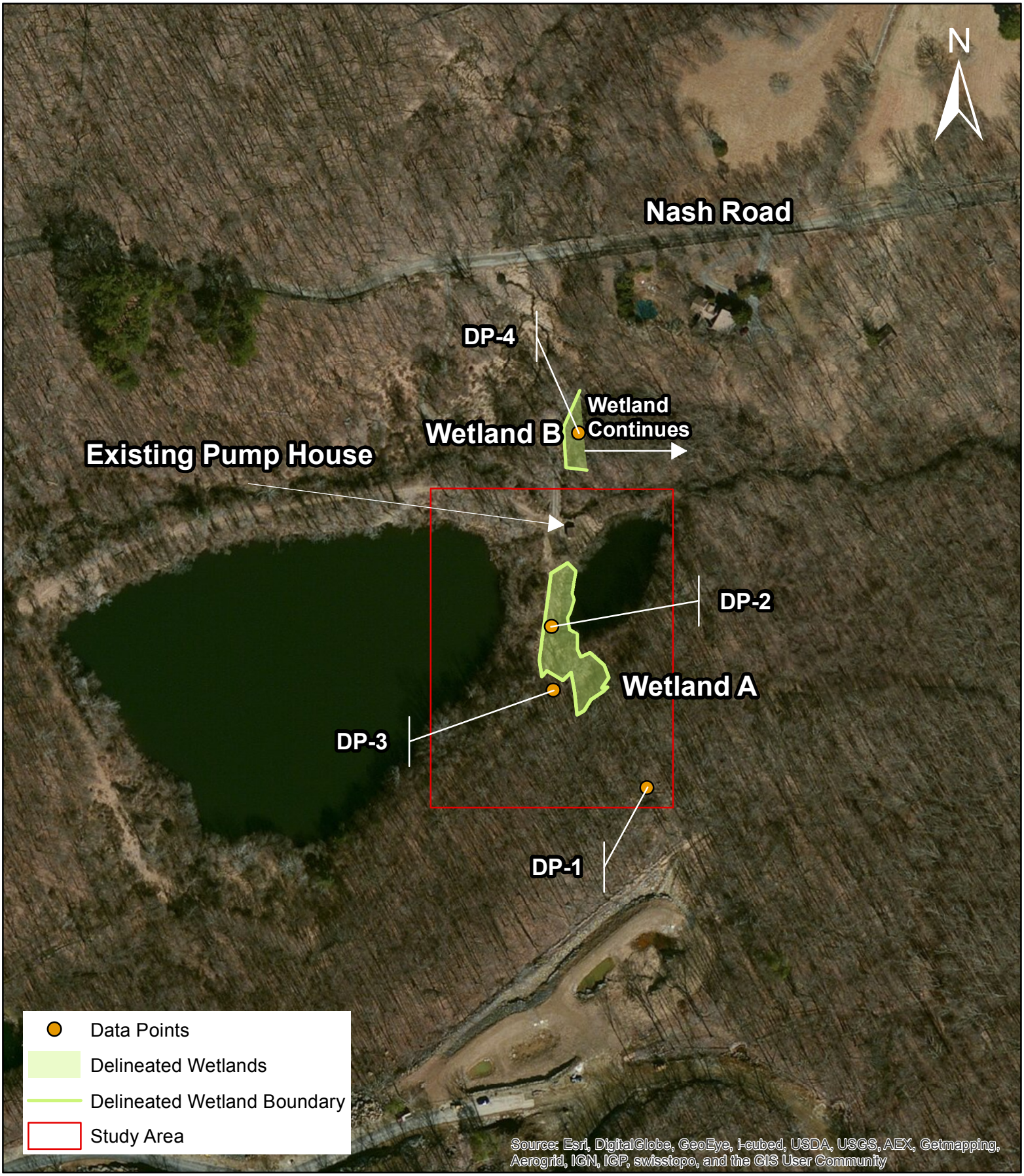

SCALE

0 90 180 270 360 Feet

Wetland Delineation
Figure 6

HAZEN AND SAWYER
Environmental Engineers & Scientists

Wild Oaks Water System
Wild Oaks Wetland Delineation

8.0 APPENDICES

APPENDIX A. NATIONAL WETLAND INVENTORY CLASSIFICATIONS

APPENDIX B. NYSDEC ENVIRONMENTAL RESOURCES MAPPER

APPENDIX C. HYDROLOGIC SOIL GROUPS FOR WESTCHESTER COUNTY, NEW YORK

APPENDIX D. SOIL SERIES DESCRIPTIONS

APPENDIX E. USACE WETLAND DETERMINATION DATA FORMS

APPENDIX F. PHOTOGRAPH LOG

Appendix A
National Wetlands Inventory Classification Descriptions

PFO1/SS1E

P System PALUSTRINE: The Palustrine System includes all nontidal wetlands dominated by trees, shrubs, emergents, mosses or lichens, and all such wetlands that occur in tidal areas where salinity due to ocean derived salts is below 0.5 ppt. Wetlands lacking such vegetation are also included if they exhibit all of the following characteristics: 1. are less than 8 hectares (20 acres); 2. do not have an active wave-formed or bedrock shoreline feature; 3. have at low water a depth less than 2 meters (6.6 feet) in the deepest part of the basin; 4. have a salinity due to ocean-derived salts of less than 0.5 ppt.

Subsystem :

FO Class FORESTED: Characterized by woody vegetation that is 6 m tall or taller.

1 Subclass Broad-Leaved Deciduous: Woody angiosperms (trees or shrubs) with relatively wide, flat leaves that are shed during the cold or dry season; e.g., black ash (*Fraxinus nigra*).

P System PALUSTRINE: The Palustrine System includes all nontidal wetlands dominated by trees, shrubs, emergents, mosses or lichens, and all such wetlands that occur in tidal areas where salinity due to ocean derived salts is below 0.5 ppt. Wetlands lacking such vegetation are also included if they exhibit all of the following characteristics: 1. are less than 8 hectares (20 acres); 2. do not have an active wave-formed or bedrock shoreline feature; 3. have at low water a depth less than 2 meters (6.6 feet) in the deepest part of the basin; 4. have a salinity due to ocean-derived salts of less than 0.5 ppt.

Subsystem :

SS Class SCRUB-SHRUB: Includes areas dominated by woody vegetation less than 6 m (20 feet) tall. The species include true shrubs, young trees (saplings), and trees or shrubs that are small or stunted because of environmental conditions.

1 Subclass Broad-Leaved Deciduous: Woody angiosperms (trees or shrubs) with relatively wide, flat leaves that are shed during the cold or dry season; e.g., black ash (*Fraxinus nigra*).

Modifier(s):

E WATER REGIME Seasonally Flooded/Saturated: Surface water is present for extended periods especially early in the growing season and when surface water is absent, substrate remains saturated near the surface for much of the growing season.

PFO1C

P System PALUSTRINE: The Palustrine System includes all nontidal wetlands dominated by trees, shrubs, emergents, mosses or lichens, and all such wetlands that occur in tidal areas where salinity due to ocean derived salts is below 0.5 ppt. Wetlands lacking such vegetation are also included if they exhibit all of the following characteristics: 1. are less than 8 hectares (20 acres); 2. do not have an active wave-formed or bedrock shoreline feature; 3. have at low water a depth less than 2 meters (6.6 feet) in the deepest part of the basin; 4. have a salinity due to ocean-derived salts of less than 0.5 ppt.

Subsystem :

FO Class FORESTED: Characterized by woody vegetation that is 6 m tall or taller.

1 Subclass Broad-Leaved Deciduous: Woody angiosperms (trees or shrubs) with relatively wide, flat leaves that are shed during the cold or dry season; e.g., black ash (*Fraxinus nigra*).

Modifier(s):

C WATER REGIME Seasonally Flooded: Surface water is present for extended periods especially early in the growing season, but is absent by the end of the growing season in most years. The water table after flooding ceases is variable, extending from saturated to the surface to a water table well below the ground surface.

PFO1E

P System PALUSTRINE: The Palustrine System includes all nontidal wetlands dominated by trees, shrubs, emergents, mosses or lichens, and all such wetlands that occur in tidal areas where salinity due to ocean derived salts is below 0.5 ppt. Wetlands lacking such vegetation are also included if they exhibit all of the following characteristics: 1. are less than 8 hectares (20 acres); 2. do not have an active wave-formed or bedrock shoreline feature; 3. have at low water a depth less than 2 meters (6.6 feet) in the deepest part of the basin; 4. have a salinity due to ocean-derived salts of less than 0.5 ppt.

Subsystem :

FO Class FORESTED: Characterized by woody vegetation that is 6 m tall or taller.

1 Subclass Broad-Leaved Deciduous: Woody angiosperms (trees or shrubs) with relatively wide, flat leaves that are shed during the cold or dry season; e.g., black ash (*Fraxinus nigra*).

Modifier(s):

E WATER REGIME Seasonally Flooded/Saturated: Surface water is present for extended periods especially early in the growing season and when surface water is absent, substrate remains saturated near the surface for much of the growing season.

PUBHh

P System PALUSTRINE: The Palustrine System includes all nontidal wetlands dominated by trees, shrubs, emergents, mosses or lichens, and all such wetlands that occur in tidal areas where salinity due to ocean derived salts is below 0.5 ppt. Wetlands lacking such vegetation are also included if they exhibit all of the following characteristics: 1. are less than 8 hectares (20 acres); 2. do not have an active wave-formed or bedrock shoreline feature; 3. have at low water a depth less than 2 meters (6.6 feet) in the deepest part of the basin; 4. have a salinity due to ocean-derived salts of less than 0.5 ppt.

Subsystem :

UB Class UNCONSOLIDATED BOTTOM: Includes all wetlands and deep-water habitats with at least 25% cover of particles smaller than stones (less than 6-7 cm), and a vegetative cover less than 30%.

Subclass :

Modifier(s):

H WATER REGIME Permanently Flooded: Water covers the land surface throughout the year in all years.

h SPECIAL MODIFIER Diked/Impounded: These wetlands have been created or modified by a man-made barrier or dam which obstructs the inflow or outflow of water. The descriptors ‘diked’ and ‘impounded’ have been combined into a single modifier since the observed effect on wetlands is similar. They have been combined here due to image interpretation limitations. For clarification of the extent of impoundment see discussion of Lacustrine System limits.

PUBHx

P System PALUSTRINE: The Palustrine System includes all nontidal wetlands dominated by trees, shrubs, emergents, mosses or lichens, and all such wetlands that occur in tidal areas where salinity due to ocean derived salts is below 0.5 ppt. Wetlands lacking such vegetation are also included if they exhibit all of the following characteristics: 1. are less than 8 hectares (20 acres); 2. do not have an active wave-formed or bedrock shoreline feature; 3. have at low water a depth less than 2 meters (6.6 feet) in the deepest part of the basin; 4. have a salinity due to ocean-derived salts of less than 0.5 ppt.

Subsystem :

UB Class UNCONSOLIDATED BOTTOM: Includes all wetlands and deepwater habitats with at least 25% cover of particles smaller than stones (less than 6-7 cm), and a vegetative cover less than 30%.

Subclass :

Modifier(s):

H WATER REGIME Permanently Flooded: Water covers the land surface throughout the year in all years.

x SPECIAL MODIFIER Excavated: Lies within a basin or channel that have been dug, gouged, blasted or suctioned through artificial means by man.

Appendix B
NYSDEC Environmental Resource Mapper

[print page] [close window]

Please set your printer orientation to "Landscape".

Freshwater Wetlands - NYSDEC Environmental Resource Mapper

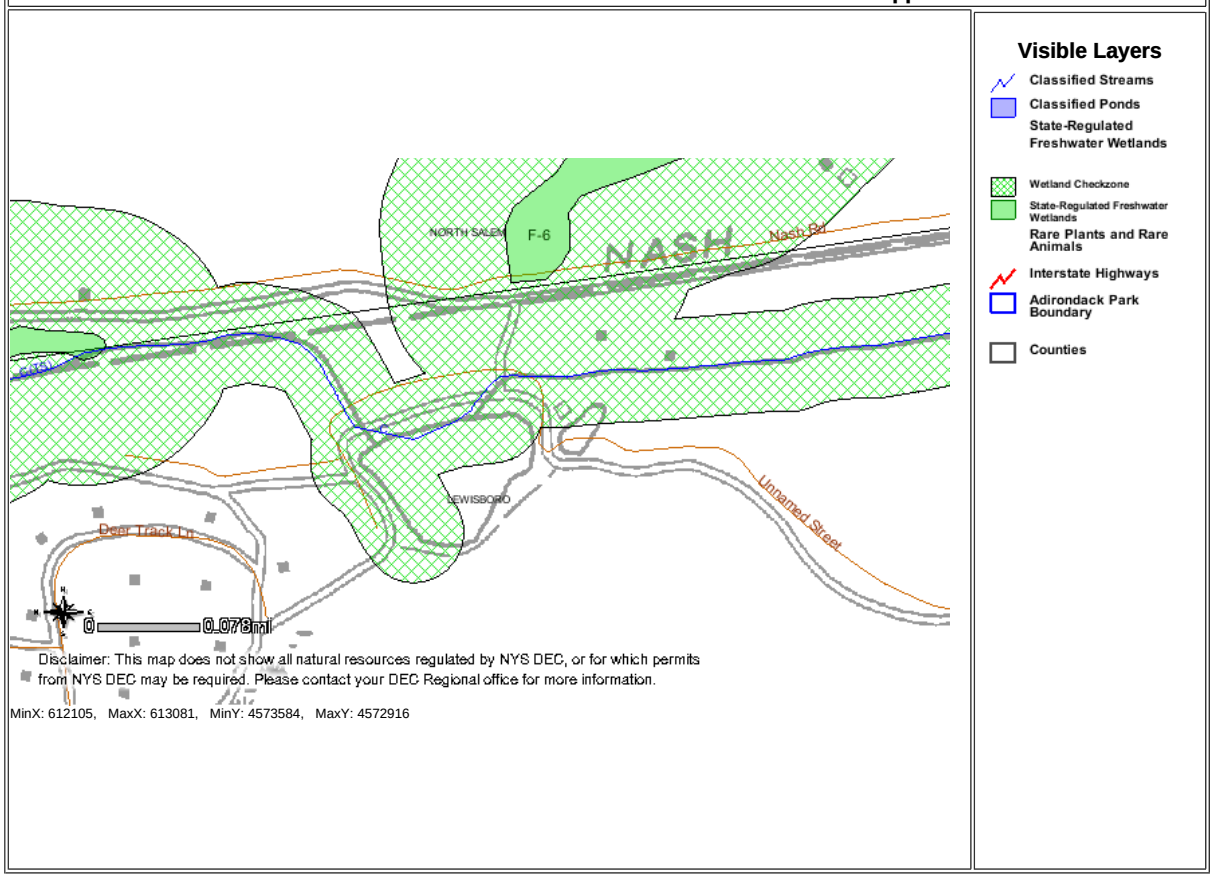

Disclaimer:This map was prepared by the New York State Department of Environmental Conservation using the most
current data available. It is deemed accurate but is not guaranteed. NYS DEC is not responsible for any inaccuracies
in the data and does not necessarily endorse any interpretations or products derived from the data.

Appendix C
Hydrologic Soil Groups for Westchester County, New York

Hydrologic Soil Groups

Westchester County, New York

December 2012

[This table of hydrologic soil group data will be updated on eFOTG as needed, in order to maintain consistency with the official SSURGO soil survey data.]

Map Unit Symbol	Map Unit Name	Component Name	Hydrologic Soil Group
Ce	Carlisle muck	Carlisle	A/D
ChB	Charlton loam, 2 to 8 percent slopes	Charlton	B
ChC	Charlton loam, 8 to 15 percent slopes	Charlton	B
ChD	Charlton loam, 15 to 25 percent slopes	Charlton	B
ChE	Charlton loam, 25 to 35 percent slopes	Charlton	B
ClB	Charlton loam, 2 to 8 percent slopes, very stony	Charlton	B
ClC	Charlton loam, 8 to 15 percent slopes, very stony	Charlton	B
ClD	Charlton loam, 15 to 25 percent slopes, very stony	Charlton	B
ClE	Charlton loam, 25 to 35 percent slopes, very stony	Charlton	B
ClF	Charlton loam, 35 to 45 percent slopes, very stony	Charlton	B
CrC	Charlton-Chatfield complex, rolling, very rocky	Charlton	B
CrC	Charlton-Chatfield complex, rolling, very rocky	Chatfield	B
CsD	Chatfield-Charlton complex, hilly, very rocky	Chatfield	B
CsD	Chatfield-Charlton complex, hilly, very rocky	Charlton	B
CtC	Chatfield-Hollis-Rock outcrop complex, rolling	Chatfield	B
CtC	Chatfield-Hollis-Rock outcrop complex, rolling	Hollis	D
CtC	Chatfield-Hollis-Rock outcrop complex, rolling	Rock outcrop	
CuD	Chatfield-Hollis-Rock outcrop complex, hilly	Chatfield	B
CuD	Chatfield-Hollis-Rock outcrop complex, hilly	Hollis	D
CuD	Chatfield-Hollis-Rock outcrop complex, hilly	Rock outcrop	
DAM	Dam	Dam	
Ff	Fluvaquents-Udifluvents complex, frequently flooded	Fluvaquents	A/D
Ff	Fluvaquents-Udifluvents complex, frequently flooded	Udifluvents	A
Fr	Fredon silt loam	Fredon	B/D
Fr	Fredon silt loam	Fredon	B/D
HnB	Hinckley gravelly loamy sand, 3 to 8 percent slopes	Hinckley	A
HnC	Hinckley gravelly loamy sand, 8 to 15 percent slopes	Hinckley	A
HnD	Hinckley gravelly loamy sand, 15 to 25 percent slopes	Hinckley	A
HrF	Hollis-Rock outcrop complex, very steep	Hollis	D
HrF	Hollis-Rock outcrop complex, very steep	Rock outcrop	
Ip	Ipswich mucky peat	Ipswich	A/D
KnB	Knickerbocker fine sandy loam, 2 to 8 percent slopes	Knickerbocker	A
KnC	Knickerbocker fine sandy loam, 8 to 15 percent slopes	Knickerbocker	A
LcA	Leicester loam, 0 to 3 percent slopes, stony	Leicester	A/D

Highlighted Soil Series indicate soil series present in the vicinity of the proposed project and are on the National List of Hydric Soils

Map Unit Symbol	Map Unit Name	Component Name	Hydrologic Soil Group
LcA	Leicester loam, 0 to 3 percent slopes, stony	Leicester	A/D
LcB	Leicester loam, 3 to 8 percent slopes, stony	Leicester	A/D
LcB	Leicester loam, 3 to 8 percent slopes, stony	Leicester	A/D
LeB	Leicester loam, 2 to 8 percent slopes, very stony	Leicester	A/D
LeB	Leicester loam, 2 to 8 percent slopes, very stony	Leicester	A/D
Pa	Palms muck	Palms	A/D
Pc	Palms and Carlisle soils, ponded	Palms	A/D
Pc	Palms and Carlisle soils, ponded	Carlisle	A/D
PnB	Paxton fine sandy loam, 2 to 8 percent slopes	Paxton	C
PnC	Paxton fine sandy loam, 8 to 15 percent slopes	Paxton	C
PnD	Paxton fine sandy loam, 15 to 25 percent slopes	Paxton	C
PoB	Paxton fine sandy loam, 2 to 8 percent slopes, very stony	Paxton	C
PoC	Paxton fine sandy loam, 8 to 15 percent slopes, very stony	Paxton	C
PoD	Paxton fine sandy loam, 15 to 25 percent slopes, very stony	Paxton	C
Pt	Pits, gravel	Pits, gravel	
Pv	Pits, quarry	Pits, quarry	
Pw	Pompton silt loam, loamy substratum	Pompton	B/D
Ra	Raynham silt loam	Raynham	C/D
RdA	Ridgebury loam, 0 to 3 percent slopes	Ridgebury	B/D
RdA	Ridgebury loam, 0 to 3 percent slopes	Ridgebury	B/D
RdB	Ridgebury loam, 3 to 8 percent slopes	Ridgebury	B/D
RdB	Ridgebury loam, 3 to 8 percent slopes	Ridgebury	B/D
RgB	Ridgebury loam, 2 to 8 percent slopes, very stony	Ridgebury	B/D
RgB	Ridgebury loam, 2 to 8 percent slopes, very stony	Ridgebury	B/D
RhA	Riverhead loam, 0 to 3 percent slopes	Riverhead	A
RhB	Riverhead loam, 3 to 8 percent slopes	Riverhead	A
RhC	Riverhead loam, 8 to 15 percent slopes	Riverhead	A
RhD	Riverhead loam, 15 to 25 percent slopes	Riverhead	A
RhE	Riverhead loam, 25 to 50 percent slopes	Riverhead	A
SbB	Stockbridge silt loam, 2 to 8 percent slopes	Stockbridge	C
Sh	Sun loam	Sun	C/D
Sm	Sun loam, extremely stony	Sun	C/D
SuA	Sutton loam, 0 to 3 percent slopes	Sutton	B
SuB	Sutton loam, 3 to 8 percent slopes	Sutton	B
Ub	Udorthents, smoothed	Udorthents	B
Uc	Udorthents, wet substratum	Udorthents	A/D
UdB	Unadilla silt loam, 2 to 6 percent slopes	Unadilla	B
Uf	Urban land	Urban land	
UhB	Urban land-Charlton complex, 2 to 8 percent slopes	Urban land	
UhB	Urban land-Charlton complex, 2 to 8 percent slopes	Charlton	B

Highlighted Soil Series indicate soil series present in the vicinity of the proposed project and are on the National List of Hydric Soils

Map Unit Symbol	Map Unit Name	Component Name	Hydrologic Soil Group
UhC	Urban land-Charlton complex, 8 to 15 percent slopes	Urban land	
UhC	Urban land-Charlton complex, 8 to 15 percent slopes	Charlton	B
UhD	Urban land-Charlton complex, 15 to 25 percent slopes	Urban land	
UhD	Urban land-Charlton complex, 15 to 25 percent slopes	Charlton	B
UlC	Urban land-Charlton-Chatfield complex, rolling, very rocky	Urban land	
UlC	Urban land-Charlton-Chatfield complex, rolling, very rocky	Charlton	B
UlC	Urban land-Charlton-Chatfield complex, rolling, very rocky	Chatfield	B
UlD	Urban land-Charlton-Chatfield complex, hilly, very rocky	Urban land	
UlD	Urban land-Charlton-Chatfield complex, hilly, very rocky	Charlton	B
UlD	Urban land-Charlton-Chatfield complex, hilly, very rocky	Chatfield	B
UmC	Urban land-Chatfield-Rock outcrop complex, rolling	Urban land	
UmC	Urban land-Chatfield-Rock outcrop complex, rolling	Chatfield	B
UmC	Urban land-Chatfield-Rock outcrop complex, rolling	Rock outcrop	
UpB	Urban land-Paxton complex, 2 to 8 percent slopes	Urban land	
UpB	Urban land-Paxton complex, 2 to 8 percent slopes	Paxton	C
UpC	Urban land-Paxton complex, 8 to 15 percent slopes	Urban land	
UpC	Urban land-Paxton complex, 8 to 15 percent slopes	Paxton	C
UpD	Urban land-Paxton complex, 15 to 25 percent slopes	Urban land	
UpD	Urban land-Paxton complex, 15 to 25 percent slopes	Paxton	C
UrB	Urban land-Ridgebury complex, 1 to 8 percent slopes	Urban land	
UrB	Urban land-Ridgebury complex, 1 to 8 percent slopes	Ridgebury	B/D
UrB	Urban land-Ridgebury complex, 1 to 8 percent slopes	Ridgebury	B/D
UvB	Urban land-Riverhead complex, 2 to 8 percent slopes	Urban land	
UvB	Urban land-Riverhead complex, 2 to 8 percent slopes	Riverhead	A
UvC	Urban land-Riverhead complex, 8 to 15 percent slopes	Urban land	
UvC	Urban land-Riverhead complex, 8 to 15 percent slopes	Riverhead	A
UwB	Urban land-Woodbridge complex, 2 to 8 percent slopes	Urban land	
UwB	Urban land-Woodbridge complex, 2 to 8 percent slopes	Woodbridge	C
W	Water	Water	
WdA	Woodbridge loam, 0 to 3 percent slopes	Woodbridge	C
WdB	Woodbridge loam, 3 to 8 percent slopes	Woodbridge	C
WdC	Woodbridge loam, 8 to 15 percent slopes	Woodbridge	C

Highlighted Soil Series indicate soil series present in the vicinity of the proposed project and are on the National List of Hydric Soils

Appendix D
Soil Series Descriptions

United States Department of Agriculture (USDA), Natural Resource Conservation Service (NRCS)
Web Soil Survey

Detailed Soil Map Units Report

The USDA NRCS Web Soil Survey is a digitized collection of soil surveys completed by the National Cooperative Soil Survey (NCSS). The NCSS is a nation-wide partnership of federal, state, and local agencies and institutions that conduct soil surveys for the purposes of understanding, managing, and conserving the nation's soil resources. This report was generated by inputting the project area into the Web Soil Survey and downloading one of the subsequent reports. This report, "Map Unit Description", is a brief description of the characteristics of the soil series present in the project area.

Detailed Soil Map Units

The map units delineated on the detailed soil maps in a soil survey represent the soils or miscellaneous areas in the survey area. The map unit descriptions in this report, along with the maps, can be used to determine the composition and properties of a unit.

A map unit delineation on a soil map represents an area dominated by one or more major kinds of soil or miscellaneous areas. A map unit is identified and named according to the taxonomic classification of the dominant soils. Within a taxonomic class there are precisely defined limits for the properties of the soils. On the landscape, however, the soils are natural phenomena, and they have the characteristic variability of all natural phenomena. Thus, the range of some observed properties may extend beyond the limits defined for a taxonomic class. Areas of soils of a single taxonomic class rarely, if ever, can be mapped without including areas of other taxonomic classes. Consequently, every map unit is made up of the soils or miscellaneous areas for which it is named and some minor components that belong to taxonomic classes other than those of the major soils.

Most minor soils have properties similar to those of the dominant soil or soils in the map unit, and thus they do not affect use and management. These are called noncontrasting, or similar, components. They may or may not be mentioned in a particular map unit description. Other minor components, however, have properties and behavioral characteristics divergent enough to affect use or to require different management. These are called contrasting, or dissimilar, components. They generally are in small areas and could not be mapped separately because of the scale used. Some small areas of strongly contrasting soils or miscellaneous areas are identified by a special symbol on the maps. If included in the database for a given area, the contrasting minor components are identified in the map unit descriptions along with some characteristics of each. A few areas of minor components may not have been observed, and consequently they are not mentioned in the descriptions, especially where the pattern was so complex that it was impractical to make enough observations to identify all the soils and miscellaneous areas on the landscape.

The presence of minor components in a map unit in no way diminishes the usefulness or accuracy of the data. The objective of mapping is not to delineate pure taxonomic classes but rather to separate the landscape into landforms or landform segments that have similar use and management requirements. The delineation of such segments on the map provides sufficient information for the development of resource plans. If intensive use of small areas is planned, however, onsite investigation is needed to define and locate the soils and miscellaneous areas.

An identifying symbol precedes the map unit name in the map unit descriptions. Each description includes general facts about the unit and gives important soil properties and qualities.

Soils that have profiles that are almost alike make up a *soil series*. All the soils of a series have major horizons that are similar in composition, thickness, and arrangement. Soils of a given series can differ in texture of the surface layer, slope, stoniness, salinity, degree of erosion, and other characteristics that affect their use. On the basis of such differences, a soil series is divided into *soil phases*. Most of the areas shown on the detailed soil maps are phases of soil series. The name of a soil phase commonly indicates a feature that affects use or management. For example, Alpha silt loam, 0 to 2 percent slopes, is a phase of the Alpha series.

Some map units are made up of two or more major soils or miscellaneous areas. These map units are complexes, associations, or undifferentiated groups.

A *complex* consists of two or more soils or miscellaneous areas in such an intricate pattern or in such small areas that they cannot be shown separately on the maps. The pattern and proportion of the soils or miscellaneous areas are somewhat similar in all areas. Alpha-Beta complex, 0 to 6 percent slopes, is an example.

An *association* is made up of two or more geographically associated soils or miscellaneous areas that are shown as one unit on the maps. Because of present or anticipated uses of the map units in the survey area, it was not considered practical or necessary to map the soils or miscellaneous areas separately. The pattern and relative proportion of the soils or miscellaneous areas are somewhat similar. Alpha-Beta association, 0 to 2 percent slopes, is an example.

An *undifferentiated group* is made up of two or more soils or miscellaneous areas that could be mapped individually but are mapped as one unit because similar interpretations can be made for use and management. The pattern and proportion of the soils or miscellaneous areas in a mapped area are not uniform. An area can be made up of only one of the major soils or miscellaneous areas, or it can be made up of all of them. Alpha and Beta soils, 0 to 2 percent slopes, is an example.

Some surveys include *miscellaneous areas*. Such areas have little or no soil material and support little or no vegetation. Rock outcrop is an example.

Additional information about the map units described in this report is available in other soil reports, which give properties of the soils and the limitations, capabilities, and potentials for many uses. Also, the narratives that accompany the soil reports define some of the properties included in the map unit descriptions.

Minor map unit components are excluded from this report.

Westchester County, New York

Map Unit: ChD—Charlton loam, 15 to 25 percent slopes

Component: Charlton (80%)

The Charlton component makes up 80 percent of the map unit. Slopes are 15 to 25 percent. This component is on hills, ridges, till plains. The parent material consists of acid loamy till derived mainly from schist, gneiss, or granite. Depth to a root restrictive layer is greater than 60 inches. The natural drainage class is well drained. Water movement in the most restrictive layer is moderately high. Available water to a depth of 60 inches is moderate. Shrink-swell potential is low. This soil is not flooded. It is not ponded. There is no zone of water saturation within a depth of 72 inches. Organic matter content in the surface horizon is about 4 percent. Nonirrigated land capability classification is 4e. This soil does not meet hydric criteria.

Component: Paxton (5%)

Generated brief soil descriptions are created for major components. The Paxton soil is a minor component.

Component: Chatfield (5%)

Generated brief soil descriptions are created for major components. The Chatfield soil is a minor component.

Component: Sutton (4%)

Generated brief soil descriptions are created for major components. The Sutton soil is a minor component.

Component: Knickerbocker (2%)

Generated brief soil descriptions are created for major components. The Knickerbocker soil is a minor component.

Component: Riverhead (2%)

Generated brief soil descriptions are created for major components. The Riverhead soil is a minor component.

Component: Charlton, very stony (1%)

Generated brief soil descriptions are created for major components. The Charlton soil is a minor component.

Component: Hollis (1%)

Generated brief soil descriptions are created for major components. The Hollis soil is a minor component.

Map Unit: ClC—Charlton loam, 8 to 15 percent slopes, very stony

Component: Charlton (80%)

The Charlton component makes up 80 percent of the map unit. Slopes are 8 to 15 percent. This component is on till plains, ridges, hills. The parent material consists of acid loamy till derived mainly from schist, gneiss, or granite. Depth to a root restrictive layer is greater than 60 inches. The natural drainage class is well drained. Water movement in the most restrictive layer is moderately high. Available water to a depth of 60 inches is moderate. Shrink-swell potential is low. This soil is not flooded. It is not ponded. There is no zone of water saturation within a depth of 72 inches. Organic matter content in the surface horizon is about 4 percent. Nonirrigated land capability classification is 6s. This soil does not meet hydric criteria.

Component: Chatfield (5%)

Generated brief soil descriptions are created for major components. The Chatfield soil is a minor component.

Component: Paxton (5%)

Generated brief soil descriptions are created for major components. The Paxton soil is a minor component.

Component: Sutton (5%)

Generated brief soil descriptions are created for major components. The Sutton soil is a minor component.

Component: Riverhead (2%)

Generated brief soil descriptions are created for major components. The Riverhead soil is a minor component.

Component: Knickerbocker (2%)

Generated brief soil descriptions are created for major components. The Knickerbocker soil is a minor component.

Component: Charlton, extremely stony (1%)

Generated brief soil descriptions are created for major components. The Charlton soil is a minor component.

Map Unit: ClD—Charlton loam, 15 to 25 percent slopes, very stony

Component: Charlton (80%)

The Charlton component makes up 80 percent of the map unit. Slopes are 15 to 25 percent. This component is on hills, ridges, till plains. The parent material consists of acid loamy till derived mainly from schist, gneiss, or granite. Depth to a root restrictive layer is greater than 60 inches. The natural drainage class is well drained. Water movement in the most restrictive layer is moderately high. Available water to a depth of 60 inches is moderate. Shrink-swell potential is low. This soil is not flooded. It is not ponded. There is no zone of water saturation within a depth of 72 inches. Organic matter content in the surface horizon is about 4 percent. Nonirrigated land capability classification is 6s. This soil does not meet hydric criteria.

Component: Paxton (5%)

Generated brief soil descriptions are created for major components. The Paxton soil is a minor component.

Component: Sutton (5%)

Generated brief soil descriptions are created for major components. The Sutton soil is a minor component.

Component: Chatfield (5%)

Generated brief soil descriptions are created for major components. The Chatfield soil is a minor component.

Component: Knickerbocker (2%)

Generated brief soil descriptions are created for major components. The Knickerbocker soil is a minor component.

Component: Riverhead (2%)

Generated brief soil descriptions are created for major components. The Riverhead soil is a minor component.

Component: Charlton, extremely stony (1%)

Generated brief soil descriptions are created for major components. The Charlton soil is a minor component.

Map Unit: Ff—Fluvaquents-Udifluvents complex, frequently flooded

Component: Fluvaquents (50%)

The Fluvaquents component makes up 50 percent of the map unit. Slopes are 0 to 3 percent. This component is on flood plains. The parent material consists of alluvium with highly variable texture. Depth to a root restrictive layer is greater than 60 inches. The natural drainage class is poorly drained. Water movement in the most restrictive layer is moderately low. Available water

to a depth of 60 inches is moderate. Shrink-swell potential is low. This soil is frequently flooded. It is frequently ponded. A seasonal zone of water saturation is at 0 inches during January, February, March, April, May, June, October, November, December. Organic matter content in the surface horizon is about 3 percent. Nonirrigated land capability classification is 5w. This soil meets hydric criteria.

Component: Udifluvents (35%)

The Udifluvents component makes up 35 percent of the map unit. Slopes are 0 to 3 percent. This component is on flood plains. The parent material consists of alluvium with a wide range of texture. Depth to a root restrictive layer is greater than 60 inches. The natural drainage class is well drained. Water movement in the most restrictive layer is moderately low. Available water to a depth of 60 inches is moderate. Shrink-swell potential is low. This soil is frequently flooded. It is not ponded. A seasonal zone of water saturation is at 48 inches during January, February, March, April, May, November, December. Organic matter content in the surface horizon is about 2 percent. Nonirrigated land capability classification is 5w. This soil does not meet hydric criteria.

Component: Sun (3%)

Generated brief soil descriptions are created for major components. The Sun soil is a minor component.

Component: Riverhead (2%)

Generated brief soil descriptions are created for major components. The Riverhead soil is a minor component.

Component: Ridgebury (2%)

Generated brief soil descriptions are created for major components. The Ridgebury soil is a minor component.

Component: Hinckley (2%)

Generated brief soil descriptions are created for major components. The Hinckley soil is a minor component.

Component: Leicester (2%)

Generated brief soil descriptions are created for major components. The Leicester soil is a minor component.

Component: Knickerbocker (2%)

Generated brief soil descriptions are created for major components. The Knickerbocker soil is a minor component.

Component: Carlisle (1%)

Generated brief soil descriptions are created for major components. The Carlisle soil is a minor component.

Component: Palms (1%)

Generated brief soil descriptions are created for major components. The Palms soil is a minor component.

Map Unit: LcA—Leicester loam, 0 to 3 percent slopes, stony

Component: Leicester, poorly drained (50%)

The Leicester, poorly drained component makes up 50 percent of the map unit. Slopes are 0 to 3 percent. This component is on depressions. The parent material consists of loamy acid till derived mostly from schist and gneiss. Depth to a root restrictive layer is greater than 60 inches. The natural drainage class is poorly drained. Water movement in the most restrictive layer is moderately high. Available water to a depth of 60 inches is moderate. Shrink-swell potential is low. This soil is not flooded. It is not ponded. A seasonal zone of water saturation is at 6 inches during January, February, March, April, May, November, December. Organic matter content in the surface horizon is about 5 percent. Nonirrigated land capability classification is 6s. This soil meets hydric criteria.

Component: Leicester, somewhat poorly drained (35%)

The Leicester, somewhat poorly drained component makes up 35 percent of the map unit. Slopes are 0 to 3 percent. This component is on depressions. The parent material consists of loamy acid till derived mostly from schist and gneiss. Depth to a root restrictive layer is greater than 60 inches. The natural drainage class is somewhat poorly drained. Water movement in the most restrictive layer is moderately high. Available water to a depth of 60 inches is moderate. Shrink-swell potential is low. This soil is not flooded. It is not ponded. A seasonal zone of water saturation is at 12 inches during January, February, March, April, May, November, December. Organic matter content in the surface horizon is about 5 percent. Nonirrigated land capability classification is 6s. This soil does not meet hydric criteria.

Component: Sun (7%)

Generated brief soil descriptions are created for major components. The Sun soil is a minor component.

Component: Sutton (5%)

Generated brief soil descriptions are created for major components. The Sutton soil is a minor component.

Component: Leicester, very stony (3%)

Generated brief soil descriptions are created for major components. The Leicester soil is a minor component.

Map Unit: PnD—Paxton fine sandy loam, 15 to 25 percent slopes

Component: Paxton (85%)

The Paxton component makes up 85 percent of the map unit. Slopes are 15 to 25 percent. This component is on till plains, drumlinoid ridges, hills. The parent material consists of acid loamy till derived mainly from crystalline rock. Depth to a root restrictive layer, densic material, is 18 to 40 inches. The natural drainage class is well drained. Water movement in the most restrictive layer is moderately low. Available water to a depth of 60 inches is moderate. Shrink-swell potential is low. This soil is not flooded. It is not ponded. A seasonal zone of water saturation is at 24 inches during February, March, April. Organic matter content in the surface horizon is about 4 percent. Nonirrigated land capability classification is 4e. This soil does not meet hydric criteria.

Component: Charlton (5%)

Generated brief soil descriptions are created for major components. The Charlton soil is a minor component.

Component: Woodbridge (5%)

Generated brief soil descriptions are created for major components. The Woodbridge soil is a minor component.

Component: Ridgebury (3%)

Generated brief soil descriptions are created for major components. The Ridgebury soil is a minor component.

Component: Paxton, very stony (2%)

Generated brief soil descriptions are created for major components. The Paxton soil is a minor component.

Map Unit: PoD—Paxton fine sandy loam, 15 to 25 percent slopes, very stony

Component: Paxton (85%)

The Paxton component makes up 85 percent of the map unit. Slopes are 15 to 25 percent. This component is on hills, drumlinoid ridges, till plains. The parent material consists of acid loamy till derived mainly from crystalline rock. Depth to a root restrictive layer, densic material, is 18 to 38 inches. The natural drainage class is well drained. Water movement in the most restrictive layer is moderately low. Available water to a depth of 60 inches is moderate. Shrink-swell potential is low. This soil is not flooded. It is not ponded. A seasonal zone of water saturation is at 24 inches during February, March, April. Organic matter content in the surface horizon is about 4 percent. Nonirrigated land capability classification is 6s. This soil does not meet hydric criteria.

Component: Woodbridge (5%)

Generated brief soil descriptions are created for major components. The Woodbridge soil is a minor component.

Component: Charlton (5%)

Generated brief soil descriptions are created for major components. The Charlton soil is a minor component.

Component: Ridgebury (3%)

Generated brief soil descriptions are created for major components. The Ridgebury soil is a minor component.

Component: Paxton, non-stony (2%)

Generated brief soil descriptions are created for major components. The Paxton soil is a minor component.

Map Unit: RgB—Ridgebury loam, 2 to 8 percent slopes, very stony

Component: Ridgebury, somewhat poorly drained (50%)

The Ridgebury, somewhat poorly drained component makes up 50 percent of the map unit. Slopes are 2 to 8 percent. This component is on hills, drumlinoid ridges, till plains. The parent material consists of loamy till derived mainly from granite, gneiss, and schist. Depth to a root restrictive layer, densic material, is 14 to 30 inches. The natural drainage class is somewhat poorly drained. Water movement in the most restrictive layer is moderately low. Available water to a depth of 60 inches is low. Shrink-swell potential is low. This soil is not flooded. It is not ponded. A seasonal zone of water saturation is at 12 inches during January, February, March, April, May, November, December. Organic matter content in the surface horizon is about 6 percent. Nonirrigated land capability classification is 6s. This soil does not meet hydric criteria.

Component: Ridgebury, poorly drained (35%)

The Ridgebury, poorly drained component makes up 35 percent of the map unit. Slopes are 2 to 8 percent. This component is on drumlinoid ridges, hills, till plains. The parent material consists of loamy till derived mainly from granite, gneiss, and schist. Depth to a root restrictive layer, densic material, is 14 to 30 inches. The natural drainage class is poorly drained. Water movement in the most restrictive layer is moderately low. Available water to a depth of 60 inches is low. Shrink-swell potential is low. This soil is not flooded. It is not ponded. A seasonal zone of water saturation is at 6 inches during January, February, March, April, May, November, December. Organic matter content in the surface horizon is about 6 percent. Nonirrigated land capability classification is 6s. This soil meets hydric criteria.

Component: Woodbridge (7%)

Generated brief soil descriptions are created for major components. The Woodbridge soil is a minor component.

Component: Sun (5%)

Generated brief soil descriptions are created for major components. The Sun soil is a minor component.

Component: Ridgebury, bouldery (3%)

Generated brief soil descriptions are created for major components. The Ridgebury soil is a minor component.

Map Unit: RhD—Riverhead loam, 15 to 25 percent slopes

Component: Riverhead (85%)

The Riverhead component makes up 85 percent of the map unit. Slopes are 15 to 25 percent. This component is on terraces, deltas. The parent material consists of loamy glaciofluvial deposits overlying stratified sand and gravel. Depth to a root restrictive layer is greater than 60 inches. The natural drainage class is well drained. Water movement in the most restrictive layer is high. Available water to a depth of 60 inches is low. Shrink-swell potential is low. This soil is not flooded. It is not ponded. There is no zone of water saturation within a depth of 72 inches. Organic matter content in the surface horizon is about 3 percent. Nonirrigated land capability classification is 4e. This soil does not meet hydric criteria.

Component: Pompton (5%)

Generated brief soil descriptions are created for major components. The Pompton soil is a minor component.

Component: Charlton (4%)

Generated brief soil descriptions are created for major components. The Charlton soil is a minor component.

Component: Hinckley (3%)

Generated brief soil descriptions are created for major components. The Hinckley soil is a minor component.

Component: Knickerbocker (3%)

Generated brief soil descriptions are created for major components. The Knickerbocker soil is a minor component.

Map Unit: SuA—Sutton loam, 0 to 3 percent slopes

Component: Sutton (85%)

The Sutton component makes up 85 percent of the map unit. Slopes are 0 to 3 percent. This component is on hills, till plains, ridges. The parent material consists of loamy till derived mainly from crystalline rock. Depth to a root restrictive layer is greater than 60 inches. The natural drainage class is moderately well drained. Water movement in the most restrictive layer is

moderately high. Available water to a depth of 60 inches is moderate. Shrink-swell potential is low. This soil is not flooded. It is not ponded. A seasonal zone of water saturation is at 24 inches during January, February, March, April, November, December. Organic matter content in the surface horizon is about 5 percent. Nonirrigated land capability classification is 2w. This soil does not meet hydric criteria.

Component: Leicester (5%)

Generated brief soil descriptions are created for major components. The Leicester soil is a minor component.

Component: Charlton (5%)

Generated brief soil descriptions are created for major components. The Charlton soil is a minor component.

Component: Woodbridge (3%)

Generated brief soil descriptions are created for major components. The Woodbridge soil is a minor component.

Component: Sutton, very stony (2%)

Generated brief soil descriptions are created for major components. The Sutton soil is a minor component.

Map Unit: W—Water

Component: Water (100%)

Generated brief soil descriptions are created for major soil components. The Water is a miscellaneous area.

Map Unit: WdC—Woodbridge loam, 8 to 15 percent slopes

Component: Woodbridge (80%)

The Woodbridge component makes up 80 percent of the map unit. Slopes are 8 to 15 percent. This component is on till plains, hills, drumlinoid ridges. The parent material consists of loamy acid till derived mainly from crystalline rock. Depth to a root restrictive layer, densic material, is 18 to 38 inches. The natural drainage class is moderately well drained. Water movement in the most restrictive layer is moderately low. Available water to a depth of 60 inches is moderate. Shrink-swell potential is low. This soil is not flooded. It is not ponded. A seasonal zone of water saturation is at 24 inches during January, February, March, April, May, November, December. Organic matter content in the surface horizon is about 4 percent. Nonirrigated land capability classification is 3e. This soil does not meet hydric criteria.

Component: Paxton (8%)

Generated brief soil descriptions are created for major components. The Paxton soil is a minor component.

Component: Ridgebury (5%)

Generated brief soil descriptions are created for major components. The Ridgebury soil is a minor component.

Component: Woodbridge, very stony (2%)

Generated brief soil descriptions are created for major components. The Woodbridge soil is a minor component.

Component: Sun (2%)

Generated brief soil descriptions are created for major components. The Sun soil is a minor component.

Component: Sutton (2%)

Generated brief soil descriptions are created for major components. The Sutton soil is a minor component.

Component: Urban land (1%)

Generated brief soil descriptions are created for major components. The Urban land soil is a minor component.

Appendix E
USACE Wetland Determination Data Forms

WETLAND DETERMINATION DATA FORM – Northcentral and Northeast Region

Project/Site: Wild Oaks Water System City/County: Lewisboro/Westchester Sampling Date: 5/8/2014
Applicant/Owner: New York American Water State: NY Sampling Point: DP1
Investigator(s): Joe Buckley, Ross Diamond Section, Township, Range: Town of Lewisboro
Landform (hillslope, terrace, etc.): hillslope Local relief (concave, convex, none): Convex Slope (%): 25
Subregion (LRR or MLRA): LRR R Lat: 41°18'7.911"N Long: 73°39'12.811"W Datum: NAD83
Soil Map Unit Name: Paxton Fine Sandy loam, 15-25% Slope (PnD) NWI classification: UPL
Are climatic / hydrologic conditions on the site typical for this time of year? Yes ____ No X (If no, explain in Remarks.)
Are Vegetation ____, Soil ____, or Hydrology ____ significantly disturbed? Are "Normal Circumstances" present? Yes ____ No X
Are Vegetation ____, Soil ____, or Hydrology ____ naturally problematic? (If needed, explain any answers in Remarks.)

SUMMARY OF FINDINGS – Attach site map showing sampling point locations, transects, important features, etc.

Hydrophytic Vegetation Present?	Yes ____	No X	**Is the Sampled Area within a Wetland?** Yes ____ No X
Hydric Soil Present?	Yes X	No	
Wetland Hydrology Present?	Yes ____	No X	If yes, optional Wetland Site ID: ____

Remarks: (Explain alternative procedures here or in a separate report.)

Significant precipitation was observed during and prior to the delineation.

HYDROLOGY

Wetland Hydrology Indicators:

Primary Indicators (minimum of one is required; check all that apply)

- ___ Surface Water (A1)
- ___ High Water Table (A2)
- ___ Saturation (A3)
- ___ Water Marks (B1)
- ___ Sediment Deposits (B2)
- ___ Drift Deposits (B3)
- ___ Algal Mat or Crust (B4)
- ___ Iron Deposits (B5)
- ___ Inundation Visible on Aerial Imagery (B7)
- ___ Sparsely Vegetated Concave Surface (B8)
- ___ Water-Stained Leaves (B9)
- ___ Aquatic Fauna (B13)
- ___ Marl Deposits (B15)
- ___ Hydrogen Sulfide Odor (C1)
- ___ Oxidized Rhizospheres on Living Roots (C3)
- ___ Presence of Reduced Iron (C4)
- ___ Recent Iron Reduction in Tilled Soils (C6)
- ___ Thin Muck Surface (C7)
- ___ Other (Explain in Remarks)

Secondary Indicators (minimum of two required)

- ___ Surface Soil Cracks (B6)
- X Drainage Patterns (B10)
- ___ Moss Trim Lines (B16)
- ___ Dry-Season Water Table (C2)
- ___ Crayfish Burrows (C8)
- ___ Saturation Visible on Aerial Imagery (C9)
- ___ Stunted or Stressed Plants (D1)
- ___ Geomorphic Position (D2)
- ___ Shallow Aquitard (D3)
- ___ Microtopographic Relief (D4)
- ___ FAC-Neutral Test (D5)

Field Observations:

Surface Water Present?	Yes ____	No X	Depth (inches):
Water Table Present?	Yes ____	No X	Depth (inches):
Saturation Present? (includes capillary fringe)	Yes ____	No X	Depth (inches):

Wetland Hydrology Present? Yes ____ No X

Describe Recorded Data (stream gauge, monitoring well, aerial photos, previous inspections), if available:

Remarks:

Due to rain in preceding days and on the day of delineation, ephemeral drainage channels were present on the hillside adjacent to DP1.

VEGETATION – Use scientific names of plants.

Sampling Point: DP7

Tree Stratum (Plot size: 30 ft²)	Absolute % Cover	Dominant Species?	Indicator Status
1. Fraxinus pennsylvanica	30	✓	FACW
2. Ulmus rubra	50	✓	FAC
3.			
4.			
5.			
6.			
7.			
	60 = Total Cover		

Sapling/Shrub Stratum (Plot size: 15 ft²)			
1. Lindera benzoin	10		FACW
2. Carpinus caroliniana	10		FAC
3. Berberis thunbergii	60	✓	FACU
4.			
5.			
6.			
7.			
	80 = Total Cover		

Herb Stratum (Plot size: 5 ft²)			
1. Polystichum acrostichoides	20	✓	FACU
2. Symplocarpus foetidus	5		OBL
3. Alliaria petiolata	20	✓	FACU
4.			
5.			
6.			
7.			
8.			
9.			
10.			
11.			
12.			
	45 = Total Cover		

Woody Vine Stratum (Plot size: 30 ft²)			
1. Vitis aestivalis	10	✓	FACU
2.			
3.			
4.			
	10 = Total Cover		

Dominance Test worksheet:

Number of Dominant Species That Are OBL, FACW, or FAC: 2 (A)

Total Number of Dominant Species Across All Strata: 6 (B)

Percent of Dominant Species That Are OBL, FACW, or FAC: 33% (A/B)

Prevalence Index worksheet:

Total % Cover of:		Multiply by:	
OBL species	5	x 1 =	5
FACW species	40	x 2 =	80
FAC species	40	x 3 =	120
FACU species	110	x 4 =	440
UPL species	0	x 5 =	0
Column Totals:	195 (A)		645 (B)

Prevalence Index = B/A = 3.31

Hydrophytic Vegetation Indicators:

___ 1 - Rapid Test for Hydrophytic Vegetation

___ 2 - Dominance Test is >50%

___ 3 - Prevalence Index is ≤3.0[1]

___ 4 - Morphological Adaptations[1] (Provide supporting data in Remarks or on a separate sheet)

___ Problematic Hydrophytic Vegetation[1] (Explain)

[1]Indicators of hydric soil and wetland hydrology must be present, unless disturbed or problematic.

Definitions of Vegetation Strata:

Tree – Woody plants 3 in. (7.6 cm) or more in diameter at breast height (DBH), regardless of height.

Sapling/shrub – Woody plants less than 3 in. DBH and greater than or equal to 3.28 ft (1 m) tall.

Herb – All herbaceous (non-woody) plants, regardless of size, and woody plants less than 3.28 ft tall.

Woody vines – All woody vines greater than 3.28 ft in height.

Hydrophytic Vegetation Present? Yes ___ No X

Remarks: (Include photo numbers here or on a separate sheet.)

SOIL

Sampling Point: DP1

Profile Description: (Describe to the depth needed to document the indicator or confirm the absence of indicators.)

Depth (inches)	Matrix Color (moist)	Matrix %	Redox Features Color (moist)	Redox %	Type[1]	Loc[2]	Texture	Remarks
0-10	10YR 4/2	100					SiCL	
10-18	10YR 4/4	100					SiL	

[1]Type: C=Concentration, D=Depletion, RM=Reduced Matrix, MS=Masked Sand Grains. [2]Location: PL=Pore Lining, M=Matrix.

Hydric Soil Indicators:

- ___ Histosol (A1)
- ___ Histic Epipedon (A2)
- ___ Black Histic (A3)
- ___ Hydrogen Sulfide (A4)
- ___ Stratified Layers (A5)
- ___ Depleted Below Dark Surface (A11)
- ___ Thick Dark Surface (A12)
- ___ Sandy Mucky Mineral (S1)
- ___ Sandy Gleyed Matrix (S4)
- ___ Sandy Redox (S5)
- ___ Stripped Matrix (S6)
- ___ Dark Surface (S7) **(LRR R, MLRA 149B)**
- ___ Polyvalue Below Surface (S8) **(LRR R, MLRA 149B)**
- ___ Thin Dark Surface (S9) **(LRR R, MLRA 149B)**
- ___ Loamy Mucky Mineral (F1) **(LRR K, L)**
- ___ Loamy Gleyed Matrix (F2)
- ___ Depleted Matrix (F3)
- ___ Redox Dark Surface (F6)
- ___ Depleted Dark Surface (F7)
- ___ Redox Depressions (F8)

Indicators for Problematic Hydric Soils[3]:

- ___ 2 cm Muck (A10) **(LRR K, L, MLRA 149B)**
- ___ Coast Prairie Redox (A16) **(LRR K, L, R)**
- ___ 5 cm Mucky Peat or Peat (S3) **(LRR K, L, R)**
- ___ Dark Surface (S7) **(LRR K, L, M)**
- ___ Polyvalue Below Surface (S8) **(LRR K, L)**
- ___ Thin Dark Surface (S9) **(LRR K, L)**
- ___ Iron-Manganese Masses (F12) **(LRR K, L, R)**
- ___ Piedmont Floodplain Soils (F19) **(MLRA 149B)**
- ___ Mesic Spodic (TA6) **(MLRA 144A, 145, 149B)**
- ___ Red Parent Material (F21)
- ___ Very Shallow Dark Surface (TF12)
- ___ Other (Explain in Remarks)

[3]Indicators of hydrophytic vegetation and wetland hydrology must be present, unless disturbed or problematic.

Restrictive Layer (if observed):

Type:_____

Depth (inches):_____

Hydric Soil Present? Yes _____ No X

Remarks:

Some refusal due to rocks. No evidence of redox concentrations or pore linings that would indicate a depleted matrix.

WETLAND DETERMINATION DATA FORM – Northcentral and Northeast Region

Project/Site: Wild Oaks Water Supply City/County: Lewisboro/Westchester Sampling Date: 5/8/14

Applicant/Owner: New York American Water State: NY Sampling Point: DP2

Investigator(s): Joe Butler, Ross Drummond Section, Township, Range: Town of Lewisboro

Landform (hillslope, terrace, etc.): Maintained Access Local relief (concave, convex, none): Concave Slope (%): 0

Subregion (LRR or MLRA): LRR R Lat: 41°18'10.545"N Long: 73°39'14.861"W Datum: NAD83

Soil Map Unit Name: (SnA) Sutton loam, 0-3% slope NWI classification: PEM

Are climatic / hydrologic conditions on the site typical for this time of year? Yes ____ No X (If no, explain in Remarks.)

Are Vegetation X, Soil ____, or Hydrology ____ significantly disturbed? Are "Normal Circumstances" present? Yes ____ No X

Are Vegetation ____, Soil ____, or Hydrology ____ naturally problematic? (If needed, explain any answers in Remarks.)

SUMMARY OF FINDINGS – Attach site map showing sampling point locations, transects, important features, etc.

Hydrophytic Vegetation Present?	Yes X No	Is the Sampled Area within a Wetland?	Yes X No
Hydric Soil Present?	Yes X No		
Wetland Hydrology Present?	Yes X No	If yes, optional Wetland Site ID:	Wetland A

Remarks: (Explain alternative procedures here or in a separate report.)

Significant precipitation was observed prior to and during the delineation. The data point is within a mowed/maintained area with mostly herbaceous vegetation. Wetland is along the fringe of the pond.

HYDROLOGY

Wetland Hydrology Indicators:

Primary Indicators (minimum of one is required; check all that apply)

- X Surface Water (A1)
- X High Water Table (A2)
- X Saturation (A3)
- ___ Water Marks (B1)
- ___ Sediment Deposits (B2)
- ___ Drift Deposits (B3)
- ___ Algal Mat or Crust (B4)
- ___ Iron Deposits (B5)
- ___ Inundation Visible on Aerial Imagery (B7)
- ___ Sparsely Vegetated Concave Surface (B8)
- ___ Water-Stained Leaves (B9)
- ___ Aquatic Fauna (B13)
- ___ Marl Deposits (B15)
- ___ Hydrogen Sulfide Odor (C1)
- ___ Oxidized Rhizospheres on Living Roots (C3)
- ___ Presence of Reduced Iron (C4)
- ___ Recent Iron Reduction in Tilled Soils (C6)
- ___ Thin Muck Surface (C7)
- ___ Other (Explain in Remarks)

Secondary Indicators (minimum of two required)

- ___ Surface Soil Cracks (B6)
- ___ Drainage Patterns (B10)
- ___ Moss Trim Lines (B16)
- ___ Dry-Season Water Table (C2)
- ___ Crayfish Burrows (C8)
- ___ Saturation Visible on Aerial Imagery (C9)
- ___ Stunted or Stressed Plants (D1)
- ___ Geomorphic Position (D2)
- ___ Shallow Aquitard (D3)
- ___ Microtopographic Relief (D4)
- ___ FAC-Neutral Test (D5)

Field Observations:

Surface Water Present?	Yes X	No ____	Depth (inches): 1-2"
Water Table Present?	Yes X	No ____	Depth (inches): 0"
Saturation Present? (includes capillary fringe)	Yes X	No ____	Depth (inches): 0"

Wetland Hydrology Present? Yes X No

Describe Recorded Data (stream gauge, monitoring well, aerial photos, previous inspections), if available:

Remarks:

VEGETATION – Use scientific names of plants.

Sampling Point: DP2

Tree Stratum (Plot size: 30 ft²)	Absolute % Cover	Dominant Species?	Indicator Status
1. Acer rubrum	10	✓	FAC
2.			
3.			
4.			
5.			
6.			
7.			
	10 = Total Cover		

Sapling/Shrub Stratum (Plot size: 15 ft²)			
1. Berberis thunbergii	10	✓	FACU
2. Rosa multiflora	5		FACU
3.			
4.			
5.			
6.			
7.			
	15 = Total Cover		

Herb Stratum (Plot size: 5 ft²)			
1. Leersia oryzoides	20	✓	OBL
2. Carex stricta	20	✓	OBL
3. Mentha arvensis	10		FACW
4. Carex alopecoidea	5		FACW
5.			
6.			
7.			
8.			
9.			
10.			
11.			
12.			
	55 = Total Cover		

Woody Vine Stratum (Plot size: 30 ft²)			
1.			
2.			
3.			
4.			
	0 = Total Cover		

Dominance Test worksheet:

Number of Dominant Species That Are OBL, FACW, or FAC: 3 (A)

Total Number of Dominant Species Across All Strata: 4 (B)

Percent of Dominant Species That Are OBL, FACW, or FAC: 75% (A/B)

Prevalence Index worksheet:

Total % Cover of:		Multiply by:	
OBL species	40	x 1 =	40
FACW species	15	x 2 =	30
FAC species	10	x 3 =	30
FACU species	15	x 4 =	60
UPL species		x 5 =	
Column Totals:	80 (A)		180 (B)

Prevalence Index = B/A = 2.25

Hydrophytic Vegetation Indicators:

- ___ 1 - Rapid Test for Hydrophytic Vegetation
- ✓ 2 - Dominance Test is >50%
- ✓ 3 - Prevalence Index is ≤3.0[1]
- ___ 4 - Morphological Adaptations[1] (Provide supporting data in Remarks or on a separate sheet)
- ___ Problematic Hydrophytic Vegetation[1] (Explain)

[1]Indicators of hydric soil and wetland hydrology must be present, unless disturbed or problematic.

Definitions of Vegetation Strata:

Tree – Woody plants 3 in. (7.6 cm) or more in diameter at breast height (DBH), regardless of height.

Sapling/shrub – Woody plants less than 3 in. DBH and greater than or equal to 3.28 ft (1 m) tall.

Herb – All herbaceous (non-woody) plants, regardless of size, and woody plants less than 3.28 ft tall.

Woody vines – All woody vines greater than 3.28 ft in height.

Hydrophytic Vegetation Present? Yes ✓ No

Remarks: (Include photo numbers here or on a separate sheet.)

Area is mowed and subject to vehicle traffic.

SOIL

Sampling Point: DP2

Profile Description: (Describe to the depth needed to document the indicator or confirm the absence of indicators.)

Depth (inches)	Matrix Color (moist)	Matrix %	Redox Features Color (moist)	Redox Features %	Type[1]	Loc[2]	Texture	Remarks
0-8	10YR 5/1	100					SiCL	
8-20	10YR 6/2	60	10YR 5/4	40	C	M	SiCL	

[1]Type: C=Concentration, D=Depletion, RM=Reduced Matrix, MS=Masked Sand Grains. [2]Location: PL=Pore Lining, M=Matrix.

Hydric Soil Indicators:

- ___ Histosol (A1)
- ___ Histic Epipedon (A2)
- ___ Black Histic (A3)
- ___ Hydrogen Sulfide (A4)
- ___ Stratified Layers (A5)
- ___ Depleted Below Dark Surface (A11)
- ___ Thick Dark Surface (A12)
- ___ Sandy Mucky Mineral (S1)
- ___ Sandy Gleyed Matrix (S4)
- ___ Sandy Redox (S5)
- ___ Stripped Matrix (S6)
- ___ Dark Surface (S7) **(LRR R, MLRA 149B)**
- ___ Polyvalue Below Surface (S8) **(LRR R, MLRA 149B)**
- ___ Thin Dark Surface (S9) **(LRR R, MLRA 149B)**
- ___ Loamy Mucky Mineral (F1) **(LRR K, L)**
- ___ Loamy Gleyed Matrix (F2)
- X Depleted Matrix (F3)
- ___ Redox Dark Surface (F6)
- ___ Depleted Dark Surface (F7)
- ___ Redox Depressions (F8)

Indicators for Problematic Hydric Soils[3]:

- ___ 2 cm Muck (A10) **(LRR K, L, MLRA 149B)**
- ___ Coast Prairie Redox (A16) **(LRR K, L, R)**
- ___ 5 cm Mucky Peat or Peat (S3) **(LRR K, L, R)**
- ___ Dark Surface (S7) **(LRR K, L, M)**
- ___ Polyvalue Below Surface (S8) **(LRR K, L)**
- ___ Thin Dark Surface (S9) **(LRR K, L)**
- ___ Iron-Manganese Masses (F12) **(LRR K, L, R)**
- ___ Piedmont Floodplain Soils (F19) **(MLRA 149B)**
- ___ Mesic Spodic (TA6) **(MLRA 144A, 145, 149B)**
- ___ Red Parent Material (F21)
- ___ Very Shallow Dark Surface (TF12)
- ___ Other (Explain in Remarks)

[3]Indicators of hydrophytic vegetation and wetland hydrology must be present, unless disturbed or problematic.

Restrictive Layer (if observed):

Type:_____

Depth (inches):_____

Hydric Soil Present? Yes X No ___

Remarks:

WETLAND DETERMINATION DATA FORM – Northcentral and Northeast Region

Project/Site: Wild Oaks Water Supply City/County: Lewisboro/Westchester Sampling Date: 5/8/14

Applicant/Owner: New York American Water State: NY Sampling Point: DP3

Investigator(s): Jic Bentley, Ross Dimmond Section, Township, Range: Town of Lewisboro

Landform (hillslope, terrace, etc.): Hillslope Local relief (concave, convex, none): Convex Slope (%): 3-5

Subregion (LRR or MLRA): LRR R Lat: 41°18'9.524"N Long: 73°39'14.909"W Datum: NAD83

Soil Map Unit Name: PhD Paxton fine sandy loam / RaB Ridgebury loam, 2-8% slope, very stony NWI classification: UPL

Are climatic / hydrologic conditions on the site typical for this time of year? Yes _____ No X (If no, explain in Remarks.)

Are Vegetation X, Soil _____, or Hydrology _____ significantly disturbed? Are "Normal Circumstances" present? Yes _____ No X

Are Vegetation _____, Soil _____, or Hydrology _____ naturally problematic? (If needed, explain any answers in Remarks.)

SUMMARY OF FINDINGS – Attach site map showing sampling point locations, transects, important features, etc.

Hydrophytic Vegetation Present?	Yes _____	No X	**Is the Sampled Area within a Wetland?** Yes _____ No X
Hydric Soil Present?	Yes _____	No X	If yes, optional Wetland Site ID: _____
Wetland Hydrology Present?	Yes _____	No X	

Remarks: (Explain alternative procedures here or in a separate report.)

Significant precipitation was observed during and prior to the delineation. The data point was taken in a mowed/maintained area with mostly herbaceous vegetation.

HYDROLOGY

Wetland Hydrology Indicators:

Primary Indicators (minimum of one is required; check all that apply)

- ___ Surface Water (A1)
- ___ High Water Table (A2)
- ___ Saturation (A3)
- ___ Water Marks (B1)
- ___ Sediment Deposits (B2)
- ___ Drift Deposits (B3)
- ___ Algal Mat or Crust (B4)
- ___ Iron Deposits (B5)
- ___ Inundation Visible on Aerial Imagery (B7)
- ___ Sparsely Vegetated Concave Surface (B8)
- ___ Water-Stained Leaves (B9)
- ___ Aquatic Fauna (B13)
- ___ Marl Deposits (B15)
- ___ Hydrogen Sulfide Odor (C1)
- ___ Oxidized Rhizospheres on Living Roots (C3)
- ___ Presence of Reduced Iron (C4)
- ___ Recent Iron Reduction in Tilled Soils (C6)
- ___ Thin Muck Surface (C7)
- ___ Other (Explain in Remarks)

Secondary Indicators (minimum of two required)

- ___ Surface Soil Cracks (B6)
- ___ Drainage Patterns (B10)
- ___ Moss Trim Lines (B16)
- ___ Dry-Season Water Table (C2)
- ___ Crayfish Burrows (C8)
- ___ Saturation Visible on Aerial Imagery (C9)
- ___ Stunted or Stressed Plants (D1)
- ___ Geomorphic Position (D2)
- ___ Shallow Aquitard (D3)
- ___ Microtopographic Relief (D4)
- ___ FAC-Neutral Test (D5)

Field Observations:

Surface Water Present?	Yes _____	No X	Depth (inches):
Water Table Present?	Yes _____	No X	Depth (inches):
Saturation Present? (includes capillary fringe)	Yes _____	No X	Depth (inches):

Wetland Hydrology Present? Yes _____ No X

Describe Recorded Data (stream gauge, monitoring well, aerial photos, previous inspections), if available:

Remarks:

VEGETATION – Use scientific names of plants.

Sampling Point: DP3

Tree Stratum (Plot size: 30 ft²)	Absolute % Cover	Dominant Species?	Indicator Status
1.			
2.			
3.			
4.			
5.			
6.			
7.			
	0 = Total Cover		

Sapling/Shrub Stratum (Plot size: 15 ft²)	Absolute % Cover	Dominant Species?	Indicator Status
1. Berberis thunbergii	10	✓	FACU
2.			
3.			
4.			
5.			
6.			
7.			
	10 = Total Cover		

Herb Stratum (Plot size: 5 ft²)	Absolute % Cover	Dominant Species?	Indicator Status
1. Microstegium vimineum	40	✓	FAC
2. Onoclea sensibilis	5		FACW
3. Mentha requieni	40	✓	NL
4.			
5.			
6.			
7.			
8.			
9.			
10.			
11.			
12.			
	85 = Total Cover		

Woody Vine Stratum (Plot size: 30 ft²)	Absolute % Cover	Dominant Species?	Indicator Status
1.			
2.			
3.			
4.			
	0 = Total Cover		

Dominance Test worksheet:

Number of Dominant Species That Are OBL, FACW, or FAC: 1 (A)

Total Number of Dominant Species Across All Strata: 3 (B)

Percent of Dominant Species That Are OBL, FACW, or FAC: 33% (A/B)

Prevalence Index worksheet:

Total % Cover of:		Multiply by:	
OBL species	0	x 1 =	0
FACW species	5	x 2 =	10
FAC species	40	x 3 =	120
FACU species	10	x 4 =	40
UPL species	0	x 5 =	0
Column Totals:	55 (A)		170 (B)

Prevalence Index = B/A = 3.1

Hydrophytic Vegetation Indicators:

___ 1 - Rapid Test for Hydrophytic Vegetation

___ 2 - Dominance Test is >50%

___ 3 - Prevalence Index is ≤3.0[1]

___ 4 - Morphological Adaptations[1] (Provide supporting data in Remarks or on a separate sheet)

___ Problematic Hydrophytic Vegetation[1] (Explain)

[1]Indicators of hydric soil and wetland hydrology must be present, unless disturbed or problematic.

Definitions of Vegetation Strata:

Tree – Woody plants 3 in. (7.6 cm) or more in diameter at breast height (DBH), regardless of height.

Sapling/shrub – Woody plants less than 3 in. DBH and greater than or equal to 3.28 ft (1 m) tall.

Herb – All herbaceous (non-woody) plants, regardless of size, and woody plants less than 3.28 ft tall.

Woody vines – All woody vines greater than 3.28 ft in height.

Hydrophytic Vegetation Present? Yes ___ No X

Remarks: (Include photo numbers here or on a separate sheet.)

Mowed / disturbed area.

SOIL

Sampling Point: DP3

Profile Description: (Describe to the depth needed to document the indicator or confirm the absence of indicators.)

Depth (inches)	Matrix Color (moist)	Matrix %	Redox Features Color (moist)	Redox %	Type[1]	Loc[2]	Texture	Remarks
0-10	10YR 3/4	100					SiCL	
10-22	2.5YR 5/4	100					SiCL	

[1]Type: C=Concentration, D=Depletion, RM=Reduced Matrix, MS=Masked Sand Grains. [2]Location: PL=Pore Lining, M=Matrix.

Hydric Soil Indicators:

- ___ Histosol (A1)
- ___ Histic Epipedon (A2)
- ___ Black Histic (A3)
- ___ Hydrogen Sulfide (A4)
- ___ Stratified Layers (A5)
- ___ Depleted Below Dark Surface (A11)
- ___ Thick Dark Surface (A12)
- ___ Sandy Mucky Mineral (S1)
- ___ Sandy Gleyed Matrix (S4)
- ___ Sandy Redox (S5)
- ___ Stripped Matrix (S6)
- ___ Dark Surface (S7) **(LRR R, MLRA 149B)**
- ___ Polyvalue Below Surface (S8) **(LRR R, MLRA 149B)**
- ___ Thin Dark Surface (S9) **(LRR R, MLRA 149B)**
- ___ Loamy Mucky Mineral (F1) **(LRR K, L)**
- ___ Loamy Gleyed Matrix (F2)
- ___ Depleted Matrix (F3)
- ___ Redox Dark Surface (F6)
- ___ Depleted Dark Surface (F7)
- ___ Redox Depressions (F8)

Indicators for Problematic Hydric Soils[3]:

- ___ 2 cm Muck (A10) **(LRR K, L, MLRA 149B)**
- ___ Coast Prairie Redox (A16) **(LRR K, L, R)**
- ___ 5 cm Mucky Peat or Peat (S3) **(LRR K, L, R)**
- ___ Dark Surface (S7) **(LRR K, L, M)**
- ___ Polyvalue Below Surface (S8) **(LRR K, L)**
- ___ Thin Dark Surface (S9) **(LRR K, L)**
- ___ Iron-Manganese Masses (F12) **(LRR K, L, R)**
- ___ Piedmont Floodplain Soils (F19) **(MLRA 149B)**
- ___ Mesic Spodic (TA6) **(MLRA 144A, 145, 149B)**
- ___ Red Parent Material (F21)
- ___ Very Shallow Dark Surface (TF12)
- ___ Other (Explain in Remarks)

[3]Indicators of hydrophytic vegetation and wetland hydrology must be present, unless disturbed or problematic.

Restrictive Layer (if observed):

Type:_____

Depth (inches):_____

Hydric Soil Present? Yes _____ No X

Remarks:

WETLAND DETERMINATION DATA FORM – Northcentral and Northeast Region

Project/Site: Wild Oaks Water Supply City/County: Lewisboro/Westchester Sampling Date: 5/8/2014

Applicant/Owner: New York American Water State: NY Sampling Point: DP4

Investigator(s): Joe Buckley, Ross Diamond Section, Township, Range: Town of Lewisboro

Landform (hillslope, terrace, etc.): Floodplain terrace Local relief (concave, convex, none): None Slope (%): 0-3

Subregion (LRR or MLRA): LRR R Lat: 41°18'13.657"N Long: 73°39'14.196"W Datum: NAD83

Soil Map Unit Name: (FF) Fluvaquents-Udifluvents / (LeA) Leicester loam 0-3 NWI classification: PFO

Are climatic / hydrologic conditions on the site typical for this time of year? Yes _____ No X (If no, explain in Remarks.)

Are Vegetation _____, Soil _____, or Hydrology _____ significantly disturbed? Are "Normal Circumstances" present? Yes _____ No X

Are Vegetation _____, Soil _____, or Hydrology _____ naturally problematic? (If needed, explain any answers in Remarks.)

SUMMARY OF FINDINGS – Attach site map showing sampling point locations, transects, important features, etc.

Hydrophytic Vegetation Present?	Yes X	No
Hydric Soil Present?	Yes X	No
Wetland Hydrology Present?	Yes X	No

Is the Sampled Area within a Wetland? Yes X No

If yes, optional Wetland Site ID: Wetland B

Remarks: (Explain alternative procedures here or in a separate report.)

Significant precipitation was observed prior to and during the delineation.

HYDROLOGY

Wetland Hydrology Indicators:

Primary Indicators (minimum of one is required; check all that apply)

- X Surface Water (A1)
- X High Water Table (A2)
- X Saturation (A3)
- ___ Water Marks (B1)
- ___ Sediment Deposits (B2)
- ___ Drift Deposits (B3)
- ___ Algal Mat or Crust (B4)
- ___ Iron Deposits (B5)
- ___ Inundation Visible on Aerial Imagery (B7)
- ___ Sparsely Vegetated Concave Surface (B8)
- X Water-Stained Leaves (B9)
- ___ Aquatic Fauna (B13)
- ___ Marl Deposits (B15)
- ___ Hydrogen Sulfide Odor (C1)
- ___ Oxidized Rhizospheres on Living Roots (C3)
- ___ Presence of Reduced Iron (C4)
- ___ Recent Iron Reduction in Tilled Soils (C6)
- ___ Thin Muck Surface (C7)
- ___ Other (Explain in Remarks)

Secondary Indicators (minimum of two required)

- ___ Surface Soil Cracks (B6)
- ___ Drainage Patterns (B10)
- ___ Moss Trim Lines (B16)
- ___ Dry-Season Water Table (C2)
- ___ Crayfish Burrows (C8)
- ___ Saturation Visible on Aerial Imagery (C9)
- ___ Stunted or Stressed Plants (D1)
- ___ Geomorphic Position (D2)
- ___ Shallow Aquitard (D3)
- X Microtopographic Relief (D4)
- ___ FAC-Neutral Test (D5)

Field Observations:

Surface Water Present?	Yes X	No ___	Depth (inches): 0-2"
Water Table Present?	Yes X	No ___	Depth (inches): 6"
Saturation Present? (includes capillary fringe)	Yes X	No ___	Depth (inches): 3-4"

Wetland Hydrology Present? Yes X No

Describe Recorded Data (stream gauge, monitoring well, aerial photos, previous inspections), if available:

Remarks:

Minor surface water ponding may have been due to precipitation.

VEGETATION – Use scientific names of plants.

Sampling Point: DP4

Tree Stratum (Plot size: 30ft²)	Absolute % Cover	Dominant Species?	Indicator Status
1. Ulmus rubra	30	✓	FAC
2. Acer rubrum	60	✓	FAC
3. Ailanthus altissima	10		UPL
4.			
5.			
6.			
7.			
	100 = Total Cover		

Sapling/Shrub Stratum (Plot size: 15ft²)			
1. Elaeagnus umbellata	20	✓	NL
2.			
3.			
4.			
5.			
6.			
7.			
	20 = Total Cover		

Herb Stratum (Plot size: 5ft²)			
1. Symplocarpus foetidus	50	✓	OBL
2. Sarracenia purpurea	5		OBL
3.			
4.			
5.			
6.			
7.			
8.			
9.			
10.			
11.			
12.			
	55 = Total Cover		

Woody Vine Stratum (Plot size: 30ft²)			
1.			
2.			
3.			
4.			
	0 = Total Cover		

Dominance Test worksheet:

Number of Dominant Species That Are OBL, FACW, or FAC: 3 (A)

Total Number of Dominant Species Across All Strata: 4 (B)

Percent of Dominant Species That Are OBL, FACW, or FAC: 75% (A/B)

Prevalence Index worksheet:

Total % Cover of:		Multiply by:
OBL species	55	x 1 = 110
FACW species	0	x 2 = 0
FAC species	90	x 3 = 270
FACU species	0	x 4 = 0
UPL species	0	x 5 = 0
Column Totals:	145 (A)	380 (B)

Prevalence Index = B/A = 2.62

Hydrophytic Vegetation Indicators:

___ 1 - Rapid Test for Hydrophytic Vegetation

X 2 - Dominance Test is >50%

X 3 - Prevalence Index is ≤3.0[1]

___ 4 - Morphological Adaptations[1] (Provide supporting data in Remarks or on a separate sheet)

___ Problematic Hydrophytic Vegetation[1] (Explain)

[1]Indicators of hydric soil and wetland hydrology must be present, unless disturbed or problematic.

Definitions of Vegetation Strata:

Tree – Woody plants 3 in. (7.6 cm) or more in diameter at breast height (DBH), regardless of height.

Sapling/shrub – Woody plants less than 3 in. DBH and greater than or equal to 3.28 ft (1 m) tall.

Herb – All herbaceous (non-woody) plants, regardless of size, and woody plants less than 3.28 ft tall.

Woody vines – All woody vines greater than 3.28 ft in height.

Hydrophytic Vegetation Present? Yes X No

Remarks: (Include photo numbers here or on a separate sheet.)

Palustline Floodplain Forest

SOIL

Sampling Point: DP4

Profile Description: (Describe to the depth needed to document the indicator or confirm the absence of indicators.)

Depth (inches)	Matrix Color (moist)	Matrix %	Redox Features Color (moist)	Redox %	Type[1]	Loc[2]	Texture	Remarks
0-6	10YR 2/2	75	7YR 6/2	25	D	M	SiCL	
6+	10YR 5/4	100					SiCL	Stony

[1]Type: C=Concentration, D=Depletion, RM=Reduced Matrix, MS=Masked Sand Grains. [2]Location: PL=Pore Lining, M=Matrix.

Hydric Soil Indicators:

- ___ Histosol (A1)
- ___ Histic Epipedon (A2)
- ___ Black Histic (A3)
- ___ Hydrogen Sulfide (A4)
- ___ Stratified Layers (A5)
- ___ Depleted Below Dark Surface (A11)
- ___ Thick Dark Surface (A12)
- ___ Sandy Mucky Mineral (S1)
- ___ Sandy Gleyed Matrix (S4)
- ___ Sandy Redox (S5)
- ___ Stripped Matrix (S6)
- ___ Dark Surface (S7) **(LRR R, MLRA 149B)**
- ___ Polyvalue Below Surface (S8) **(LRR R, MLRA 149B)**
- ___ Thin Dark Surface (S9) **(LRR R, MLRA 149B)**
- ___ Loamy Mucky Mineral (F1) **(LRR K, L)**
- ___ Loamy Gleyed Matrix (F2)
- X Depleted Matrix (F3)
- ___ Redox Dark Surface (F6)
- ___ Depleted Dark Surface (F7)
- ___ Redox Depressions (F8)

Indicators for Problematic Hydric Soils[3]:

- ___ 2 cm Muck (A10) **(LRR K, L, MLRA 149B)**
- ___ Coast Prairie Redox (A16) **(LRR K, L, R)**
- ___ 5 cm Mucky Peat or Peat (S3) **(LRR K, L, R)**
- ___ Dark Surface (S7) **(LRR K, L, M)**
- ___ Polyvalue Below Surface (S8) **(LRR K, L)**
- ___ Thin Dark Surface (S9) **(LRR K, L)**
- ___ Iron-Manganese Masses (F12) **(LRR K, L, R)**
- ___ Piedmont Floodplain Soils (F19) **(MLRA 149B)**
- ___ Mesic Spodic (TA6) **(MLRA 144A, 145, 149B)**
- ___ Red Parent Material (F21)
- ___ Very Shallow Dark Surface (TF12)
- ___ Other (Explain in Remarks)

[3]Indicators of hydrophytic vegetation and wetland hydrology must be present, unless disturbed or problematic.

Restrictive Layer (if observed):

Type:_____

Depth (Inches):_____

Hydric Soil Present? Yes X No _____

Remarks:

Appendix F
Photograph Log

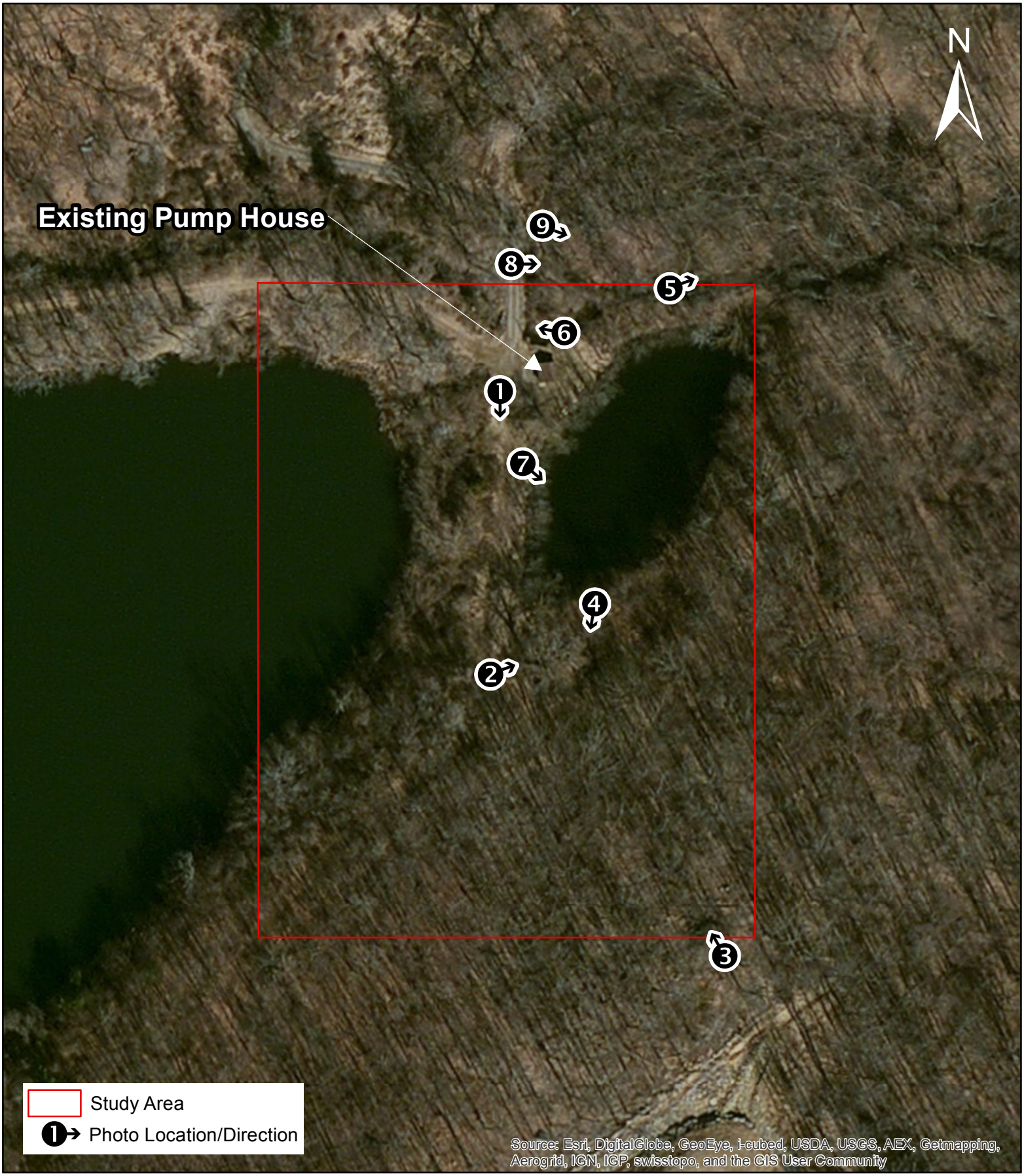

SCALE

0 50 100 150 200 Feet

Photograph Key

HAZEN AND SAWYER
Environmental Engineers & Scientists

Wild Oaks Water System
Wild Oaks Wetland Delineation

Photo 1
Southern facing, standing at pump house. Strip of land between two freshwater ponds.

Photo 2
Southern end of Wetland A. Facing east. Drainage channel in center and vehicle ruts in foreground.

Photo 3
Facing south. Drainage channel on uphill, northerly facing slope. South of study area.

Photo 4
Facing north, uphill slope. Confluence of drainage channel with disturbed access path and beginning of fringe in foreground. Purple wetland flags showing southerly boundary of Wetland A.

Photo 5
Facing east, upstream of unnamed stream.

Photo 6
Facing west, downstream of unnamed stream. Culverted section just north of pump house.

Photo 7
Facing east on smaller pond, from mowed strip. Fringe vegetation.

Photo 8
Facing east. Wetland B. Power line and dumping evident.

Photo 9

Facing north. Wetland B. Microtopographic relief evident. Depressions showing surface water and in drier conditions, water-stained leaves.

WILD OAKS WATER SYSTEM

Town of Lewisboro Site Development and Wetland Activity Permit Application for Well #4 and Well #6

Attachment 10

Short Environmental Assessment Form

617.20
Appendix B
Short Environmental Assessment Form

Instructions for Completing

Part 1 - Project Information. The applicant or project sponsor is responsible for the completion of Part 1. Responses become part of the application for approval or funding, are subject to public review, and may be subject to further verification. Complete Part 1 based on information currently available. If additional research or investigation would be needed to fully respond to any item, please answer as thoroughly as possible based on current information.

Complete all items in Part 1. You may also provide any additional information which you believe will be needed by or useful to the lead agency; attach additional pages as necessary to supplement any item.

Part 1 - Project and Sponsor Information

Name of Action or Project:
New York American Water - Wild Oaks Water System

Project Location (describe, and attach a location map):
Nash Road, Lewisboro, New York

Brief Description of Proposed Action:
Connect two drilled bedrock drinking wells, Well 4 and Well 6, to a pre-existing treatment house. See Project Description for additional detail.

Name of Applicant or Sponsor:	Telephone: ~~(516) 596-4860~~ (914) 835-2581
New York American Water	E-Mail: Richard.Ruge@amwater.com

Address:
260 Harrison Avenue

City/PO:	State:	Zip Code:
Harrison	NY	10528

	NO	YES
1. Does the proposed action only involve the legislative adoption of a plan, local law, ordinance, administrative rule, or regulation? If Yes, attach a narrative description of the intent of the proposed action and the environmental resources that may be affected in the municipality and proceed to Part 2. If no, continue to question 2.	☑	☐
2. Does the proposed action require a permit, approval or funding from any other governmental Agency? If Yes, list agency(s) name and permit or approval: Town of Lewisboro Wetland Permit; Westchester County Department of Health Well Site Permit	☐	☑

3.a. Total acreage of the site of the proposed action? 1.88 acres
b. Total acreage to be physically disturbed? <1 acres
c. Total acreage (project site and any contiguous properties) owned or controlled by the applicant or project sponsor? 1.88 acres

4. Check all land uses that occur on, adjoining and near the proposed action.
☐ Urban ☐ Rural (non-agriculture) ☐ Industrial ☐ Commercial ☑ Residential (suburban)
☑ Forest ☐ Agriculture ☑ Aquatic ☐ Other (specify): _____
☐ Parkland

	NO	YES	N/A
5. Is the proposed action,			
a. A permitted use under the zoning regulations?	☐	☐	☑
b. Consistent with the adopted comprehensive plan?	☐	☐	☑
6. Is the proposed action consistent with the predominant character of the existing built or natural landscape?	NO ☐	YES ☑	
7. Is the site of the proposed action located in, or does it adjoin, a state listed Critical Environmental Area? If Yes, identify: _____	NO ☑	YES ☐	
8. a. Will the proposed action result in a substantial increase in traffic above present levels?	NO ☑	YES ☐	
b. Are public transportation service(s) available at or near the site of the proposed action?	☑	☐	
c. Are any pedestrian accommodations or bicycle routes available on or near site of the proposed action?	☑	☐	
9. Does the proposed action meet or exceed the state energy code requirements? If the proposed action will exceed requirements, describe design features and technologies: N/A	NO ☐	YES ☐	
10. Will the proposed action connect to an existing public/private water supply? If No, describe method for providing potable water: _____	NO ☐	YES ☑	
11. Will the proposed action connect to existing wastewater utilities? If No, describe method for providing wastewater treatment: _____	NO ☑	YES ☐	
12. a. Does the site contain a structure that is listed on either the State or National Register of Historic Places?	NO ☑	YES ☐	
b. Is the proposed action located in an archeological sensitive area?	☐	☑	
13. a. Does any portion of the site of the proposed action, or lands adjoining the proposed action, contain wetlands or other waterbodies regulated by a federal, state or local agency?	NO ☐	YES ☑	
b. Would the proposed action physically alter, or encroach into, any existing wetland or waterbody? If Yes, identify the wetland or waterbody and extent of alterations in square feet or acres: Well locations are in Town of Lewisboro regulated wetland buffer area. Wetland buffer area to be temporarily disturbed is approximately 1,850 sq. ft.	☐	☑	
14. Identify the typical habitat types that occur on, or are likely to be found on the project site. Check all that apply: ☑ Shoreline ☑ Forest ☐ Agricultural/grasslands ☐ Early mid-successional ☑ Wetland ☐ Urban ☐ Suburban			
15. Does the site of the proposed action contain any species of animal, or associated habitats, listed by the State or Federal government as threatened or endangered?	NO ☑	YES ☐	
16. Is the project site located in the 100 year flood plain?	NO ☑	YES ☐	
17. Will the proposed action create storm water discharge, either from point or non-point sources? If Yes, a. Will storm water discharges flow to adjacent properties? ☑ NO ☐ YES	NO ☑	YES ☐	
b. Will storm water discharges be directed to established conveyance systems (runoff and storm drains)? ☑ NO ☐ YES If Yes, briefly describe: _____			

	NO	YES
18. Does the proposed action include construction or other activities that result in the impoundment of water or other liquids (e.g. retention pond, waste lagoon, dam)? If Yes, explain purpose and size: A small 5 ft x 5 ft collection pit may be dug next to the well to collect rock cuttings during drilling and prevent erosion. Pits will be backfilled once drilling is complete.	☐	☑
19. Has the site of the proposed action or an adjoining property been the location of an active or closed solid waste management facility? If Yes, describe:	☑	☐
20. Has the site of the proposed action or an adjoining property been the subject of remediation (ongoing or completed) for hazardous waste? If Yes, describe:	☑	☐

I AFFIRM THAT THE INFORMATION PROVIDED ABOVE IS TRUE AND ACCURATE TO THE BEST OF MY KNOWLEDGE

Applicant/sponsor name: Richard Ruge Date: 11/22/16

Signature: Richard Ruge

Part 2 - Impact Assessment. The Lead Agency is responsible for the completion of Part 2. Answer all of the following questions in Part 2 using the information contained in Part 1 and other materials submitted by the project sponsor or otherwise available to the reviewer. When answering the questions the reviewer should be guided by the concept "Have my responses been reasonable considering the scale and context of the proposed action?"

	No, or small impact may occur	Moderate to large impact may occur
1. Will the proposed action create a material conflict with an adopted land use plan or zoning regulations?	☐	☐
2. Will the proposed action result in a change in the use or intensity of use of land?	☐	☐
3. Will the proposed action impair the character or quality of the existing community?	☐	☐
4. Will the proposed action have an impact on the environmental characteristics that caused the establishment of a Critical Environmental Area (CEA)?	☐	☐
5. Will the proposed action result in an adverse change in the existing level of traffic or affect existing infrastructure for mass transit, biking or walkway?	☐	☐
6. Will the proposed action cause an increase in the use of energy and it fails to incorporate reasonably available energy conservation or renewable energy opportunities?	☐	☐
7. Will the proposed action impact existing: a. public / private water supplies?	☐	☐
b. public / private wastewater treatment utilities?	☐	☐
8. Will the proposed action impair the character or quality of important historic, archaeological, architectural or aesthetic resources?	☐	☐
9. Will the proposed action result in an adverse change to natural resources (e.g., wetlands, waterbodies, groundwater, air quality, flora and fauna)?	☐	☐

	No, or small impact may occur	Moderate to large impact may occur
10. Will the proposed action result in an increase in the potential for erosion, flooding or drainage problems?	☐	☐
11. Will the proposed action create a hazard to environmental resources or human health?	☐	☐

Part 3 - Determination of significance. The Lead Agency is responsible for the completion of Part 3. For every question in Part 2 that was answered "moderate to large impact may occur", or if there is a need to explain why a particular element of the proposed action may or will not result in a significant adverse environmental impact, please complete Part 3. Part 3 should, in sufficient detail, identify the impact, including any measures or design elements that have been included by the project sponsor to avoid or reduce impacts. Part 3 should also explain how the lead agency determined that the impact may or will not be significant. Each potential impact should be assessed considering its setting, probability of occurring, duration, irreversibility, geographic scope and magnitude. Also consider the potential for short-term, long-term and cumulative impacts.

☐ Check this box if you have determined, based on the information and analysis above, and any supporting documentation, that the proposed action may result in one or more potentially large or significant adverse impacts and an environmental impact statement is required.

☐ Check this box if you have determined, based on the information and analysis above, and any supporting documentation, that the proposed action will not result in any significant adverse environmental impacts.

Name of Lead Agency	Date
Print or Type Name of Responsible Officer in Lead Agency	Title of Responsible Officer
Signature of Responsible Officer in Lead Agency	Signature of Preparer (if different from Responsible Officer)

PRINT

WILD OAKS WATER SYSTEM

Town of Lewisboro Site Development and Wetland Activity Permit Application for Well #4 and Well #6

Attachment 11

Engineer's Report

NEW YORK
AMERICAN WATER

WILD OAKS GROUNDWATER WELL REPLACEMENT

Engineer's Report

May 2015
Revised August 2016

STATE OF NEW YORK
RICHARD EDWARD PETERS
No. 066186
LICENSED PROFESSIONAL ENGINEER

Hazen

Table of Contents

1.0 Introduction 1-1

1.1 Purpose of Report 1-1

1.2 Background 1-1

1.3 System Demands 1-2

2.0 Existing Water Supply System 2-2

2.1 Introduction 2-2

2.2 Existing System Configuration 2-3

2.3 Existing Groundwater Wells 2-3

2.4 Existing Water Treatment System 2-3

3.0 Proposed System Upgrades 3-4

3.1 Well Cap 3-4

3.2 Pump Selection 3-4

3.3 Piping Connection 3-4

3.4 Electrical 3-5

4.0 Appendices 4-5

Appendices

Hydraulic Calculations ..... Appendix A

Well Pump Cutsheets and Curves ..... Appendix B

1.0 Introduction

1.1 Purpose of Report

The purpose of this report is to present the basis of design for the construction of two new groundwater wells at the Wild Oaks Water System. The report provides a description of the existing water treatment system at the Wild Oaks well house, a description of the two new well pumps and proposed modifications to connect the two new wells to the existing water treatment system. The well construction plans were submitted under a previously approved submittal (Log No.: C14-021). This report is an update to the report dated May 2015, and has been revised to provide updated information on the additional well drilled and pumping equipment proposed for the two production wells.

1.2 Background

New York American Water (NYAW) currently owns and operates the Wild Oaks groundwater system in the Town of Lewisboro, Westchester County, New York. The existing water system is supplied by two sand and gravel wells, each permitted for 75 gpm. The existing wells (Well #1 and Well #2) are housed within a well house which also provides treatment: cartridge filtration, UV treatment and chemical addition (sodium hypochlorite and orthophosphate) of the groundwater prior to distribution. Well #1 cannot be used due to low production and poor water quality.

New York American Water is currently planning to replace the two shallow wells by drilling and developing two new bedrock wells at the Wild Oaks property (submitted under previously approved submittal (Log No.: C14-021). To date, three test wells have been drilled. Pump testing and water quality testing for wells #4 and #5 has been completed and was previously approved (Log No.: C15-018). Two wells (#4 and #5) were drilled initially; however, pump testing of Well #5 revealed that it would be unable to furnish the anticipated flow necessary to satisfy the design requirements (80 gpm) to be redundant to Well #4. As a result, a third well (#6) was drilled adjacent to Well #4. Approval for the construction of Well #6 was previously provided (Log No.: C14-031). Preliminary results of the 72-hour testing has indicated that Well #6 will be capable of producing the design flow of 80 gpm. The results of the Well #6 pump test and water quality report will be provided under a separate cover.

The scope of this project will include the following items:

- Completion of two bedrock wells (Well #4 and Well #6);
- Installation of buried pitless adapters and flood-proof well caps;
- Installation of two new submersible pumps;
- Decommissioning of Well #1
- Installation of new 4-inch diameter pipes from the new wells' discharge piping to the existing treatment system;
- Necessary electrical components to accommodate new pumps and motors.

The piping, pitless adapter and pump will not be installed for Well #5 and this well will not be placed into service.

The existing sand and gravel shallow wells are designated Groundwater Under the Direct Influence of Surface Water (GUDISW) due to their depth and proximity to surface waters. The existing water treatment system consists of two treatment trains (one duty and one standby). Each train consists of two cartridge filters in series (5 micron and 1 micron, respectively) UV disinfection, secondary disinfection (with sodium hypochlorite) and corrosion control (with orthophosphate). No changes are being proposed to the existing treatment system.

The new bedrock wells will draw groundwater from a significantly greater depth than the existing wells and from a different aquifer formation. The new source is expected to exhibit water quality improvement from the existing sand and gravel wells. After construction and once approved (under a separate submittal), the new bedrock wells #4 and #6 will be brought online and the water will be treated via the existing treatment system. Due to the depth of the new groundwater wells, future testing to determine if the new wells are under the direct influence of surface water may be performed. The new groundwater source will continue to undergo treatment, until a conclusion is made regarding its status as groundwater under direct influence of surface water. A subsequent sampling program and GWUDI study will be performed in the future and are not part of this submittal.

1.3 System Demands

The Wild Oaks system serves 610 customers through 223 service connections. Recent demand data for the Wild Oaks System is summarized below:

Table 1: Selected System Demand Data

Year	Average Day (gallons)	Average Day (gpm)	Maximum Day (gallons)	Maximum Day (gpm)
2010	16,098	11.2	86,300	59.9
2013	52,727	36.6	114,400	79.4
2014	43,200	30.0	89,080	61.9

The existing ground 125,000-gallon water storage tank provides water for peak demands and fire flow.

2.0 Existing Water Supply System

2.1 Introduction

This section discusses the existing wells, treatment system, and current operating conditions at the Wild Oaks well station. The review was developed through on-site

inspection of facilities and discussion with New York American Water personnel, including operating staff.

2.2 Existing System Configuration

The existing water supply system consists of two shallow 75 gpm groundwater wells, two-train water treatment system (duty, standby), an 8-inch treated water distribution main, the distribution network, and an existing 125,000 gallon storage tank. The well pumps are sized to provide a TDH of 334 feet at 75 gpm. The storage tank, which is located within the distribution network, is used as a balancing reservoir. A new 143,000 gallon storage tank is under construction adjacent to the existing storage tank located at the same hydraulic grade and is anticipated to be on-line in September 2016. After new tank is approved, the existing tank will be taken out of service, demolished and removed.

2.3 Existing Groundwater Wells

Each of the two existing sand and gravel wells (Wells #1 and #2) is permitted at 75 gpm by the New York State Department of Environmental Conservation (NYS DEC). The wells are located within the footprint of the well house structure. This supply is designated as groundwater under direct influence of surface water, and therefore requires treatment prior to distribution. See Section 2.4 for more details.

Wells #1 and #2 are currently equipped with 10 HP submersible pumps, which were installed in 2011 to accommodate the additional pressure required to operate the UV units which were also installed in 2011. The existing pumps are rated to deliver 75 gpm at a total dynamic head of 334 feet. Wells are duty-standby operation, such that only one well is in operation at a time. Well #1 cannot be used due to low production and poor water quality. Well #1 will be decommissioned as part of this project.

The Wild Oaks system also has a third existing well (Well #3) located near Nash Rd. Use of this well has been discontinued, and is not part of this project scope.

2.4 Existing Water Treatment System

The existing water treatment system is as described in the March 2011 Engineer's Report prepared by Dvirka and Bartilucci Consulting Engineers and as was approved by NYSDOH in 2011. Each of the two parallel trains includes the following:

- Two Cartridge filters (5μ and 1μ)
- Atlantium UV Reactor
- Sodium hypochlorite for secondary disinfection and chlorine residual
- Zinc Orthophosphate for corrosion control

There are no changes to the existing treatment system under this project.

3.0 Proposed System Upgrades

This section discusses the proposed facilities required for the replacement of the existing wells with the new bedrock wells. The scope of the improvements described in this report includes the well cap, well pump selection, raw water piping, connection to the existing water treatment system, electrical service, and instrumentation and controls. The well construction is described in the June 26, 2014 application to drill and construct two bedrock test wells. The application was approved by Westchester County DOH in a letter dated September 17, 2014 (Log No.: C14-021).

3.1 Well Cap

New wells #4 and #6 are not located within the FEMA 100-year floodplain. The 10 State Standards recommends that the top of the well casing terminate at least three feet above the known flood elevation. In accordance with these recommendations, the well cap shall be raised to an elevation 4 feet above grade, such that the well would be protected during a flood event. The ground surface around the well cap shall be sloped away from the well at a 1% slope to divert water away from the well.

3.2 Pump Selection

The new bedrock wells are significantly deeper than the existing sand and gravel wells and therefore will require larger horsepower pumps. Based on preliminary well testing results, both Well #4 and Well #6 are capable of producing up to 80 gpm. The new pumps will be sized to deliver these flow rates at 550 - 610 ft TDH. Calculations of the preliminary pump TDH are provided in Appendix A. The flow condition of 80 gpm satisfies the maximum day demand recorded in 2013 and presented in Table 1. Manufacturer's pump curves and product cut sheets are presented in Appendix B.

The well pumps will be submersible pumps fitted with variable speed drives. The pumps will be operated as one duty and one standby. The new well pumps will be controlled based on pump run time or water level in the storage tank.

3.3 Piping Connection

In each well, a pitless adapter unit shall be field welded to the inner diameter well casing to connect a horizontal 4-inch diameter ductile iron pipe. The horizontal pipe shall be buried at least four feet below grade, below the frost line. The discharge piping from Well #4 and Well#6 shall meet at a tee adjacent to the wells before running northward and entering the treatment building, as shown on the proposed site plan on Drawing C-1.

Gate valves shall be installed on each of the influent sides of the tee to allow isolated operation of each pump during maintenance.

Approximately 2 feet from entering the existing concrete block building, the pipe will rise to approximately 1 foot above grade before penetration of the existing well pump building wall. The elevation and alignment of the pipe above grade shall match the elevation of the existing pipe in the building where the connection is proposed.

The pipe shall be heat traced and insulated with polyurethane jacket from one foot from the inside of the building wall to a depth of four feet below grade. The heat tracing shall be wrapped with an aluminum jacket for weather protection. The ends of the aluminum jacket and wall penetration shall be capped and sealed to prevent water intrusion.

Inside the building, the proposed pipe shall be connected to the existing 3-inch cross joining at the location that Well #1 currently is located.. Ball valves and check valves shall be installed to isolate the new connection.

3.4 Electrical

Electrical service shall be provided to the two new well pumps. As previously mentioned, the preliminary well pumping test indicated similar productive yields from Well #4 and #6. As such, each well would be equipped with similar pump and motor sizes. Each well would require a new 20 hp motor. There are two spare breakers in the power distribution panel which shall be dedicated to the proposed pumps. Each motor shall be provided with a new starter, wall mounted inside the chemical building. NEMA 4X disconnect switches shall be installed outdoors, adjacent to the pumps at an elevation at least 3 feet above the maximum recorded flood level.

4.0 Appendices

Appendix A:
Pump TDH Calculations

Appendix B:
Manufacturer's Pump Curve and Product Data (see attachments)

- Well #4 and Well #6: Grundfos 85S200

Appendix A

Hydraulic Calculations

HAZEN AND SAWYER
ENVIRONMENTAL ENGINEERS & SCIENTISTS

Project: Wild Oaks Wells - Well 4
Well Headloss Calculations - Filters at 2.5psi

Project No.
Compiled by: Kristen Barrett
Checked by
Pumping Water Level: -320.00
Finish Elevation: 4.00
Task No.
Date: June 2015 Checked
Date

Total Friction Losses: 251.58
Elevation Losses: 324.00
Total Dynamic Headloss: 575.58

Flow: 80 gpm 0.12 mgd

		Hazen Williams C- Factor (future)	110															
			Q mgd	Diam. inch	Area ft^2	Hydraulic Radius ft	V fps	V^2/2g ft	Diam (2) inch	Area (2) ft^2	V (2) fps	(V1^2-V2^2)/2g ft	k	n	h(f)/1000L	L ft	Friction HL ft	Fitting HL ft	Cum HL ft	Notes
		Fittings																		
1		Reducer (20 degree angle)	0.12	3	0.05	0.06	3.6	0.20	4	0.09	2.0	0.14	0.39		27.66			0.05	0.05	
2		Pump															0.75	0.00	0.00	0 psi differential Per NYAW operators - 10 psi triggers cartridge replacement
3		Straight Pipe	0.12	3	0.05	0.06	3.6								27.66	324	8.96		9.77	
4		90°Elbow (Regular radius)	0.12	4	0.09	0.08	2.0	0.06					0.30		6.81			0.02	9.78	
5		Gate Valve	0.12	4	0.09	0.08	2.0	0.06					0.17		6.81			0.01	9.80	
6	Pasning Tee (Out Flowing) (Qr/Q=1.0)		0.12	4	0.09	0.08	2.0	0.06					0.40		6.81			0.03	9.82	
7		Straight Pipe	0.12	4	0.09	0.08	2.0								6.81	380	2.59		12.41	
8		90°Elbow (Regular radius)	0.12	4	0.09	0.08	2.0	0.06					0.30		6.81			0.02	12.43	
9		90°Elbow (Regular radius)	0.12	4	0.09	0.08	2.0	0.06					0.30		6.81			0.02	12.45	
10		Reducer (20 degree angle)	0.12	3	0.05	0.06	3.6	0.20	4	0.09	2.0	0.14	0.39		27.66			0.05	12.50	
11		90°Elbow (Regular radius)	0.12	3	0.05	0.06	3.6	0.20					0.30		27.66			0.06	12.57	
Enter Station			0.12																12.57	
12		Check Valve	0.12	3	0.05	0.06	3.6	0.20					0.40		27.66			0.08	12.65	
13		Gate Valve	0.12	3	0.05	0.06	3.6	0.20					0.40		27.66			0.08	12.73	
14		Straight Pipe	0.12	3	0.05	0.06	3.6								27.66	1.5	0.04		12.77	
15		Cross	0.12	3	0.05	0.06	3.6	0.20					0.30		27.66			0.06	12.83	
16		Reducer (20 degree angle)	0.12	2	0.02	0.04	8.2	1.04	3	0.05	3.6	0.83	0.39		199.23			0.32	13.16	
17		Tee	0.12	2	0.02	0.04	8.2	1.04					0.30		199.23			0.31	13.47	
18		Gate Valve	0.12	2	0.02	0.04	8.2	1.04					0.40		199.23			0.41	13.88	
19		Straight Pipe	0.12	2	0.02	0.04	8.2								199.23	2	0.40		14.28	
20		90°Elbow (Regular radius)	0.12	2	0.02	0.04	8.2	1.04					0.30		199.23			0.31	14.59	
21		Straight Pipe	0.12	2	0.02	0.04	8.2								199.23	1	0.20		14.79	
22		90°Elbow (Regular radius)	0.12	2	0.02	0.04	8.2	1.04					0.30		199.23			0.31	15.10	
23		Straight Pipe	0.12	2	0.02	0.04	8.2								199.23	0.8	0.16		15.26	
24		Inlet Losses	0.12	2	0.02	0.04	8.2	1.04					1.00		199.23			1.04	16.30	
25		Filter	0.12	2	0.02	0.04	8.2		10	0.55	0.3						5.78	0.00	22.08	2.5 psi differential Per NYAW operators - 10 psi triggers cartridge replacement
26		Outlet Losses	0.12	2	0.02	0.04	8.2	1.04					0.20		199.23			0.21	22.28	2.5 Clean - 1 micron - Harmsco HUR 90 - at 80 gpm
27		Straight Pipe	0.12	2	0.02	0.04	8.2								199.23	1	0.20		22.48	0 dirty
28		90°Elbow (Regular radius)	0.12	2	0.02	0.04	8.2	1.04					0.30		199.23			0.31	22.79	
29		Straight Pipe	0.12	2	0.02	0.04	8.2								199.23	1.3	0.26		23.05	
30		90°Elbow (Regular radius)	0.12	2	0.02	0.04	8.2	1.04					0.30		199.23			0.31	23.36	
31		Straight Pipe	0.12	2	0.02	0.04	8.2								199.23	1	0.20		23.56	
32		90°Elbow (Regular radius)	0.12	2	0.02	0.04	8.2	1.04					0.30		199.23			0.31	23.87	
33		Straight Pipe	0.12	2	0.02	0.04	8.2								199.23	0.5	0.10		23.97	
34		Inlet Losses	0.12	2	0.02	0.04	8.2	1.04					1.00		199.23			1.04	25.01	
35		Filter	0.12	2	0.02	0.04	8.2		10	0.55	0.3						5.78	0.00	30.79	2.5 psi differential Per NYAW operators - 10 psi triggers cartridge replacement
36		Outlet Losses	0.12	2	0.02	0.04	8.2	1.04					0.20		199.23			0.21	30.99	2.5 Clean - 1 micron - Harmsco HUR 90 - at 80 gpm
37		Straight Pipe	0.12	2	0.02	0.04	8.2								199.23	1	0.20		31.19	0 dirty
38		90°Elbow (Regular radius)	0.12	2	0.02	0.04	8.2	1.04					0.30		199.23			0.31	31.50	
39		Straight Pipe	0.12	4	0.09	0.08	2.0								6.81	1.3	0.01		31.51	
40		Reducer (20 degree angle)	0.12	2	0.02	0.04	8.2	1.04	4	0.09	2.0	0.97	0.39		199.23			0.38	31.89	
41		Gate Valve	0.12	4	0.09	0.08	2.0	0.06					0.40		6.81			0.03	31.92	
42		Straight Pipe	0.12	4	0.09	0.08	2.0								6.81	3.3	0.02		31.94	
43		UV	0.12															2.30	34.24	
44		Straight Pipe	0.12	4	0.09	0.08	2.0								6.81	0.8	0.01		34.25	
45		Gate Valve	0.12	4	0.09	0.08	2.0	0.06					0.40		6.81			0.03	34.27	
46		Vacuum Breaker	0.12	4	0.09	0.08	2.0	0.06					0.15		6.81			0.01	34.28	
47		Reducer (20 degree angle)	0.12	2	0.02	0.04	8.2	1.04	4	0.09	2.0	0.97	0.39		199.23			0.38	34.66	
48		Gate Valve	0.12	2	0.02	0.04	8.2	1.04					0.40		199.23			0.41	35.08	
49		Straight Pipe	0.12	2	0.02	0.04	8.2								199.23	6.5	1.30		36.37	
50		90°Elbow (Regular radius)	0.12	2	0.02	0.04	8.2	1.04					0.30		199.23			0.31	36.68	
51		Straight Pipe	0.12	2	0.02	0.04	8.2								199.23	4.7	0.94		37.62	
52		Tee	0.12	2	0.02	0.04	8.2	1.04					0.30		199.23			0.31	37.93	
53		Straight Pipe	0.12	2	0.02	0.04	8.2								199.23	1.5	0.30		38.23	
54		Flow Control Valve	0.12	2	0.02	0.04	8.2	1.04					0.15		199.23			5.00	43.23	
55		Reducer (20 degree angle)	0.12	2	0.02	0.04	8.2	1.04	4	0.09	2.0	0.97	0.39		199.23			0.38	43.61	
56		Straight Pipe	0.12	4	0.09	0.08	2.0								6.81	0.5	0.00		43.61	
57		90°Elbow (Regular radius)	0.12	4	0.09	0.08	2.0	0.06					0.30		6.81			0.02	43.63	
58		Gate Valve	0.12	4	0.09	0.08	2.0	0.06					0.40		6.81			0.03	43.66	
59		Reducer (20 degree angle)	0.12	4	0.09	0.08	2.0	0.06	8	0.35	0.5	0.06	0.39		6.81			0.02	43.68	
60		Straight Pipe	0.12	8	0.35	0.17	0.5								0.23	2	0.00		43.68	
61		90°Elbow (Regular radius)	0.12	8	0.35	0.17	0.5	0.00					0.30		0.23			0.00	43.68	
62		Pressure After UV	0.12														207.90	0.00	251.58	90 psi on discharge
																			251.58	

A - HL pump, piping, meterter = 251.6
B - Elevation Change = 324.0

TDH = A + B 575.58

Design Criteria -
Pumping Water Level = 320 feet below grade - LBG 72 hour pump test results for Pump #4
Pressure Differential of Cartridge Filters (Dirty) = 10 psi
Pressures required to feed the system (pressure gauge on discharge of UV before leaving plant) at 80 gpm = 90 psi

HAZEN AND SAWYER
ENVIRONMENTAL ENGINEERS & SCIENTISTS

Project: Wild Oaks Wells - Well 4
Well Headloss Calculations - Filtery at 10 psi

Project No.
Compiled by: Kristen Berrett
Checked by
Pumping Water Level: -320.00
Finish Elevation: 4.00
Task No.
Date: June 2015 Checked
Date

Total Friction Losses: 285.61
Elevation Losses: 324.00
Total Dynamic Headloss: 609.61

Flow: 80 gpm 0.12 mgd

		Hazen Williams C- Factor (Remote)	110																
			Q mgd	Diam. inch	Area ft^2	Hydraulic Radius ft	V fps	V^2 /2g ft	Diam (2) inch	Area (2) ft^2	V (2) fps	(V1^2-V2^2)/2g ft	k	n	h(f)/100ft.	L ft	Friction HL ft	Fitting HL ft	Cum HL ft	Notes
		Fittings																		
1		Reducer (20 degree angle)	0.12	3	0.05	0.06	3.6	0.20	4	0.09	2.0	0.14	0.39		27.66			0.05	8.85	
2		Pump															8.75	0.00	8.80	9 psi differential Per NYAW operators - 10 psi triggers cartridge replacement
3		Straight Pipe	0.12	3	0.05	0.06	3.6								27.66	324	8.96		9.77	
4		90°Elbow (Regular radius)	0.12	4	0.09	0.08	2.0	0.06					0.30		6.81			0.02	9.78	
5		Gate Valve	0.12	4	0.09	0.08	2.0	0.06					0.17		6.81			0.01	9.80	
6		Passing Tee (Out Flowing) (Qr/Q=1.0)	0.12	4	0.09	0.08	2.0	0.06					0.40		6.81			0.03	9.82	
7		Straight Pipe	0.12	4	0.09	0.08	2.0								6.81	380	2.59		12.41	
8		90°Elbow (Regular radius)	0.12	4	0.09	0.08	2.0	0.06					0.30		6.81			0.02	12.43	
9		90°Elbow (Regular radius)	0.12	4	0.09	0.08	2.0	0.06					0.30		6.81			0.02	12.45	
10		Reducer (20 degree angle)	0.12	3	0.05	0.06	3.6	0.20	4	0.09	2.0	0.14	0.39		27.66			0.05	12.50	
11		90°Elbow (Regular radius)	0.12	3	0.05	0.06	3.6	0.20					0.30		27.66			0.06	12.57	
Enter Station			0.12																12.57	
12		Check Valve	0.12	3	0.05	0.06	3.6	0.20					0.40		27.66			0.08	12.65	
13		Gate Valve	0.12	3	0.05	0.06	3.6	0.20					0.15		27.66			0.03	12.68	
14		Straight Pipe	0.12	3	0.05	0.06	3.6								27.66	1.5	0.04		12.72	
15		Cross	0.12	3	0.05	0.06	3.6	0.20					0.30		27.66			0.06	12.78	
16		Reducer (20 degree angle)	0.12	2	0.02	0.04	8.2	1.04	3	0.05	3.6	0.83	0.39		199.23			0.32	13.11	
17		Tee	0.12	2	0.02	0.04	8.2	1.04					0.30		199.23			0.31	13.42	
18		Ball Valve	0.12	2	0.02	0.04	8.2	1.04					0.15		199.23			0.16	13.57	
19		Straight Pipe	0.12	2	0.02	0.04	8.2								199.23	2	0.40		13.97	
20		90°Elbow (Regular radius)	0.12	2	0.02	0.04	8.2	1.04					0.30		199.23			0.31	14.28	
21		Straight Pipe	0.12	2	0.02	0.04	8.2								199.23	1	0.20		14.48	
22		90°Elbow (Regular radius)	0.12	2	0.02	0.04	8.2	1.04					0.30		199.23			0.31	14.79	
23		Straight Pipe	0.12	2	0.02	0.04	8.2								199.23	0.8	0.16		14.95	
24		Inlet Losses	0.12	2	0.02	0.04	8.2	1.04					1.00		199.23			1.04	15.99	
25		Filter	0.12	2	0.02	0.04	8.2		10	0.55	0.3						23.10	0.00	39.09	10 psi differential Per NYAW operators - 10 psi triggers cartridge replacement
26		Outlet Losses	0.12	2	0.02	0.04	8.2	1.04					0.20		199.23			0.21	39.30	2.5 Clean - 1 minute - Hazmaxx HLR 90 - at 80 gpm
27		Straight Pipe	0.12	2	0.02	0.04	8.2								199.23	1	0.20		39.50	7.5 dirty
28		90°Elbow (Regular radius)	0.12	2	0.02	0.04	8.2	1.04					0.30		199.23			0.31	39.81	
29		Straight Pipe	0.12	2	0.02	0.04	8.2								199.23	1.3	0.26		40.07	
30		90°Elbow (Regular radius)	0.12	2	0.02	0.04	8.2	1.04					0.30		199.23			0.31	40.38	
31		Straight Pipe	0.12	2	0.02	0.04	8.2								199.23	1	0.20		40.58	
32		90°Elbow (Regular radius)	0.12	2	0.02	0.04	8.2	1.04					0.30		199.23			0.31	40.89	
33		Straight Pipe	0.12	2	0.02	0.04	8.2								199.23	0.5	0.10		40.99	
34		Inlet Losses	0.12	2	0.02	0.04	8.2	1.04					1.00		199.23			1.04	42.03	
35		Filter	0.12	2	0.02	0.04	8.2		10	0.55	0.3						23.10	0.00	65.13	10 psi differential Per NYAW operators - 10 psi triggers cartridge replacement
36		Outlet Losses	0.12	2	0.02	0.04	8.2	1.04					0.20		199.23			0.21	65.33	2.5 Clean - 1 minute - Hazmaxx HLR 90 - at 80 gpm
37		Straight Pipe	0.12	2	0.02	0.04	8.2								199.23	1	0.20		65.53	7.5 dirty
38		90°Elbow (Regular radius)	0.12	2	0.02	0.04	8.2	1.04					0.30		199.23			0.31	65.84	
39		Straight Pipe	0.12	4	0.09	0.08	2.0								6.81	1.3	0.01		65.85	
40		Reducer (20 degree angle)	0.12	2	0.02	0.04	8.2	1.04	4	0.09	2.0	0.97	0.39		199.23			0.38	66.23	
41		Ball Valve	0.12	4	0.09	0.08	2.0	0.06					0.15		6.81			0.01	66.24	
42		Straight Pipe	0.12	4	0.09	0.08	2.0								6.81	3.3	0.02		66.26	
43		UV	0.12															2.30	68.56	
44		Straight Pipe	0.12	4	0.09	0.08	2.0								6.81	0.8	0.01		68.57	
45		Gate Valve	0.12	4	0.09	0.08	2.0	0.06					0.15		6.81			0.01	68.58	
46		Vacuum Breaker	0.12	4	0.09	0.08	2.0	0.06					0.15		6.81			0.01	68.59	
47		Reducer (20 degree angle)	0.12	2	0.02	0.04	8.2	1.04	4	0.09	2.0	0.97	0.39		199.23			0.38	68.97	
48		Gate Valve	0.12	2	0.02	0.04	8.2	1.04					0.15		199.23			0.16	69.12	
49		Straight Pipe	0.12	2	0.02	0.04	8.2								199.23	6.5	1.30		70.42	
50		90°Elbow (Regular radius)	0.12	2	0.02	0.04	8.2	1.04					0.30		199.23			0.31	70.73	
51		Straight Pipe	0.12	2	0.02	0.04	8.2								199.23	4.7	0.94		71.67	
52		Tee	0.12	2	0.02	0.04	8.2	1.04					0.30		199.23			0.31	71.98	
53		Straight Pipe	0.12	2	0.02	0.04	8.2								199.23	1.5	0.30		72.28	
54		Flow Control Valve	0.12	2	0.02	0.04	8.2	1.04					0.15		199.23			5.00	77.28	
55		Reducer (20 degree angle)	0.12	2	0.02	0.04	8.2	1.04	4	0.09	2.0	0.97	0.39		199.23			0.38	77.66	
56		Straight Pipe	0.12	4	0.09	0.08	2.0								6.81	0.5	0.00		77.66	
57		90°Elbow (Regular radius)	0.12	4	0.09	0.08	2.0	0.06					0.30		6.81			0.02	77.68	
58		Gate Valve	0.12	4	0.09	0.08	2.0	0.06					0.15		6.81			0.01	77.69	
59		Reducer (20 degree angle)	0.12	4	0.09	0.08	2.0	0.06	8	0.35	0.5	0.06	0.39		6.81			0.02	77.71	
60		Straight Pipe	0.12	8	0.35	0.17	0.5								0.23	2	0.00		77.71	
61		90°Elbow (Regular radius)	0.12	8	0.35	0.17	0.5	0.00					0.30		0.23			0.00	77.71	
62		Pressure After UV	0.12														207.90	0.00	285.61	90 psi on discharge
																			285.61	

A - HL pump, piping, saturator = 285.6
B - Elevation Change = 324.0

TDH = A + B 609.61

Design Criteria -
Pumping Water Level = 320 feet below grade - LBG 72 hour pump test results for Pump #4
Pressure Differential of Cartridge Filters (Dirty) = 10 psi
Pressures required to feed the system (pressure gauge on discharge of UV before leaving plant) at 80 gpm = 90 psi

HAZEN AND SAWYER
ENVIRONMENTAL ENGINEERS & SCIENTISTS

Project: Wild Oaks Wells - Well 6
Well Headloss Calculations - Filters at 2.5psi

Project No.
Compiled by: Kristen Berrett
Checked by
Pumping Water Level: -260.00 Finish Elevation: 4.00

Task No.
Date: July 2016 Checked
Date

Total Friction Losses: 251.58
Elevation Losses: 264.00
Total Dynamic Headloss: 515.58

Flow: 80 gpm 0.12 mgd

Hazen Williams C- Factor (future)		110 Q mgd	Diam. inch	Area ft^2	Hydraulic Radius ft	V fps	V^2 /2g ft	Diam (2) inch	Area (2) ft^2	V (2) fps	(V1^2-V2^2)/2g ft	k	n	h(ft)/100GL	L ft	Friction HL ft	Fitting HL ft	Cum HL ft	Notes
Fittings																			
1 Reducer (20 degree angle)		0.12	3	0.05	0.06	3.6	0.20	4	0.09	2.0	0.14	0.39		27.66			0.05	0.05	
2 Pump																0.75	0.00	0.80	
3 Straight Pipe		0.12	3	0.05	0.06	3.6								27.66	334	0.96		9.77	
4 90°Elbow (Regular radius)		0.12	4	0.09	0.08	2.0	0.06					0.30		6.81			0.02	9.78	
5 Gate Valve		0.12	4	0.09	0.08	2.0	0.06					0.17		6.81			0.01	9.80	
6 Passing Tee (Out Flowing) (Qr/Q=1.0)	1.00	0.12	4	0.09	0.08	2.0	0.06					0.40		6.81			0.03	9.82	
7 Straight Pipe		0.12	4	0.09	0.08	2.0								6.81	380	2.59		12.41	
8 90°Elbow (Regular radius)		0.12	4	0.09	0.08	2.0	0.06					0.30		6.81			0.02	12.43	
9 90°Elbow (Regular radius)		0.12	4	0.09	0.08	2.0	0.06					0.30		6.81			0.02	12.45	
10 Reducer (20 degree angle)		0.12	3	0.05	0.06	3.6	0.20	4	0.09	2.0	0.14	0.39		27.66			0.05	12.50	
11 90°Elbow (Regular radius)		0.12	3	0.05	0.06	3.6	0.20					0.30		27.66			0.06	12.57	
Enter Station		0.12																12.57	
12 Check Valve		0.12	3	0.05	0.06	3.6	0.20					0.40		27.66			0.08	12.65	
13 Gate Valve		0.12	3	0.05	0.06	3.6	0.20					0.40		27.66			0.08	12.73	
14 Straight Pipe		0.12	3	0.05	0.06	3.6								27.66	1.5	0.04		12.77	
15 Cross		0.12	3	0.05	0.06	3.6	0.20					0.30		27.66			0.06	12.83	
16 Reducer (20 degree angle)		0.12	2	0.02	0.04	8.2	1.04	3	0.05	3.6	0.83	0.39		199.23			0.32	13.16	
17 Tee		0.12	2	0.02	0.04	8.2	1.04					0.30		199.23			0.31	13.47	
18 Gate Valve		0.12	2	0.02	0.04	8.2	1.04					0.40		199.23			0.41	13.88	
19 Straight Pipe		0.12	2	0.02	0.04	8.2								199.23	2	0.40		14.28	
20 90°Elbow (Regular radius)		0.12	2	0.02	0.04	8.2	1.04					0.30		199.23			0.31	14.59	
21 Straight Pipe		0.12	2	0.02	0.04	8.2								199.23	1	0.20		14.79	
22 90°Elbow (Regular radius)		0.12	2	0.02	0.04	8.2	1.04					0.30		199.23			0.31	15.10	
23 Straight Pipe		0.12	2	0.02	0.04	8.2								199.23	0.8	0.16		15.26	
24 Inlet Losses		0.12	2	0.02	0.04	8.2	1.04					1.00		199.23			1.04	16.30	
25 Filter		0.12	2	0.02	0.04	8.2		10	0.55	0.3						5.78	0.00	22.08	2.5 psi differential Per NYAW operators - 10 psi triggers cartridge replacement
26 Outlet Losses		0.12	2	0.02	0.04	8.2	1.04					0.20		199.23			0.21	22.28	2.5 Clean - 1 micron - Harmsco HUR 90 - at 80 gpm
27 Straight Pipe		0.12	2	0.02	0.04	8.2								199.23	1	0.20		22.48	0 dirty
28 90°Elbow (Regular radius)		0.12	2	0.02	0.04	8.2	1.04					0.30		199.23			0.31	22.79	
29 Straight Pipe		0.12	2	0.02	0.04	8.2								199.23	1.3	0.26		23.05	
30 90°Elbow (Regular radius)		0.12	2	0.02	0.04	8.2	1.04					0.30		199.23			0.31	23.36	
31 Straight Pipe		0.12	2	0.02	0.04	8.2								199.23	1	0.20		23.56	
32 90°Elbow (Regular radius)		0.12	2	0.02	0.04	8.2	1.04					0.30		199.23			0.31	23.87	
33 Straight Pipe		0.12	2	0.02	0.04	8.2								199.23	0.5	0.10		23.97	
34 Inlet Losses		0.12	2	0.02	0.04	8.2	1.04					1.00		199.23			1.04	25.01	
35 Filter		0.12	2	0.02	0.04	8.2		10	0.55	0.3						5.78	0.00	30.79	2.5 psi differential Per NYAW operators - 10 psi triggers cartridge replacement
36 Outlet Losses		0.12	2	0.02	0.04	8.2	1.04					0.20		199.23			0.21	30.99	2.5 Clean - 1 micron - Harmsco HUR 90 - at 80 gpm
37 Straight Pipe		0.12	2	0.02	0.04	8.2								199.23	1	0.20		31.19	0 dirty
38 90°Elbow (Regular radius)		0.12	2	0.02	0.04	8.2	1.04					0.30		199.23			0.31	31.50	
39 Straight Pipe		0.12	4	0.09	0.08	2.0								6.81	1.3	0.01		31.51	
40 Reducer (20 degree angle)		0.12	2	0.02	0.04	8.2	1.04	4	0.09	2.0	0.97	0.39		199.23			0.38	31.89	
41 Gate Valve		0.12	4	0.09	0.08	2.0	0.06					0.40		6.81			0.03	31.92	
42 Straight Pipe		0.12	4	0.09	0.08	2.0								6.81	3.3	0.02		31.94	
43 UV		0.12															2.30	34.24	
44 Straight Pipe		0.12	4	0.09	0.08	2.0								6.81	0.8	0.01		34.25	
45 Gate Valve		0.12	4	0.09	0.08	2.0	0.06					0.40		6.81			0.03	34.27	
46 Vacuum Breaker		0.12	4	0.09	0.08	2.0	0.06					0.15		6.81			0.01	34.28	
47 Reducer (20 degree angle)		0.12	2	0.02	0.04	8.2	1.04	4	0.09	2.0	0.97	0.39		199.23			0.38	34.66	
48 Gate Valve		0.12	2	0.02	0.04	8.2	1.04					0.40		199.23			0.41	35.08	
49 Straight Pipe		0.12	2	0.02	0.04	8.2								199.23	6.5	1.30		36.37	
50 90°Elbow (Regular radius)		0.12	2	0.02	0.04	8.2	1.04					0.30		199.23			0.31	36.68	
51 Straight Pipe		0.12	2	0.02	0.04	8.2								199.23	4.7	0.94		37.62	
52 Tee		0.12	2	0.02	0.04	8.2	1.04					0.30		199.23			0.31	37.93	
53 Straight Pipe		0.12	2	0.02	0.04	8.2								199.23	1.5	0.30		38.23	
54 Flow Control Valve		0.12	2	0.02	0.04	8.2	1.04					0.15		199.23			5.00	43.23	
55 Reducer (20 degree angle)		0.12	2	0.02	0.04	8.2	1.04	4	0.09	2.0	0.97	0.39		199.23			0.38	43.61	
56 Straight Pipe		0.12	4	0.09	0.08	2.0								6.81	0.5	0.00		43.61	
57 90°Elbow (Regular radius)		0.12	4	0.09	0.08	2.0	0.06					0.30		6.81			0.02	43.63	
58 Gate Valve		0.12	4	0.09	0.08	2.0	0.06					0.40		6.81			0.03	43.66	
59 Reducer (20 degree angle)		0.12	4	0.09	0.08	2.0	0.06	8	0.35	0.5	0.06	0.39		6.81			0.02	43.68	
60 Straight Pipe		0.12	8	0.35	0.17	0.5								0.23	2	0.00		43.68	
61 90°Elbow (Regular radius)		0.12	8	0.35	0.17	0.5	0.00					0.30		0.23			0.00	43.68	
62 Pressure After UV		0.12														207.90	0.00	251.58	90 psi on discharge
																		251.58	

A - HL pump, piping, saturator = 251.6
B - Elevation Change = 264.0

TDH = A + B 515.58

Design Criteria -
Pumping Water Level = 220 feet below grade - LBG 72 hour pump test results for Pump #4
Pressure Differential of Cartridge Filters (Dirty) = 10 psi
Pressure required to feed the system (pressure gauge on discharge of UV before leaving plant) at 80 gpm = 90 psi

HAZEN AND SAWYER
ENVIRONMENTAL ENGINEERS & SCIENTISTS

Project: Wild Oaks Wells - Well 6
Well Headloss Calculations - Filters at 10 psi

Project No.
Compiled by: Kristen Barrett
Checked by
Pumping Water Level: -260.00
Finish Elevation: 4.00

Task No.
Date: July 2016
Checked
Date

Total Friction Losses: 285.61
Elevation Losses: 264.00
Total Dynamic Headloss: 549.61

Flow: 80 gpm 0.12 mgd

Hazen Williams C- Factor (future): 110

		Q mgd	Diam. inch	Area ft^2	Hydraulic Radius ft	V fps	V^2 /2g ft	Dmin (2) inch	Area (2) ft^2	V (2) fps	(V1^2-V2^2)/2g ft	k	n	h(l)/1000L	L ft	Friction HL ft	Fitting HL ft	Cum HL ft	Notes
Fittings																			
1 Reducer (20 degree angle)		0.12	3	0.05	0.06	3.6	0.20	4	0.09	2.0	0.14	0.39		27.66			0.05	0.85	
2 Pump																0.75	0.00	0.80	
3 Straight Pipe		0.12	3	0.05	0.06	3.6								27.66	324	8.96		9.77	
4 90°Elbow (Regular radius)		0.12	4	0.09	0.08	2.0	0.06					0.30		6.81			0.02	9.78	
5 Gate Valve		0.12	4	0.09	0.08	2.0	0.06					0.17		6.81			0.01	9.80	
6 Passing Tee (Out Flowing) (Qr/Q=1.0)	1.00	0.12	4	0.09	0.08	2.0	0.06					0.40		6.81			0.03	9.82	
7 Straight Pipe		0.12	4	0.09	0.08	2.0								6.81	380	2.59		12.41	
8 90°Elbow (Regular radius)		0.12	4	0.09	0.08	2.0	0.06					0.30		6.81			0.02	12.43	
9 90°Elbow (Regular radius)		0.12	4	0.09	0.08	2.0	0.06					0.30		6.81			0.02	12.45	
10 Reducer (20 degree angle)		0.12	3	0.05	0.06	3.6	0.20	4	0.09	2.0	0.14	0.39		27.66			0.05	12.50	
11 90°Elbow (Regular radius)		0.12	3	0.05	0.06	3.6	0.20					0.30		27.66			0.06	12.57	
Enter Station		0.12																12.57	
12 Check Valve		0.12	3	0.05	0.06	3.6	0.20					0.40		27.66			0.08	12.65	
13 Gate Valve		0.12	3	0.05	0.06	3.6	0.20					0.15		27.66			0.03	12.68	
14 Straight Pipe		0.12	3	0.05	0.06	3.6								27.66	1.5	0.04		12.72	
15 Cross		0.12	3	0.05	0.06	3.6	0.20					0.30		27.66			0.06	12.78	
16 Reducer (20 degree angle)		0.12	2	0.02	0.04	8.2	1.04	3	0.05	3.6	0.83	0.39		199.23			0.32	13.11	
17 Tee		0.12	2	0.02	0.04	8.2	1.04					0.30		199.23			0.31	13.42	
18 Ball Valve		0.12	2	0.02	0.04	8.2	1.04					0.15		199.23			0.16	13.57	
19 Straight Pipe		0.12	2	0.02	0.04	8.2								199.23	2	0.40		13.97	
20 90°Elbow (Regular radius)		0.12	2	0.02	0.04	8.2	1.04					0.30		199.23			0.31	14.28	
21 Straight Pipe		0.12	2	0.02	0.04	8.2								199.23	1	0.20		14.48	
22 90°Elbow (Regular radius)		0.12	2	0.02	0.04	8.2	1.04					0.30		199.23			0.31	14.79	
23 Straight Pipe		0.12	2	0.02	0.04	8.2								199.23	0.8	0.16		14.95	
24 Inlet Losses		0.12	2	0.02	0.04	8.2	1.04					1.00		199.23			1.04	15.99	
25 Filter		0.12	2	0.02	0.04	8.2		10	0.55	0.3						23.10	0.00	39.09	10 psi differential Per NYAW operators - 10 psi triggers cartridge replacement
26 Outlet Losses		0.12	2	0.02	0.04	8.2	1.04					0.20		199.23			0.21	39.30	2.5 Clean - 1 micron - Harmsco HUR 90 - at 80 gpm
27 Straight Pipe		0.12	2	0.02	0.04	8.2								199.23	1	0.20		39.50	7.5 dirty
28 90°Elbow (Regular radius)		0.12	2	0.02	0.04	8.2	1.04					0.30		199.23			0.31	39.81	
29 Straight Pipe		0.12	2	0.02	0.04	8.2								199.23	1.3	0.26		40.07	
30 90°Elbow (Regular radius)		0.12	2	0.02	0.04	8.2	1.04					0.30		199.23			0.31	40.38	
31 Straight Pipe		0.12	2	0.02	0.04	8.2								199.23	1	0.20		40.58	
32 90°Elbow (Regular radius)		0.12	2	0.02	0.04	8.2	1.04					0.30		199.23			0.31	40.89	
33 Straight Pipe		0.12	2	0.02	0.04	8.2								199.23	0.5	0.10		40.99	
34 Inlet Losses		0.12	2	0.02	0.04	8.2	1.04					1.00		199.23			1.04	42.03	
35 Filter		0.12	2	0.02	0.04	8.2		10	0.55	0.3						23.10	0.00	65.13	10 psi differential Per NYAW operators - 10 psi triggers cartridge replacement
36 Outlet Losses		0.12	2	0.02	0.04	8.2	1.04					0.20		199.23			0.21	65.35	2.5 Clean - 1 micron - Harmsco HUR 90 - at 80 gpm
37 Straight Pipe		0.12	2	0.02	0.04	8.2								199.23	1	0.20		65.53	7.5 dirty
38 90°Elbow (Regular radius)		0.12	2	0.02	0.04	8.2	1.04					0.30		199.23			0.31	65.84	
39 Straight Pipe		0.12	4	0.09	0.08	2.0								6.81	1.3	0.01		65.85	
40 Reducer (20 degree angle)		0.12	2	0.02	0.04	8.2	1.04	4	0.09	2.0	0.97	0.39		199.23			0.38	66.23	
41 Ball Valve		0.12	4	0.09	0.08	2.0	0.06					0.15		6.81			0.01	66.24	
42 Straight Pipe		0.12	4	0.09	0.08	2.0								6.81	3.3	0.02		66.26	
43 UV		0.12															2.30	68.56	
44 Straight Pipe		0.12	4	0.09	0.08	2.0								6.81	0.8	0.01		68.57	
45 Gate Valve		0.12	4	0.09	0.08	2.0	0.06					0.15		6.81			0.01	68.58	
46 Vacuum Breaker		0.12	4	0.09	0.08	2.0	0.06					0.15		6.81			0.01	68.59	
47 Reducer (20 degree angle)		0.12	2	0.02	0.04	8.2	1.04	4	0.09	2.0	0.97	0.39		199.23			0.38	68.97	
48 Gate Valve		0.12	2	0.02	0.04	8.2	1.04					0.15		199.23			0.16	69.12	
49 Straight Pipe		0.12	2	0.02	0.04	8.2								199.23	6.5	1.30		70.42	
50 90°Elbow (Regular radius)		0.12	2	0.02	0.04	8.2	1.04					0.30		199.23			0.31	70.73	
51 Straight Pipe		0.12	2	0.02	0.04	8.2								199.23	4.7	0.94		71.67	
52 Tee		0.12	2	0.02	0.04	8.2	1.04					0.30		199.23			0.31	71.98	
53 Straight Pipe		0.12	2	0.02	0.04	8.2								199.23	1.5	0.30		72.28	
54 Flow Control Valve		0.12	2	0.02	0.04	8.2	1.04					0.15		199.23			5.00	77.28	
55 Reducer (20 degree angle)		0.12	2	0.02	0.04	8.2	1.04	4	0.09	2.0	0.97	0.39		199.23			0.38	77.66	
56 Straight Pipe		0.12	4	0.09	0.08	2.0								6.81	0.5	0.00		77.66	
57 90°Elbow (Regular radius)		0.12	4	0.09	0.08	2.0	0.06					0.30		6.81			0.02	77.68	
58 Gate Valve		0.12	4	0.09	0.08	2.0	0.06					0.15		6.81			0.01	77.69	
59 Reducer (20 degree angle)		0.12	4	0.09	0.08	2.0	0.06	8	0.35	0.5	0.06	0.39		6.81			0.02	77.71	
60 Straight Pipe		0.12	8	0.35	0.17	0.5								0.23	2	0.00		77.71	
61 90°Elbow (Regular radius)		0.12	8	0.35	0.17	0.5	0.00					0.30		0.23			0.00	77.71	
62 Pressure After UV		0.12														207.90	0.00	285.61	90 psi on discharge
																		285.61	

A- HL pump, piping, saturator = 285.6
B - Elevation Change = 264.0

TDH = A + B 549.61

Basics Criteria -
Pumping Water Level = 320 feet below grade - LBG 72 hour pump test results for Pump #4
Pressure Differential of Cartridge Filters (Dirty) = 10 psi
Pressures rounded to feed the system (pressure gauge on discharge of UV before leaving plant) at 80 gpm = 90 psi

Appendix B

Well Pump Cutsheets and Curves

DIMENSIONS AND WEIGHTS

MODEL NO.	FIG.	HP	MOTOR SIZE	DISCH. SIZE	DIMENSIONS IN INCHES					APPROX. SHIP WT.
					A	B	C	D	E	
85S15-1	A	1 1/2	4"	3" NPT	25.9	13.6	12.3	3.75	5.2	37
85S30-2	A	3	4"	3" NPT	35.3	20.6	14.7	3.75	5.2	61
85S50-3	A	5	4"	3" NPT	40.7	23.6	17.1	3.75	5.2	75
85S50-4	A	5	4"	3" NPT	43.1	23.6	19.5	3.75	5.2	77
85S75-5	A	7 1/2	4"	3" NPT	51.5	29.6	21.9	3.75	5.2	95
85S75-6	A	7 1/2	4"	3" NPT	53.9	29.6	24.3	3.75	5.2	97
85S100-7	A	10	4"	3" NPT	70.5	43.9	26.6	3.75	5.2	151
85S100-8	A	10	4"	3" NPT	72.9	43.9	29.0	3.75	5.2	154
85S100-9	A	10	4"	3" NPT	75.3	43.9	31.4	3.75	5.2	156
85S75-5	A	7 1/2	6"	3" NPT	46.7	24.2	22.5	5.38	5.6	135
85S75-6	A	7 1/2	6"	3" NPT	49.1	24.2	24.9	5.38	5.6	137
85S100-7	A	10	6"	3" NPT	52.7	25.4	27.3	5.38	5.6	148
85S100-8	A	10	6"	3" NPT	55.0	25.4	29.6	5.38	5.6	151
85S100-9	A	10	6"	3" NPT	57.4	25.4	32.0	5.38	5.6	153
85S150-10	A	15	6"	3" NPT	62.4	28.0	34.4	5.38	5.6	170
85S150-11	A	15	6"	3" NPT	64.8	28.0	36.8	5.38	5.6	174
85S150-12	A	15	6"	3" NPT	67.2	28.0	39.2	5.38	5.6	176
85S150-13	A	15	6"	3" NPT	69.6	28.0	41.6	5.38	5.6	178
85S200-14	A	20	6"	3" NPT	74.5	30.6	43.9	5.38	5.6	193
85S200-15	A	20	6"	3" NPT	76.9	30.6	46.3	5.38	5.6	198
85S200-16	A	20	6"	3" NPT	79.3	30.6	48.7	5.38	5.6	200
85S200-17	A	20	6"	3" NPT	81.7	30.6	51.1	5.38	5.6	202
85S200-18	A	20	6"	3" NPT	84.1	30.6	53.5	5.38	5.6	204
85S250-19	A	25	6"	3" NPT	88.9	33.1	55.8	5.38	5.6	240
85S250-20	A	25	6"	3" NPT	91.9	33.1	58.8	5.38	5.6	244
85S250-21	A	25	6"	3" NPT	94.3	33.1	61.2	5.38	5.6	246
85S250-22	A	25	6"	3" NPT	96.7	33.1	63.6	5.38	5.6	249
85S300-23	A	30	6"	3" NPT	101.9	35.7	66.2	5.38	5.6	264
85S300-24	A	30	6"	3" NPT	104.1	35.7	68.4	5.38	5.6	266
85S300-25	A	30	6"	3" NPT	106.4	35.7	70.7	5.38	5.6	271
85S300-26	A	30	6"	3" NPT	108.8	35.7	73.1	5.38	5.6	273
85S300-27	A	30	6"	3" NPT	116.3	40.8	75.5	5.38	5.6	278
85S400-28	A	40	6"	3" NPT	118.7	40.8	77.9	5.38	5.6	281
85S400-29	A	40	6"	3" NPT	121.1	40.8	80.3	5.38	5.6	283
85S400-30	A	40	6"	3" NPT	123.4	40.8	82.6	5.38	5.6	287
85S400-33*	B	40	6"	3" NPT	139.7	40.8	98.9	5.38	6.9	343
85S400-36*	B	40	6"	3" NPT	146.9	40.8	106.1	5.38	6.9	354
85S500-39*	B	50	6"	3" NPT	171.0	57.8	113.2	5.38	6.9	448
85S400-33*	B	40	8"	3" NPT	134.7	35.8	98.9	7.5	6.9	377
85S400-36*	B	40	8"	3" NPT	141.9	35.8	106.1	7.5	6.9	390
85S500-39*	B	50	8"	3" NPT	152.0	38.8	113.2	7.5	6.9	498

NOTES: All models suitable for use in 6" wells, unless otherwise noted.
Weights include pump end with motor in lbs.
* Built into sleeve 3" NPT discharge, 8" min. well dia.

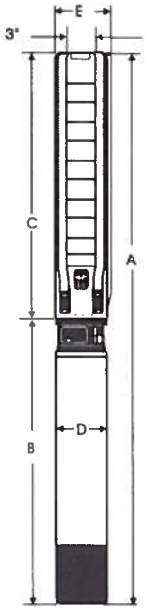

Fig. A

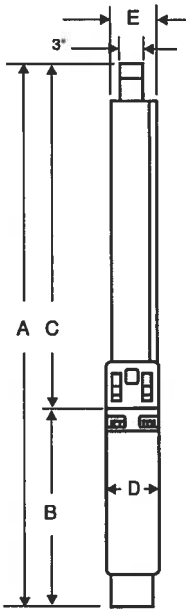

Fig. B

MATERIALS OF CONSTRUCTION

COMPONENT	CYLINDRICAL SHAFT (1- 39 Stgs.)
Check Valve Housing	304 Stainless Steel
Check Valve	304 Stainless Steel
Diffuser Chamber	304 Stainless Steel
Split Cone Nut	304 Stainless Steel
Split Cone	304 Stainless Steel
Impeller	304 Stainless Steel
Suction Interconnector	304 Stainless Steel
Seal Ring Support	304 Stainless Steel
Inlet Screen	304 Stainless Steel
Straps	304 Stainless Steel
Cable Guard	304 Stainless Steel
Priming Inducer	304 Stainless Steel
Coupling	316/329 Stainless Steel**
Pump Shaft	431 Stainless Steel
Intermediate Bearings	NBR
Impeller Seal Ring	NBR/PPS
Check Valve Seat	NBR/316 Stainless Steel
Upthrust Disc	Carbon/Graphite
Upthrust Stop Washer	304 Stainless Steel
8" Motor Adaptor Plate	304 Stainless Steel
Sleeve *	316 Stainless Steel
Sleeve Flange *	316 Stainless Steel

NOTES: Specifications are subject to change without notice.
* Required for 33-39 stages.
** 4" Coupling made of 316 Stainless Steel

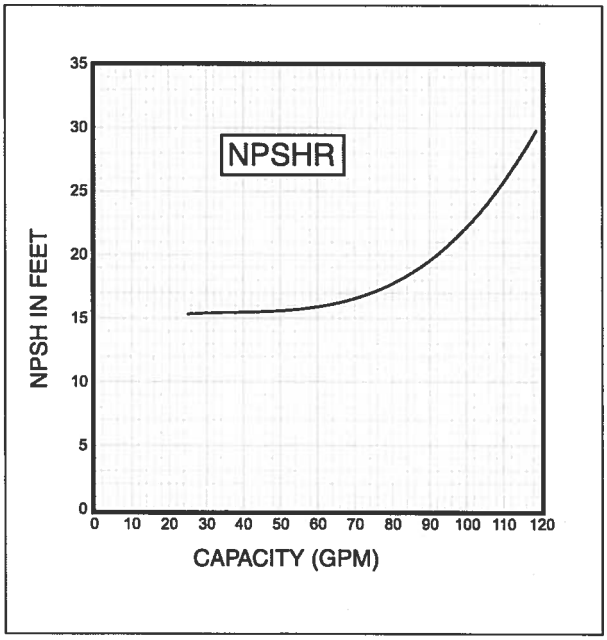

FLOW RANGE: 18 -118 GPM **OUTLET SIZE: 3" NPT** **NOMINAL DIA. 6"**

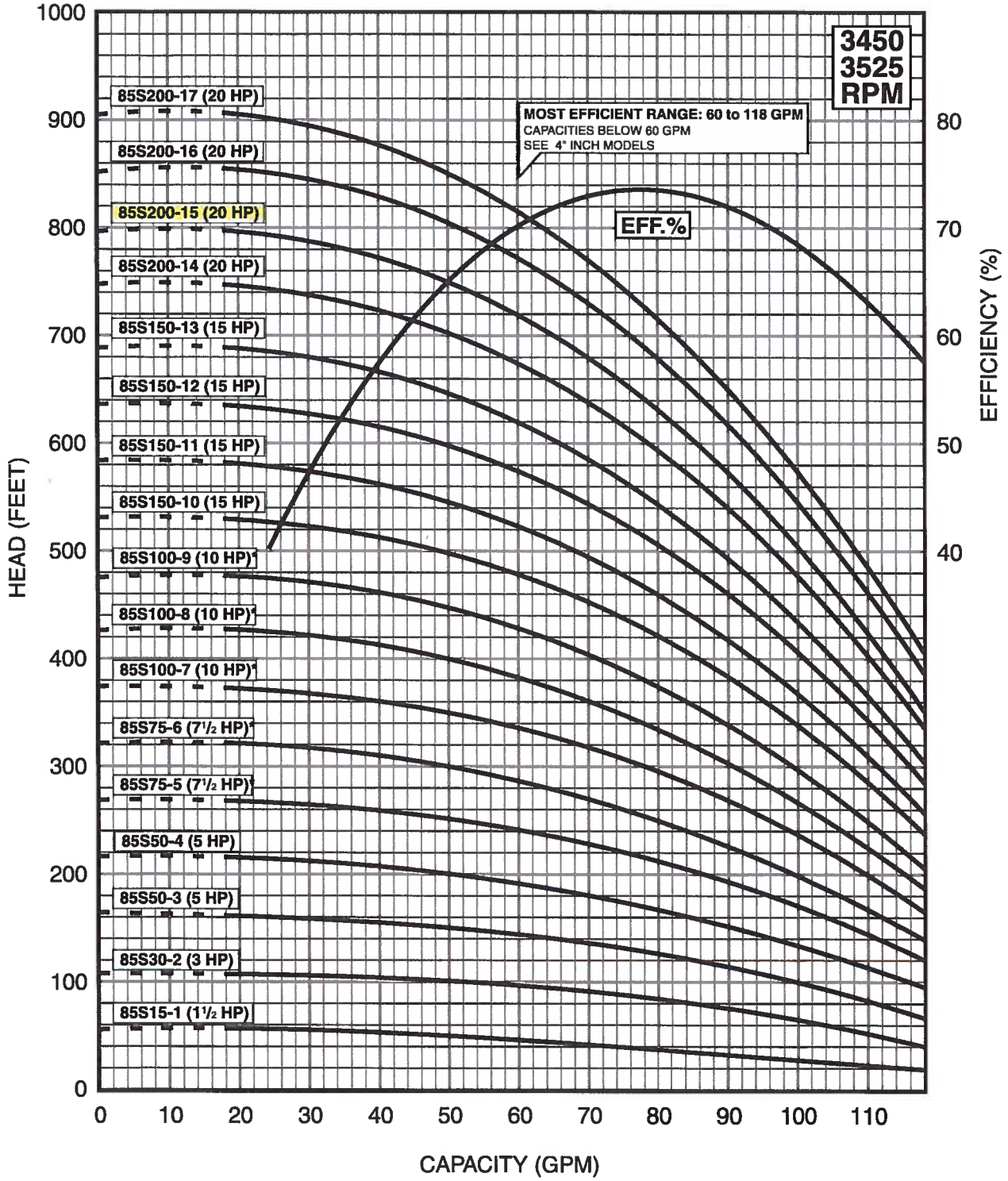

SPECIFICATIONS SUBJECT TO CHANGE WITHOUT NOTICE.
4" MOTOR STANDARD, 1.5-5 HP/3450 RPM
6" MOTOR STANDARD, 7.5-50 HP/3450 RPM.
* Alternate motor sizes available.

Performance conforms to ISO 9906 Annex A
@ 5 ft. min. submergence.

WILD OAKS WATER SYSTEM

Town of Lewisboro Site Development and Wetland Activity Permit Application for Well #4 and Well #6

Attachment 12

72 Hour Pump Tests for Well #4, Well #5, and Well #6

GROUNDWATER EXPLORATION AND PUMPING TEST PROGRAM NEW YORK AMERICAN WATER WILD OAKS WATER SYSTEM (T) LEWISBORO, NEW YORK

Prepared For:

New York American Water

August 2016

Prepared By:

LEGGETTE, BRASHEARS & GRAHAM, INC.
Professional Groundwater and Environmental Engineering Services
4 Research Drive, Suite 204
Shelton, CT 06484

TABLE OF CONTENTS

Page

INTRODUCTION 1

EXISTING SUPPLY SOURCE AND WATER DEMAND 1

HYDROGEOLOGIC SETTING 2
- Surficial Geology 2
- Bedrock Geology 3

GROUNDWATER EXPLORATION 3

PUMPING TEST PROGRAMS 4

MAY 2015 72-HOUR PUMPING TESTS – WELLS 4 AND 5 5
- Well 4 5
- Well 5 6
- Existing Sand and Gravel Production Wells 1 and 2 7
- Overburden Monitoring Wells 7
- Piezometers 8
- Bedrock Monitoring Wells 10
- Stream Gaging 11
- Precipitation 11

JUNE 2016 72-HOUR PUMPING TEST – WELL 6 12
- Well 6 12
- Existing Sand and Gravel Production Wells 1 and 2 13
- Overburden Monitoring Wells 13
- Piezometers 14
- Bedrock Monitoring Wells 15
- Stream Gaging 15
- Precipitation 16

WATER-QUALITY RESULTS 16

CONCLUSIONS 18

FIGURE
(at end of report)

Figure

1 Site Location Map and Offsite Well Monitoring Program

LIST OF APPENDICES
(at end of report)

Appendix

I WCDH – Well Site Approvals
II Well Completion Reports
III Pumping Wells
IV 180-Day Water-Level Projections
V Onsite Well Monitoring Wells
VI Piezometers
VII Offsite Monitoring Wells
VIII Stream Gaging
IX Water Quality
X Physical Parameters

PLATE
(in pocket at end of report)

Plate

1 Pumping Test Program

GROUNDWATER EXPLORATION AND PUMPING TEST PROGRAM NEW YORK AMERICAN WATER WILD OAKS WATER SYSTEM (T) LEWISBORO, NEW YORK

INTRODUCTION

The following are the results of the groundwater exploration and pumping test programs conducted by Leggette, Brashears & Graham, Inc. (LBG) for New York American Water at the Wild Oaks Water System on Nash Road in Lewisboro, New York (figure 1). The groundwater exploration program was initiated in 2014 to identify bedrock well locations that could potentially replace the existing sand and gravel production wells that currently supply the water system because of deteriorating yield and water quality.

LBG completed a hydrogeologic assessment of well field and identified bedrock test well locations that targeted favorable geologic features and accommodated the New York State Department of Health (NYSDOH) well siting guidelines where feasible. A well site application for two wells, Wells 4 and 5, was submitted to the Westchester County Department of Health and approval from WCDH was received in September 2015 (Appendix I). Wells 4 and 5 were drilled and a 72-hour pumping test program was conducted on the wells in May 2015.

Based on the results of the May 2015 pumping tests, it was determined that an additional bedrock test well should be drilled at the well field. A well site application was submitted to the WCDH for Well 6 and approval to drill the well was received in October 2015 (Appendix I). Well 6 was drilled and a 72-hour pumping test was conducted in June 2016.

EXISTING SUPPLY SOURCE AND WATER DEMAND

Prior to the completion of the groundwater exploration program, the Wild Oaks Water System had three existing wells (figure 1 and Plate 1). Wells 1 and 2 are sand and gravel production wells located inside the existing pump house building on the well field parcel. The wells are 38 and 39 feet deep, respectively, and both were reported to have previously yielded about 90 gpm (gallons per minute) to 100 gpm. Due to the close proximity of the two wells, they cannot be pumped simultaneously. The third well is a bedrock well located approximately 2,500 feet west of Wells 1 and 2. Well 3 is reported to be 450 feet deep and had an original yield of 14 gpm.

Well completion reports and construction details are not available for Wells 1, 2 and 3. Presently, the yields of Wells 1 and 2 are reported to be diminishing, and are less than 50 gpm. Because of the proximity of the wells (within 10 feet of each other), attempting well redevelopment, particularly chemical redevelopment, would be difficult to complete without taking both well offline. In addition, Well 3 has been taken out of service due to a significant reduction in yield.

The water demands for the system from 2013 through 2015 are provided on the table below.

Year	Average Daily Water Demand (gpd)	Maximum Day Water Demand (gpd)
2013	52,727	114,400
2014	43,200	89,080
2015	44,500	91,000

gpd gallons per day

HYDROGEOLOGIC SETTING

The Wild Oaks well field parcel is located on the south side of Nash Road in Lewisboro, New York (figure 1). A tributary stream of the Croton River flows through the well field parcel from east to west. A small man-made pond is located on the east side of the well field and a larger man-made lake on the west side. There are also Town of Lewisboro regulated wetland areas on the well field parcel (Plate 1).

Surficial Geology

Published surficial material maps for the area depict glacial till as underlying the well field parcel and surrounding area. Till is an unstratified, heterogenous, relatively impermeable mixture of clay, unsorted sand, gravel and stone to boulder size material. Till has low permeability and is considered a poor aquifer due to low yields, even for domestic use.

Although not depicted in the published maps, the existing sand and gravel production wells and other overburden test wells previously drilled on the well field parcel demonstrate that sand and gravel deposits are present. Although the regional extent of the stratified-drift aquifer is unknown, the boundary of the sand and gravel aquifer would likely be along the valley setting

topographic boundary and parallel the stream corridor, with till covering the upland settings to the north and south of the well field. Geologic logs from test wells completed on the well field parcel indicate that the aquifer is unconfined and, in areas where suitable aquifer material is encountered, the material is predominately medium to coarse sand and gravel.

Bedrock Geology

Published bedrock aquifer maps report that the well field parcel is underlain by Fordham Gneiss and Inwood Marble. The geologic contact of the two units bisects the valley setting and passes through the southern portion of the well field parcel, with the Inwood Marble on the south side of the contact and the Fordham Gneiss on the north side.

Inwood Marble (OCi) consists of white-whitish gray calcite and dolomite marble. The unit typically occurs along valley settings, paralleling river and stream corridors in the study area. The metamorphism of limestone and dolomite forms marble. The marble unit exhibits similar characteristics to other carbonate units; however, fewer solution cavities are reported. The marble bedrock typically exhibits low primary permeability based on the porosity of the bedrock; and secondary permeability caused by the presence of many interconnected fractures, joints and bedding planes can be moderate to high. The bedrock unit is less resistant to erosion than adjacent bedrock rock units and, as a result, occurs in the valley areas. The unit is brittle and under deformational stress forms numerous open fractures. Water is contained in the many interconnected fractures, joints and other secondary openings.

Fordham Gneiss (f) consists of undifferentiated gneiss bedrock. The general appearance of the rock shows light and dark minerals. The gneiss appears as randomly-speckled layers. The unit is highly resistant to weathering and to erosion from previous glaciation. The erosion resistance is reflected by the more rugged topography and higher altitudes in areas underlain by this rock type. In general, gneiss exhibits very low primary permeability and secondary permeability caused by the presence of interconnected fractures is low to moderate.

GROUNDWATER EXPLORATION

The groundwater exploration program began with the drilling of Wells 4 and 5 in January and May 2015. Northern Drilling, Inc. drilled Wells 4 and 5. Copies of the well logs for Wells 4

and 5 are included in Appendix II. Bedrock was encountered at a depth of 54 ft bg (feet below grade) in Well 4. The well was completed with a 12-inch outer diameter casing set to 54 feet and an 8-inch inner diameter casing set to 104 feet. The well was drilled to a total depth of 425 feet with an 8-inch diameter borehole. The main water-bearing fracture encountered during drilling was reported at a depth of 385 feet in the well.

Bedrock was encountered at a depth of 70 ft bg in Well 5. The well was completed with a 12-inch diameter casing set to 55 feet, 8-inch diameter casing set to 70 feet, and a 6-inch diameter casing set to 84 feet. The well was drilled to a total depth of 465 feet with a 6-inch diameter borehole. Following the completion of the 72-hour pumping test program in May 2015, the borehole of Well 5 was deepened to a depth of 625 feet in an effort to increase the yield of the well. However, no additional water-bearing fractures were encountered during the well deepening. The main water-bearing fracture encountered in Well 5 was reported at a depth of 350 feet.

Well 6 was drilled in May 2016 by Frey Drilling, Inc. A copy of the well log for Well 6 is also included in Appendix II. Bedrock was encountered at a depth of 50 feet in Well 6. The well was completed with 12-inch outer diameter casing set to 38 feet and 8-inch inner diameter casing set to 100 feet. The well was drilled to a total depth of 420 feet with an 8-inch diameter borehole. The main water-bearing fracture encountered during drilling was reported at a depth of 378 feet in Well 6.

PUMPING TEST PROGRAMS

A 72-hour pumping test program was conducted on Wells 4 and 5 from May 18 through May 30, 2015 and on Well 6 from June 13 through June 17, 2016 to determine the stabilized yields of the new wells, to assess potential water-level impact to existing wells and surface-water features, and to assess water quality.

The yields of Wells 4 and 5 demonstrated during the May 2015 pumping test program were 80 gpm and 28 gpm, respectively. The yield demonstrated in Well 6 during the June 2016 pumping test was 75 gpm. Hydrographs and summary tables of water-level measurements collected from Wells 4, 5 and 6 during their respectively pumping test periods are included in

Appendix III. Graphs for the 180-day water-level drawdown projections for Wells 4, 5 and 6 are included in Appendix IV.

During the pumping tests in May 2015 and June 2016, water-level measurements were collected from the onsite bedrock pumping wells; the existing Wild Oak sand and gravel Production Wells 1 and 2 (Appendix V); three onsite small-diameter overburden monitoring wells (Appendix V); six onsite piezometers (Appendix VI); and offsite bedrock wells, four in May 2015 and three in June 2016 (Appendix VII). In addition, stream flow measurements were collected from two locations in the small tributary stream of the Croton River that flows east to west through the well field during both pumping test periods and surface-water level measurements were collected from a staff gage set in the tributary stream during the May 2015 tests (Appendix VIII). The locations of the onsite wells and surface-water monitoring points measured during the pumping tests are shown on the Plate 1 and the locations of the offsite wells monitored are shown on figure 1.

MAY 2015 72-HOUR PUMPING TESTS - WELLS 4 AND 5

Well 4

The 72-hour pumping test on Well 4 was started on May 26, 2015 and ended on May 30, 2015. The water level in Well 4 prior to the start of pumping was at the top of the casing and the well was flowing artesian. The well pump was started at 10:08 on May 26. The initial pumping rate in the well was 47 gpm and was incrementally increased to a rate of 110 gpm by 12:50 on May 26. Following the last rate increase to 110 gpm, the well was allowed to pump with no further rate adjustments. As the water level in the well declined, the pumping rate slowed as a result of the loss of pressure head over the top of the pump. At 6:30 on the morning of May 27, the pumping rate in Well 4 reached 80 gpm where it stabilized.

At approximately 20:00 on May 27, the generator at Well 4 was struck by lightning. The lightning strike damaged the pump motor, so the generator was shut off at 22:00 and the pump was pulled from the well to complete repairs. On the morning of May 28, the pump was reinstalled in Well 4 and pumping was resumed at 7:26. The pumping rate in Well 4 was set at 80 gpm upon restart of the pump. One manual rate increase was completed at 15:00 on May 28 to raise the rate back to 80 gpm after a slight drop occurred. No further rate adjustments were

conducted and the pumping rate remained at 80 gpm for the duration of the test until shut down on May 30.

Following the restart of the well pump after the lightning strike, LBG contacted Mr. James Garry at the New York State Department of Environmental Conservation (NYSDEC) Division of Water to discuss the effect of the 8.5 hour shutdown on the test duration. Because Well 4 had demonstrated a trend toward pumping rate and water-level stabilization prior to the lightning strike, it was decided that an additional 48 hours of pumping with 6 hours of stabilized yield and drawdown at the end of the test would be sufficient.

The pump in Well 4 was shut down at 8:02 on May 30. The pumping water level in Well 4 just prior to the end of the test was 321.74 ft btoc (feet below top of casing). After shut off of the well pump, the water level in the well recovered rapidly. The well achieved 90% water-level recovery to the pre-test static level approximately 13 hours after shutdown of the pump and the well was flowing over the top of casing by the following morning on May 31.

Well 4 was pumped for total of 84 hours and 37 minutes (not including the period of time the pump was off due to the lightning strike). The stabilized pumping rate in Well 4 at the end of the test was 80 gpm and the water-level drawdown in the well was less than 0.5 foot per 100 feet of available drawdown in the well over the last 6+ hours of the test period.

A 180-day water-level drawdown projection has been completed on Well 4 using the data from after the restart of the well following the lightning strike. The projection shows a pumping water level of 367.34 ft btoc after 180 days of pumping. This water level is above the major water-bearing fracture in the well reported at a depth of 385 feet.

Well 5

The 72-hour pumping test on Well 5 was started on May 18, 2015 and ended on May 21, 2015. The water level in Well 5 prior to the start of pumping was 3.10 ft btoc. The pump in the well was started at 11:38 on May 18. The pumping rate in the well at the start of the test was set at 84 gpm. However, rapid drawdown was observed at this initial pumping rate so the rate was reduced to 28 gpm by 12:09 on May 18. The pumping rate in Well 5 remained at 28 gpm for the duration of the test period.

The test on Well 5 was ended at 12:14 on May 21. The pumping water level in Well 5 just prior to shut down of the pump was 300.39 ft btoc, which is total drawdown of 297.29 feet.

The water level in the well recovered rapidly and the well achieved 90% water-level recovery to the pre-test static level approximately one hour after shutdown of the pump. The well reached 100% recovery at approximately 23:00 on May 21.

Well 5 was pumped for total of 72 hours and 36 minutes. The stabilized pumping rate at the end of the test in Well 5 was 28 gpm and the water-level drawdown in the well was less than 0.5 foot per 100 feet of available drawdown in the well over the last 6+ hours of the test period.

A 180-day water-level drawdown projection has been completed on Well 5. The projection shows a pumping water level of 301.32 ft btoc after 180 days of pumping. This water level is above the major water-bearing fracture in the well reported at a depth of 350 feet.

Existing Sand and Gravel Production Wells 1 and 2

Manual water-level measurements were collected from the Wild Oaks Production Wells 1 and 2 at the well field during the pumping tests on Wells 4 and 5. Well 2 remained in-service pumping in the range of 50 to 54 gpm during the data collection period to supply water to the District. The pumping cycles in Well 2 can be seen in a patterned rising and falling of the water levels in Production Wells 1 and 2; in the three onsite 2½-inch diameter overburden monitoring wells; in the groundwater level in piezometers PZ-B, PZ-C and PZ-E; and in the water level in bedrock Well 5.

During the pumping tests conducted on Wells 4 and 5, no discernible water-level drawdown was measured in the existing Production Wells 1 and 2 that is attributed pumping in the Wells 4 and 5.

Overburden Monitoring Wells

Three existing 2½-inch diameter monitoring wells, MW-1, MW-2 and MW-3, are located at the Wild Oaks well field. The monitoring wells were installed during a previous groundwater exploration program conducted at the site in the late 1980s. The monitoring wells are screened in the overburden material at the well field, but the depth settings of the well screens are unknown.

During the background period prior to the start of the pumping tests on Wells 4 and 5, fluctuations can be seen in the water levels in the overburden monitoring wells that correspond with the pumping cycles in the existing Wild Oaks Production Well 2. During the pumping test

conducted on Well 4, additional water-level drawdown of about 2 feet was measured in MW-3, which is the closest monitoring well location to Well 4. No discernible drawdown was measured in MW-1 or MW-2 during this test.

During the pumping test on Well 5, water-level drawdown was measured in all three of the overburden monitoring wells. The drawdown in the MW-1 was 0.2 foot, in MW-2 was 0.1 foot, and in MW-3 was 0.5 foot. The table below is a summary of the drawdown observed in the overburden monitoring wells at the well field during the pumping tests.

Well ID	Measured Well Depth (feet below top of casing)	Drawdown Observed During Pumping Test of Well 4 (feet)	Drawdown Observed During the Pumping Test of Well 5 (feet)
MW-1	45.5	ND	0.2
MW-2	29.5	ND	0.1
MW-3	24.5	2.0	0.5

ND None discernible

Piezometers

Surface-water and shallow groundwater measurements were collected from six onsite piezometer locations during the pumping tests. Surface-water measurements were collected from the outside of the piezometer casing and shallow groundwater measurements were collected from the interior of the piezometers. The piezometers were constructed with a 5-foot length of galvanized steel pipe attached to a 1-foot long, 10-slot screened drive point that was driven in the overburden material.

Two piezometer locations, PZ-A and PZ-F, were installed in the stream channel that flows through the well field from east to west. PZ-A was placed in the channel close to Well 5 and PZ-F was installed approximately 200 feet upstream. The surface water and shallow groundwater in PZ-A and PZ-F showed no effects from the pumping of the existing sand and gravel Production Well 2 during the data collection period and no water-level drawdown was measured in either PZ-A or PZ-F during the pumping tests on Wells 4 and 5 that is attributed to pumping in the bedrock wells.

Two piezometer locations, PZ-B and PZ-D, were installed in the smaller pond at the well field. PZ-B was installed near Well 5 and PZ-D was installed near Well 4. During the background monitoring period, water-level fluctuations in the shallow groundwater in PZ-B were observed that correlate to pumping in the existing Production Well 2, but no corresponding water-level fluctuation was discernible in the surface water at PZ-B. No water-level change was

measured in the surface water or groundwater in PZ-D from pumping in Well 2. During the 72-hour pumping tests, no water-level drawdown was measured in the surface water or groundwater in PZ-B or PZ-D that correspond to pumping in the bedrock Wells 4 and 5.

Two piezometer locations, PZ-C and PZ-E, were installed in the lake at the well field. PZ-C was installed near Well 5 and PZ-E was installed near Well 4. During the background monitoring period, water-level fluctuations were measured in the groundwater in both PZ-C and PZ-E that correlate to pumping in Production Well 2, but no corresponding water-level fluctuation was discernible in the surface water at either PZ-C or PZ-E.

Drawdown in the groundwater level in PZ-E was also measured during the pumping tests that may be attributed to pumping in bedrock Wells 4 and 5. During the test on Well 4, there was potentially 0.25 foot of drawdown measured in the groundwater at PZ-E and during the test on Well 5 potentially 0.1 foot of drawdown was measured in PZ-E. No corresponding drawdown in the surface-water level was measured on the exterior of PZ-E during either pumping test. There was no water-level drawdown measured in the surface water or groundwater at PZ-C during either of the pumping tests on Wells 4 and 5.

The table below is a summary of the drawdown observed in the piezometers at the well field during the pumping tests.

Piezometer ID	**Approximate Drawdown Observed During Pumping Test of Well 4 (feet) (Surface Water/Groundwater)**	**Approximate Drawdown Observed During the Pumping Test of Well 5 (feet) (Surface Water/Groundwater)**
PZ-A	ND/ND	ND/ND
PZ-B	ND/ND	ND/ND
PZ-C	ND/ND	ND/ND
PZ-D	ND/ND	ND/ND
PZ-E	ND/0.25	ND/0.1
PZ-F	ND/ND	ND/ND

ND None discernible

The minimal drawdown measured in the groundwater during the bedrock well pumping tests was limited to the area near PZ-E in the lake. No surface-water impacts were measured at any of the monitoring locations that are attributed to pumping in the bedrock wells. The data from the May 2015 pumping tests indicates that the bedrock wells have much less of an effect on the shallow groundwater at the well field than the existing sand and gravel production wells. No

significant impact on the shallow groundwater or surface water at the well field from use of the bedrock wells is anticipated.

Bedrock Monitoring Wells

Water-level measurements were collected from four offsite bedrock wells located near the well field during the pumping test program on Wells 4 and 5. Three of the wells monitored were residential supply wells located on neighboring properties that are not part of the Wild Oaks Water District service area. The fourth well was the Wild Oaks Well 3, which is a supply well for the Water District that is not currently in service due to low yield. Wells 4 and 5 were also used as bedrock monitoring well locations when they were not actively being pumped.

Water-level drawdown was measured in the offsite well at 73 Nash Road as a result of pumping in both Wells 4 and 5. During the test on Well 4, approximately 3 feet of drawdown was measured in the well at 73 Nash Road that is attributed to pumping at the well field, and during the test on Well 5 approximately 7 feet of drawdown was measured. Based on the hydrograph for the well at 73 Nash Road, the drawdown measured during the pumping tests did not appear to have a significant effect on the well and future use of Wells 4 and 5 to supply the District will not likely impact the use of this residential supply well.

No discernible water-level drawdown was measured in the wells at 79 Nash Road, 195 Waccabuc Road or in Wild Oaks Well 3 during the pumping test program that is attributed to pumping in Wells 4 and 5.

In the onsite bedrock test wells, approximately 60 feet of drawdown was measured in Well 5 during the pumping test on Well 4, and 8 feet of drawdown was measured in Well 4 during the test on Well 5. The table below is a summary of the drawdown observed in the bedrock monitoring wells.

Well ID	Drawdown Observed During Pumping Test of Well 4 (feet)	Drawdown Observed During the Pumping Test of Well 5 (feet)
Onsite Wells		
Well 4	--	8
Well 5	60	--
Offsite Wells		
73 Nash Road	3	7
79 Nash Road	ND	ND
195 Waccabuc Road	ND	ND
Well 3	ND	ND

ND None discernible

Stream Gaging

Streamflow measurements were collected from gaging location SG-1 located about 100 feet downstream of Well 5, and from SG-2 located about 200 feet upstream of Well 5. No discernible change in flow was measured in the stream at the well field that is attributed to pumping in Wells 4 and 5 during the pumping test period.

A staff gage was also installed in the stream channel at the location of SG-1 to measure the water-level height during the test period. The measurements from the staff gage (Staff-1) showed no change in water-level height that is attributed to pumping in the bedrock wells during the test period.

Precipitation

Daily precipitation totals from a nearby weather station that published hourly data on the internet are provided in the table below. These precipitation totals have also been overlain on the hydrographs for the pumping wells, monitoring wells, and piezometers.

Date	Precipitation Total (inches)	Date	Precipitation Total (inches)
5/15/2015	0.00	5/26/2015	0.00
5/16/2015	0.74	5/27/2015	0.41
5/17/2015	0.00	5/28/2015	0.32
5/18/2015	0.00	5/29/2015	0.00
5/19/2015	0.10	5/30/2015	0.00
5/20/2015	0.00	5/31/2015	0.50
5/21/2015	0.00	6/1/2015	3.16
5/22/2015	0.00	6/2/2015	0.33
5/23/2015	0.00	6/3/2015	0.00
5/24/2015	0.00	6/4/2015	0.00
5/25/2015	0.00	--	--

Precipitation was received during the pre-test period on May 16 (0.74 inch) and the post-test period on May 31/June 1/June 2 (3.99 inches total). These precipitation events caused a measurable rise in water level in all of the monitoring points, except Well 4 which was flowing artesian and no change could be measured.

The water-level rise in response to the May 16 rain event was of short duration in the monitoring locations. Overall, the water level rise in response to this rain event did not last long after the rain ended and the water levels in the monitoring locations returned to the trends they were on before the rain occurred.

The rain event which occurred after the pumping test on Well 4 was completed was of longer duration and magnitude than the pre-test event. The water-level rise in the monitoring locations in response to the post-test rain event did not dissipate after the rain event ended and the water levels in the monitoring locations at the well field remained high.

Precipitation also was measured during the 72-hour pumping test. During the test on Well 5, 0.10 inch of rain was recorded on May 19; and during the test on Well 4, a total of 0.73 inch of rain was recorded between May 27 and 28 . A slight rise in water levels was observed in the piezometers and the overburden monitoring wells in response to these rain events during the 72-hour tests, but the rises were of short duration, and the water levels in the monitoring locations resumed their prior trends before the ends of the test periods were reached. No significant response to these rain events that occurred during the 72-hour pumping tests were observed in the bedrock wells.

JUNE 2016 72-HOUR PUMPING TEST – WELL 6

Well 6

The 72-hour pumping test on Well 6 was started on June 14, 2016 and ended on June 17, 2016. The water level in Well 6 prior to the start of pumping was 0.47 ft btoc (foot below top of casing). The pump in the well was started at 10:20 on June 14. The pumping rate at the start of the test in Well 6 was above 100 gpm. As the test progressed, the pumping rate declined as a result of the decreasing pressure head over the well pump. Manual rate adjustments were made at 14:31 on June 14, and at 8:25 and 15:13 on June 15 in an attempt to maintain a pumping rate of 80 gpm. However, by approximately 18:00 on June 15, the pumping rate in Well 6 had declined to 75 gpm. No further rate adjustments could be made because the well pump was operating at its maximum capacity. Well 6 pumped at 75 gpm for the duration of the test period.

The test on Well 6 was ended at 10:54 on June 17, 2016. The pumping water level in Well 6 just prior to shut down of the pump was 223.35 ft btoc, which is total drawdown of 222.87 feet. The water level in the well recovered rapidly and the well achieved 100% water-level recovery to the pre-test static level approximately 25 hours after shut down of the pump.

Well 6 was pumped for total of 72 hours and 34 minutes. The stabilized pumping rate at the end of the test in Well 6 was 75 gpm and the water-level drawdown in the well was less than 0.5 foot per 100 feet of available drawdown in the well over the last 6+ hours of the test period.

A 180-day water-level drawdown projection has been completed on Well 6. The projection shows a pumping water level of 230.95 ft btoc after 180 days of pumping. This leaves approximately 147 feet of available drawdown above the major water-bearing fracture in the well reported at a depth of 378 feet. Based on the available drawdown, it is likely that Well 6 could be pumped at a higher rate than 75 gpm.

Existing Sand and Gravel Production Wells 1 and 2

Manual water-level measurements were collected from the Wild Oaks Production Wells 1 and 2 at the well field during the pumping test on Well 6. Well 2 remained in-service pumping at about 46 gpm during the test period to supply water to the District. The pump in Well 2 remained on throughout most of the data collection period, with only very brief shut downs on June 9, 11, 17 and 22.

Water-level drawdown was measured in Wells 1 and 2 during the test period that is attributed to pumping in Well 6. Drawdown of about 0.3 foot was measured in Well 1 and about 0.4 foot was measured in Well 2.

Overburden Monitoring Wells

Water-level data was collected from monitoring wells MW-1, MW-2 and MW-3 during the pumping test on Well 6. Water-level drawdown of 0.15 feet was measured in MW-1 and 2.0 feet in MW-3 that is attributed to pumping in Well 6. No water-level drawdown from Well 6 was measured in MW-2. The table below is a summary of the drawdown observed in the overburden monitoring wells at the well field during the pumping test.

Well ID	Measured Well Depth (feet below top of casing)	Drawdown Observed During Pumping Test of Well 6 (feet)
MW-1	45.5	0.15
MW-2	29.5	ND
MW-3	24.5	2.0

ND None discernible

Piezometers

Surface-water and shallow groundwater measurements were collected from six onsite piezometer locations during the pumping test on Well 6. Surface-water measurements were collected from the outside of the piezometer casing and shallow groundwater measurements were collected from the interior of the piezometers.

Piezometers PZ-A and PZ-F were installed in the stream channel that flows through the well field from east to west. No drawdown was measured in the surface water or groundwater at PZ-A or PZ-F during the test that is attributed to pumping in Well 6.

Piezometers PZ-B and PZ-D were installed in the smaller pond at the well field. During the 72-hour pumping test, no water-level drawdown was measured in the surface water or groundwater in PZ-B or PZ-D that correspond to pumping in Well 6.

Piezometers PZ-C and PZ-E were installed in the lake at the well field. PZ-C was installed near the pump house and PZ-E was installed near Wells 4 and 6. Drawdown of approximately 0.09 foot was measured in the groundwater level in PZ-E that may be attributed to pumping in Well 6. No corresponding drawdown in the surface-water level was measured on the exterior of PZ-E during the pumping test. There was no water-level drawdown measured in the surface water or groundwater at PZ-C that is attributed to pumping in Well 6.

The table below is a summary of the drawdown observed in the piezometers at the well field during the test on Well 6.

Piezometer ID	Approximate Drawdown Observed During Pumping Test of Well 6 (feet) (Surface Water/Groundwater)
PZ-A	ND/ND
PZ-B	ND/ND
PZ-C	ND/ND
PZ-D	ND/ND
PZ-E	ND/0.09
PZ-F	ND/ND

ND None discernible

The minimal drawdown measured in the groundwater during the pumping test was limited to the area near PZ-E in the lake. No surface-water impacts were measured at any of the monitoring locations that are attributed to pumping in Well 6. Based on this data and the data from the May 2015 pumping tests, the bedrock wells have much less of an effect on the shallow groundwater at the well field than the existing sand and gravel production wells. No significant

impact on the shallow groundwater or surface water at the well field from use of the bedrock wells is anticipated.

Bedrock Monitoring Wells

Water-level measurements were collected from three offsite bedrock wells located near the well field during the pumping test program on Well 6. Two of the wells monitored were residential supply wells located at 73 Nash Road and 79 Nash Road, and the third well was Wild Oaks Well 3. Onsite Wells 4 and 5 were also measured during the pumping test period.

Water-level drawdown was measured in the two offsite residential wells at 73 Nash Road and 79 Nash Road as a result of pumping Well 6. The drawdown at 73 Nash Road was 2.8 feet and at 79 Nash Road was 3.0 feet. No discernible water-level drawdown was measured in Wild Oaks Well 3 that is attributed to pumping in Well 6.

During the pumping test on Well 6, 224.1 feet of drawdown was measured in Well 4 and 44 feet of drawdown was measured in Well 5. The table below is a summary of the drawdown observed in the bedrock monitoring wells.

Well ID	Drawdown Observed During Pumping Test of Well 6 (feet)
Onsite Wells	
Well 4	224.1
Well 5	44
Offsite Wells	
73 Nash Road	2.8
79 Nash Road	3.0
Well 3	ND

ND None discernible

Stream Gaging

Streamflow measurements were collected from the stream channel that flows through the well field near the existing pump house. Stream gaging location SG-1 was positioned in the channel approximately 100 feet downstream of Well 5 and SG-2 was located about 200 feet upstream of Well 5. No discernible change in flow was measured in the stream at the well field that is attributed to pumping in Well 6.

Precipitation

Daily precipitation totals from a nearby weather station that published hourly data on the internet are provided in the table below. These precipitation totals have also been overlain on the hydrographs for the pumping wells, monitoring wells, and piezometers.

Date	Precipitation Total (inches)	Date	Precipitation Total (inches)
6/6/2016	0.00	6/16/2016	0.00
6/7/2016	0.00	6/17/2016	0.00
6/8/2016	0.02	6/18/2016	0.00
6/9/2016	0.00	6/19/2016	0.00
6/10/2016	0.00	6/20/2016	0.00
6/11/2016	0.09	6/21/2016	0.00
6/12/2016	0.00	6/22/2016	0.00
6/13/2016	0.00	6/23/2016	0.00
6/14/2016	0.00	6/24/2016	0.00
6/15/2016	0.00	--	--

Precipitation was received during the pre-test period on June 8 (0.02 inch) and on June 11 (0.09 inch). No precipitation was received during the pumping test on Well 6 or post-test recovery period.

A slight rise in the surface-water and groundwater levels in the piezometers, the groundwater levels in the overburden monitoring wells, and in bedrock Well 5 was measured in response to the 0.09 inch rain event on June 11. The pre-test precipitation had no discernible effect on the water levels in the offsite bedrock wells and onsite Wells 4 and 6.

This rise in water level the piezometers and overburden wells was short in duration and the water levels in these monitoring points quickly resumed the slight downward trend observed prior to the rain event. This slight downward trend in these monitoring locations continued into the start of the pumping test period on Well 6 and throughout the post-test recovery period.

WATER-QUALITY RESULTS

Water samples were collected from Wells 4, 5 and 6 during their respective 72-hour pumping tests. The water samples were submitted to Envirotest Laboratories, Inc. in Newburgh, NY for analysis for all parameters listed in the New York State Department of Health (NYSDOH) Sanitary Code, Part 5, Subpart 5-1 and for microscopic particulate analysis (MPA)

and giardia and cryptosporidium analyses. Copies of the laboratory reports for Wells 4, 5, and 6 are included in Appendix IX.

The samples collected from Well 4 met all NYSDOH drinking water standards with the exception of the presence of total coliform. The well will need to be disinfected and resample for total coliform prior to being placed into service. Additionally, the total dissolved solids (TDS) concentration in Well 4 was elevated at 974 mg/L (milligrams per liter).

The samples collected from Well 5 also met all NYSDOH drinking water standards with the exception of the presence of total coliform. Well 5 will need to be disinfected and resample for total coliform prior to being placed into service.

The samples collected from Well 6 met all NYSDOH drinking water standards with the exception of the presence of total coliform and color. The color value reported was 20 units, which is above the maximum contaminant level (MCL) of 15 units. The turbidity concentration in Well 6 was 0.26 nephelometric turbidity units (NTU), which is relatively low, so the cause of the elevated color is unclear.

A trace detection of toluene was reported in Well 6 at a concentration of 0.618 ug/L (micrograms per liter). This concentration is below the MCL of 5 ug/l for toluene and no other VOCs were detected in the sample collected. The trace toluene detection is likely a remnant from the use of electrical tape and/or new electrical wiring in the well with the setting of the temporary well pump. Both the tape adhesive and the color coating on electrical wiring can contain trace amounts of toluene.

Well 6 was disinfected, pump to waste, and a second total coliform sample was collected after the pumping test program was completed. The results for the resampling event were negative for the presence of total coliform. A copy of the laboratory results from the resampling event is included in Appendix IX.

Samples from Wells 4, 5 and 6 were all negative for giardia and cryptosporidium. The MPA results for Well 4 reported the presence of pollen, but no primary indicator organisms (i.e., diatoms, algae, etc.) were detected. The sample from Well 4 indicates a low potential risk for GWUDI (groundwater under the direct influence of surface water).

The MPA for Well 5 reported the presence of green algae exhibiting chlorophyll fluorescence, pollen and plant debris. This sample from Well 5 indicates a moderate to high potential risk for GWUDI.

No primary or secondary GWUDI indictor organisms were detected in the MPA sample collected from Well 6. The sample from Well 6 indicates a low potential risk for GWUDI.

Physical parameters were measured in Wells 4, 5 and 6 and the nearby surface water during their respective pumping test periods. Graphs and tables of measurements collected are included in Appendix X.

The temperature readings from Wells 4 and 5 showed no significant changes during the test period compared to the nearby surface water which showed daily fluctuation. Conductivity and TDS values measured in Well 4 were less than the concentrations from the nearby pond, but similar to the concentrations in the adjacent lake. No significant changes in TDS or conductivity occurred during the test period to assess whether Well 4 and lake surface water would show a corresponding change. The conductivity and TDS values measured in Well 5 did not show a similarity in concentrations with any of the adjacent water bodies. The pH values measured in the wells and surface-water bodies showed minor fluctuations during the test period. This was likely the result of the changing ambient air temperature affecting the accuracy of the hand-held water-quality meter.

During the pumping test on Well 6, temperature was measured in Well 6 and the surface-water in the adjacent pond and lake. The temperature in Well 6 was approximately 7 degrees less than the surface water in the lake and about 11 degrees lower than the surface water in the pond. The surface water in the pond and lake showed a slight upward trend (warmed) throughout the test period. The temperature in Well 6 showed some minor fluctuation throughout the data collection period, but the temperature in Well 6 did not show a similar warming trend as the nearby surface water.

Conductivity values measured in Well 6 were less than the concentrations from the nearby pond, but similar to the concentrations in the adjacent lake. The pH values measured in the wells and surface-water bodies showed minor fluctuations during the test period. This was likely the result of the changing ambient air temperature affecting the accuracy of the hand-held water-quality meter.

CONCLUSIONS

- The stabilized pumping rate in Well 4 at the end of the test of the 72-hour pumping test completed in May 2015 was 80 gpm. The water-level drawdown in the well was less than

0.5 foot per 100 feet of available drawdown in the well over the last 6+ hours of the test period. The 180-day water-level drawdown projection completed on the data collected from Well 4 shows a pumping water level of 367.34 ft btoc after 180 days of pumping. This water level is above the major water-bearing fracture in the well reported at a depth of 385 feet.

- The stabilized pumping rate in Well 5 at the end of the 72-hour pumping test completed in May 2015 was 28 gpm. The water-level drawdown in the well was less than 0.5 foot per 100 feet of available drawdown in the well over the last 6+ hours of the test period. The 180-day water-level drawdown projection completed on the data collected from Well 5 shows a pumping water level of 301.32 ft btoc after 180 days of pumping. This water level is above the major water-bearing fracture in the well reported at a depth of 350 feet.

- The stabilized pumping rate in Well 6 at the end of the 72-hour pumping test completed in June 2016 was 75 gpm. The water-level drawdown in the well was less than 0.5 foot per 100 feet of available drawdown in the well over the last 6+ hours of the test period. The 180-day water-level drawdown projection completed on Well 6 shows a pumping water level of 230.95 ft btoc after 180 days of pumping. This leave approximately 147 feet of available drawdown above the major water-bearing fracture in the well reported at a depth of 378 feet. Based on the available drawdown, it is likely that Well 6 could be pumped at a higher rate than 75 gpm.

- Pre-test water-level data collected during the May 2015 pumping tests from the onsite monitoring locations showed that the existing Production Well 2 caused water-level fluctuation in the groundwater level in the onsite overburden monitoring wells, in the piezometer in the pond closest to Well 2 (PZ- B) and the two piezometers in the lake (PZ-C and PZ-E), and in bedrock Well 5. The water-level data collected during the June 2016 pumping test showed similar findings.

- During the pumping tests conducted on Wells 4 and 5, water-level drawdown was measured in one of the four offsite bedrock monitoring well locations. Approximately 3 feet of drawdown was measured in the well at 73 Nash Road during the test on Well 4 and

approximately 7 feet during the test on Well 5. During the pumping test on Well 6, water-level drawdown of 2.8 feet was measured at 73 Nash Road and 3.0 feet at 79 Nash Road. Based on the hydrographs for the offsite wells, the drawdown measured during the pumping tests did not appear to have a significant effect on the wells and future use of Wells 4, 5 and 6 to supply the Wild Oaks Water District will not likely impact the use of these residential supply well.

- No discernible water-level drawdown was measured in Production Wells 1 and 2 during the pumping tests on Wells 4 and 5 that was attributed to these bedrock wells pumping. During the pumping test on Well 6, approximately 0.3 feet of drawdown was measured in Well 1 and 0.4 foot was measured in Well 2.

- During the pumping test on Well 4, approximately 2.0 feet of water-level drawdown was measured in overburden monitoring well MW-3. No drawdown was measured in the other two onsite overburden monitoring wells during the test on Well 4. During the test on Well 5, water-level drawdown was measured in all three of the overburden monitoring wells which ranged from 0.1 to 0.5 foot. During the test on Well 6, water-level drawdown of 0.15 foot was measured in MW-1 and 1.3 feet in MW-3. No drawdown was measured in MW-2.

- Water-level drawdown which is attributed to pumping in the bedrock wells was measured in the groundwater at one piezometer location, PZ-E set in the lake near Wells 4 and 6, during the three pumping tests. The drawdown measured in the groundwater level at PZ-E during the tests on Wells 4, 5 and 6 was 0.25, 0.10 and 0.09 foot, respectively. No water-level drawdown was measured in the groundwater at any of the other piezometers during the pumping tests, and no surface-water level changes from pumping the bedrock wells was measured at any of the piezometer locations. Based on pumping test data, the bedrock wells have much less of an effect on the shallow groundwater at the well field than the existing sand and gravel production wells. No significant impact on the shallow groundwater or surface water at the well field from use of the bedrock wells is anticipated.

- Stream gaging was conducted in the stream channel that flows through the well field during the three pumping tests. The data shows no discernible effect on stream flow from pumping of the bedrock wells.

- The water-quality results from the samples collected from Wells 4 and 5 during the pumping tests met all NYSDOH drinking water standards with the exception of the presence of total coliform was detected in both wells. The wells will need to be disinfected and resampled to demonstrate the absence of total coliform prior to being placed into service. Additionally, the TDS concentration in Well 4 was elevated at 974 mg/L.

- The water-quality results from Well 6 meet all NYSDOH drinking water standards with the exception of the presence of total coliform and color. Well 6 was disinfected and resampled for total coliform after the pumping test was completed. The resample was absent for the presence of total coliform. The color value reported was 20 units, which is above the NYSDOH MCL of 15 units. The turbidity concentration in Well 6 was 0.26 NTU, which is relatively low, so the cause of the elevated color is unclear.

- A trace detection of toluene was reported in Well 6 at a concentration of 0.618 ug/L. The concentration is below the MCL of 5 ug/l for toluene and no other VOCs were detected in the sample collected. The trace toluene detection is likely a remnant from the use of electrical tape and/or new electrical wiring in the well with the setting of the temporary pump. Both the tape adhesive and the color coating on electrical wiring can contain trace amounts of toluene.

- The giardia and cryptosporidium sample results for Wells 4, 5, and 6 were negative. The MPA for Well 4 reported no primary indictor organisms which indicate a low potential risk of GWUDI. The MPA for Well 5 reported the presence of green algae exhibiting chlorophyll fluorescence, pollen and plant debris. The MPA sample from Well 5 indicates a moderate to high potential risk for GWUDI. No primary or secondary GWUDI indictor organisms were detected in the MPA sample collected from Well 6. The sample from Well 6 indicates a low potential risk for GWUDI.

- The moderate to high risk MPA sample result for Well 5 will likely result in a positive GWUDI designation for the well. Because of the water treatment requirements associated with GWUDI, New York American Water could consider not connecting Well 5 to the water system at this time. The tested yields of Wells 4 and 6 at 80 gpm and 75 gpm, respectively, are able to individually meet the 2015 maximum day system demand of 91,000 gpd (63.2 gpm). Higher maximum day demand values for the system have been reported in the past (114,400 gpd (79.4 gpm) in 2013). A retest of Well 6 could be conducted using the installed well appurtenance once the well is in operation to demonstrate a higher yield for this well if needed.

LEGGETTE, BRASHEARS & GRAHAM, INC.

Stacy Stueber, CPG
Associate/Hydrogeologist

Reviewed by:

Thomas P. Cusack, CPG
Senior Vice President

Nv
August 17, 2016
H:\American Water Co\Wild Oaks\2016\Final PT report Aug 2016.docx

FIGURE

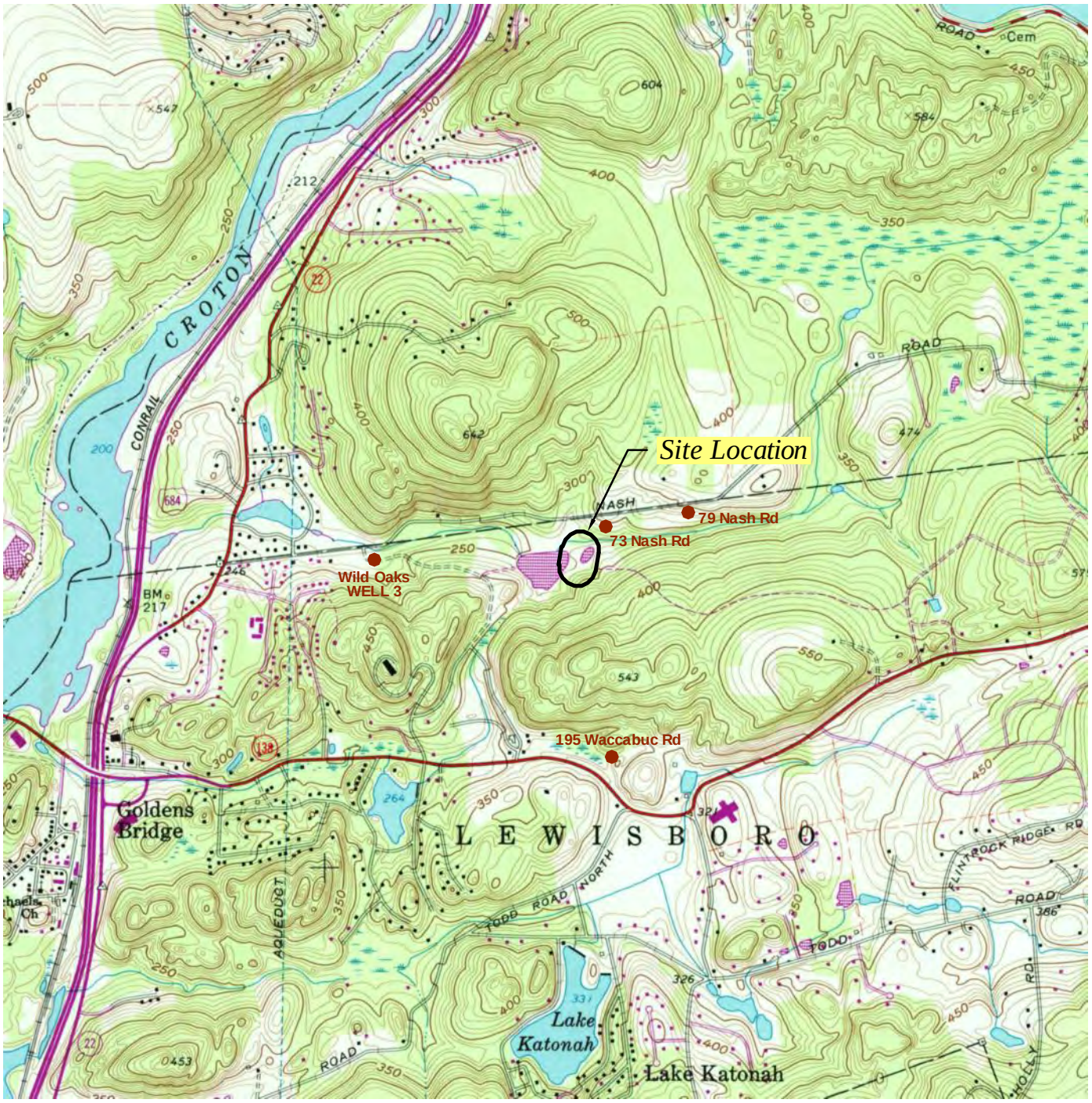

SOURCE: USGS TOPOGRAPHIC QUADRANGLE CROTON FALLS, NEW YORK (PHOTOREVISED 1981).

LEGEND

LOCATION OF EXISTING WELL FIELD EASEMENT

73 Nash Rd — APPROXIMATE LOCATION OF OFFSITE WELL MONITORED DURING 72-HOUR PUMPING TEST

QUADRANGLE LOCATION

0 2000

SCALE IN FEET

NEW YORK AMERICAN WATER
WILD OAKS WATER SYSTEM
LEWISBORO, NEW YORK

SITE LOCATION MAP AND OFFSITE WELL MONITORING PROGRAM

DATE	REVISED	PREPARED BY:			
		LBG ENGINEERING SERVICES, P.C. Professional Environmental and Civil Engineers 4 Research Drive Suite 204 Shelton, Connecticut 06484 (203) 929-8555			
DRAWN:	RAC	CHECKED:	SS	DATE: 07/26/16	FIGURE: 1

O:\DWG\Wild Oaks\2016\Fig1.dwg, Layout1, 7/26/2016 8:01:45 AM, AcroPlot.pc3

APPENDIX I

WCDH – WELL SITE APPROVALS

Westchester
[redacted]ov.com

Robert P. Astorino
County Executive

Sherlita Amler, M.D.
Commissioner of Health

September 17, 2014

LBG Engineering Services, P.C.
4 Research Drive
Suite 301
Shelton, CT 06484
Attn: William Beckman, P.E.

RE: Log No.: C14-021
Approval of Plans for
Well Construction
Wild Oaks PWS
Lewisboro (T)
Westchester County

Dear Mr. Beckman:

Enclosed is an Approval of Plans for Public Water Supply Improvement issued this day and approved plans prepared by you consisting of two (2) sheets, for the above referenced project. This approval is issued pursuant to 10NYCRR Part 5, Subpart 5-1, Section 5-1.22 and Chapter 873, Article VII, Section 873.707.1, of the Laws of Westchester County.

The Approval of Plans for Public Water Supply Improvement and approved plans should be filed in the appropriate office of the Town of Lewisboro. The applicant is obligated to comply with each of the conditions stipulated in this Approval of Plans for Public Water Supply Improvement.

Supervision of the construction by a licensed and registered professional engineer in the State of New York who will furnish a certificate of construction compliance to the Westchester County Department of Health (WCDOH)is a responsibility of the applicant.

The certificate of construction compliance, including two (2) sets of As-Built plans and results of acceptable microbiological, inorganic, organic and radiological analyses of water, and WCDOH Well Completion Report(s) must be forwarded promptly to this office after completion of construction. Please note that an Approval of Completed Works, issued by the Westchester County Department of Health, is required before this construction may be put into service.

This Approval of Plans and approved plans are limited to the construction of two (2) wells to serve Wild Oaks Public Water Supply with attention to condition (i) of the Approval of Plans.

Very truly yours,

Delroy Taylor, P.E.
Associate Engineer
Bureau of Environmental Quality

PK: rl
Enc.
cc: Richard Ruge, NY American Water
Peter Barrett - Building Inspector – Town of Lewisboro
John Dunn, P.E. – NYSDOH
Anna Stamm, P.E. - NYSDOH
Delroy Taylor, P.E. -WCDH
File

Department of Health
25 Moore Avenue
Mount Kisco, NY 10549 Telephone: (914) 813-5000 Fax: (914) 864-7341

REDUCE REUSE RECYCLE

NEW YORK STATE DEPARTMENT OF HEALTH
APPROVAL OF PLANS
FOR PUBLIC WATER SUPPLY IMPROVEMENT

THIS APPROVAL IS ISSUED UNDER THE PROVISIONS OF 10 NYCRR, PART 5, SUBPART 5-1, SECTION 5-1.22 AND CHAPTER 873, Article VII, Section 873.707.1 OF THE WESTCHESTER COUNTY SANITARY CODE

1.APPLICANT	2.LOCATION OF WORKS	3. COUNTY	4. WATER DISTRICT
Wild Oaks PWS – NY American Water	Lewisboro (T)	Westchester	Wild Oaks

5. TYPE OF PROJECT:

(x)1 Source
( )2 Transmission
( )3 Pumping Units
( )4 Chlorination
( )5 Fluoridation
( )6 Other Treatment
( )7 Distribution
( )8 Storage
( )9 Other

REMARKS:

By initiating improvement of the approved supply, the applicant accepts and agrees to abide by and conform with the following:

a. THAT the proposed wells(s) shall be constructed in complete conformity with the plans and specifications approved this day or approved amendments thereto.

b. THAT the proposed well(s)shall not be placed into service until such time as a Completed Works Approval is issued in accordance with Part 5 of the New York State Sanitary Code and Article VII, of the Westchester County Sanitary Code.

c. THAT the well(s) shall be constructed at the location(s) shown on the approved plans.

d. THAT the well(s)shall be constructed in compliance with all applicable provisions of 10NYCRR Part 5, Appendices 5-B and 5-D, Recommended Standards For Water Works, 2012 edition, Section 3.2, and American Water Works Association (AWWA) Standard A100-90.

e. THAT the well(s) shall be constructed with greater than 100 feet of casing below grade.

f. THAT the well(s) shall be disinfected in accordance with AWWA Standard C654-03.

g. THAT the well(s) shall be tested for yield for a duration specified in 10NYCRR Part 5, Appendix 5-D (Tabel2) typically 72 hours.

h. THAT the well(s) shall be tested for quality, i.e. - microbiological, inorganic, radiological, and organic (EPA Method 524. 2. MTBE and SOCs), for compliance with drinking water standards established in Part 5 of the New York State Sanitary Code.

i. THAT prior approval must be secured from this Department for installation of water service line(s), well pump(s) and connection of the well(s) to the public water supply system.

j. THAT supervision of construction be by a licensed and registered professional engineer in the State of New York who shall furnish a certificate of construction compliance and two (2) sets of As-Built plans after completion of well construction and connection of the well(s) to the public water supply system.

k. THAT this approval is valid for one (1) year.

ISSUED FOR THE STATE COMMISSIONER OF HEALTH

_____ P.E.

DATE

DESIGNATED REPRESENTATIVE
Delroy Taylor, P.E.
Associate Engineer
Bureau of Environmental Quality

GENERAL

6. Type of Ownership:

( )Municipal ( ) Commercial ( )68 Private Other ( )1 Authority ( )30 Interstate

( )Industrial (x) Water Works Corp. ( )Private Institutional ( )9 Federal ( )40 International

( )26 Board of Education ( )20 State ( )18 Indian Reservation

7. Estimated Total Cost	8. Population Served	9. Drainage Basin
$72,100	805	

10. Federal Aid Involved?	11. WSA Project?
( ) YES ( ) NO	( ) YES (X) NO

SOURCE

12.

SURFACE Name_____ Class _____

GROUND Name_____ Class _____

13. Estimated Source Development Cost

14. Safe Yield: GPD	15. Description

TREATMENT

16. Type of Treatment

( )1 Aeration ( )5 Clarifiers ( )9 Fluoridation

( )2 Microstrainers ( )6 Filtration ( )10 Softening

( )3 Mixing ( )7 Iron Removal ( )11 Corrosion Control

( )4 Sedimentation ( )8 Chlorination ( )12 Other

17. Name of Treatment Works	18. Max. Treat. Cap. GPD	19. Grade of Plant Operator Req.	20. Est. Cost $

21. Description:

DISTRIBUTION

22. Type of Project	23. Type of Storage	24. Est. Cost Distribution
( )1 Cross Connection ( )3 Transmission ( )2 Interconnection ( )4 Fire Pump Chl.	Elevated _____gal. Underground _____gal.	$

25. Anticipated Distribution	26. Designed For Fire Flow
System Demand: Avg. 0.053 MGD Max. 0.1144 MGD	(X) YES ( ) NO

Westchester gov.com

Robert P. Astorino
County Executive

Sherlita Amler, M.D.
Commissioner of Health

October 6, 2015

LBG Engineering Services, P.C.
4 Research Drive
Suite 301
Shelton, CT 06484
Attn: William Beckman, P.E.

RE: Log No.: C15-031
Approval of Plans for
Well Construction
Wild Oaks PWS
Lewisboro (T)
Westchester County

Dear Mr. Beckman:

Enclosed is an Approval of Plans for Public Water Supply Improvement issued this day and approved plans prepared by you consisting of two (2) sheets, for the above referenced project. This approval is issued pursuant to 10NYCRR Part 5, Subpart 5-1, Section 5-1.22 and Chapter 873, Article VII, Section 873.707.1, of the Laws of Westchester County.

The Approval of Plans for Public Water Supply Improvement and approved plans should be filed in the appropriate office of the Town of Lewisboro. The applicant is obligated to comply with each of the conditions stipulated in this Approval of Plans for Public Water Supply Improvement.

Supervision of the construction by a licensed and registered professional engineer in the State of New York who will furnish a certificate of construction compliance to the Westchester County Department of Health (WCDOH)is a responsibility of the applicant.

The certificate of construction compliance, including two (2) sets of As-Built plans and results of acceptable microbiological, inorganic, organic and radiological analyses of water, and WCDOH Well Completion Report(s) must be forwarded promptly to this office after completion of construction. Please note that an Approval of Completed Works, issued by the Westchester County Department of Health, is required before this construction may be put into service.

This Approval of Plans and approved plans are limited to the construction of two (2) wells to serve Wild Oaks Public Water Supply with attention to condition (i) of the Approval of Plans.

Very truly yours,

Delroy Taylor, P.E.
Associate Engineer
Bureau of Environmental Quality

DT: rl
Enc.
cc: Richard Ruge, NY American Water
Peter Barrett - Building Inspector – Town of Lewisboro
John Dunn, P.E. – NYSDOH
File

Department of Health
25 Moore Avenue
Mount Kisco, NY 10549 Telephone: (914) 864-7333 Fax: (914) 864-7341

REDUCE REUSE RECYCLE

NEW YORK STATE DEPARTMENT OF HEALTH
APPROVAL OF PLANS
FOR PUBLIC WATER SUPPLY IMPROVEMENT

THIS APPROVAL IS ISSUED UNDER THE PROVISIONS OF 10 NYCRR, PART 5, SUBPART 5-1, SECTION 5-1.22 AND CHAPTER 873, Article VII, Section 873.707.1 OF THE WESTCHESTER COUNTY SANITARY CODE

1.APPLICANT	2.LOCATION OF WORKS	3. COUNTY	4. WATER DISTRICT
Wild Oaks PWS – NY American Water	Lewisboro (T)	Westchester	Wild Oaks

5. TYPE OF PROJECT:

(x)1 Source
( )2 Transmission
( )3 Pumping Units
( )4 Chlorination
( )5 Fluoridation
( )6 Other Treatment
( )7 Distribution
( )8 Storage
( )9 Other

REMARKS:

By initiating improvement of the approved supply, the applicant accepts and agrees to abide by and conform with the following:

a. THAT the proposed wells(s) shall be constructed in complete conformity with the plans and specifications approved this day or approved amendments thereto.

b. THAT the proposed well(s)shall not be placed into service until such time as a Completed Works Approval is issued in accordance with Part 5 of the New York State Sanitary Code and Article VII, of the Westchester County Sanitary Code.

c. THAT the well(s) shall be constructed at the location(s) shown on the approved plans.

d. THAT the well(s)shall be constructed in compliance with all applicable provisions of 10NYCRR Part 5, Appendices 5-B and 5-D, Recommended Standards For Water Works, 2012 edition, Section 3.2, and American Water Works Association (AWWA) Standard A100-90.

e. THAT the well(s) shall be constructed with greater than 100 feet of casing below grade.

f. THAT the well(s) shall be disinfected in accordance with AWWA Standard C654-03.

g. THAT the well(s) shall be tested for yield for a duration specified in 10NYCRR Part 5, Appendix 5-D (Tabel2) typically 72 hours.

h. THAT the well(s) shall be tested for quality, i.e. - microbiological, inorganic, radiological, and organic (EPA Method 524. 2, MTBE and SOCs), for compliance with drinking water standards established in Part 5 of the New York State Sanitary Code.

i. THAT prior approval must be secured from this Department for installation of water service line(s), well pump(s) and connection of the well(s) to the public water supply system.

j. THAT supervision of construction be by a licensed and registered professional engineer in the State of New York who shall furnish a certificate of construction compliance and two (2) sets of As-Built plans after completion of well construction and connection of the well(s) to the public water supply system.

k. THAT this approval is valid for one (1) year.

ISSUED FOR THE STATE COMMISSIONER OF HEALTH

_____ _____ P.E.
DATE DESIGNATED REPRESENTATIVE
Delroy Taylor, P.E.
Associate Engineer
Bureau of Environmental Quality

APPENDIX II

WELL COMPLETION REPORTS

WIDOE No. 04

NEW YORK STATE DEPARTMENT OF ENVIRONMENTAL CONSERVATION

(1) COUNTY WESTCHESTER

(2) TOWN

(3) DEC Well Number

WATER WELL COMPLETION REPORT

(4) OWNER
NY AMERICAN WATER

(5) ADDRESS
60 BROOKLYN AVE. MERRICK, NY

(6) LOCATION OF WELL (See Instructions On Reverse) ☐ Check here if address is same as above
NASH RD. LEWISBORO, NY

(7) LATITUDE/LONGITUDE AND METHOD USED ☐ GPS ☐ Map

(8) TAX MAP NO.

(9) DEPTH OF WELL BELOW LAND SURFACE (feet) 425'

(10) DEPTH TO GROUNDWATER BELOW LAND SURFACE (feet) 0 DATE MEASURED 1/21/15

CASINGS

(11) DIAMETER	12" in.	8" in.	in.	in.
(12) LENGTH	54' ft.	104' ft.	ft.	ft.

(13) GROUT TYPE / SEALING: BENSEAL

(14) GROUT / SEALING INTERVAL (feet) FROM 0 TO 104'

SCREENS

(15) MAKE & MATERIAL

(16) OPENINGS

(17) DIAMETER	in.	in.	in.	in.
(18) LENGTH	ft.	ft.	ft.	ft.

(19) DEPTH TO TOP OF SCREEN, FROM TOP OF CASING (Feet)

YIELD TEST

(20) DATE 1/21/15

(21) DURATION OF TEST 6 Hrs

(22) LIFT METHOD ☐ Pump ☒ Air Lift ☐ Bailer

(23) STABILIZED DISCHARGE (GPM) 100+

(24) STATIC LEVEL PRIOR TO TEST (feet/inches below top of casing)

(25) MAXIMUM DRAWDOWN (Estimated) (feet/inches below top of casing)

(26) RECOVERY (Time in hours/minutes)

(27) Was the water pumped during the test discharged away from immediate area? Yes ____ No ____

PUMP INSTALLATION

(28) PUMP INSTALLED? YES ____ NO ____

(29) DATE

(30) CERTIFIED PUMP INSTALLER

(31) TYPE

(32) MAKE

(33) MODEL

(34) MAXIMUM CAPACITY (GPM)

(35) PUMP INSTALLATION LEVEL FROM TOP OF CASING (Feet)

DRILLER INFORMATION

(36) METHOD OF DRILLING ☐ Rotary ☐ Cable Tool ☐ Other Hammer

(37) USE OF WATER (See Instructions for choices)

(38) DATE DRILLING WORK STARTED 1/5/15

(39) DATE DRILLING WORK COMPLETED 1/20/15

(40) DATE REPORT FILED 1/5/15

(41) REGISTERED COMPANY Northern Drilling Inc

(42) DEC REGISTRATION NO. NYRD 12177

(43) CERTIFIED DRILLER (Print name) Mark Wilkinson

(44) CERTIFIED DRILLER SIGNATURE * Mark Wilkinson

* By signing this document I hereby affirm that: (1) I am certified to supervise water well drilling activities as defined by Environmental Conservation Law 15-1502; (2) this water well was constructed in accordance with water well standards promulgated by the New York State Department of Health; (3) under the penalty of perjury the information provided in this Well Completion Report is true, accurate and complete, and I understand that any false statement made herein is punishable as a Class A Misdemeanor under Penal Law §210.45.

10/2013

(45) WELL LOG

Depth to Bedrock 54' (ft. below land surface)

Ground Elevation _____ (ft. above sea level)

Top of Casing 18" (ft. above (+) or below (-) land surface)

TOP OF WELL

0'

BED BOULDER 54'

54'

DRILL & DRIVE 12" TOP SHELL GRAVEL & BOULDER

12" DRIVE SHOE

SET 12" AT 54'

DRILLED DOWN TO 104' & SET 8" GROUTED BACK TO TOP OF WELL FROM 104'

8" DRIVE SHOE

FRACTURE 100+ GPM

385'

385'

DRILL DOWN TO 425' 6" HOLE & OPEN 8" TO POLL OUT WELL TO BOTTOM

425'

BOTTOM OF HOLE

NYSDEC

Wild Oak Well # 5

NEW YORK STATE DEPARTMENT OF ENVIRONMENTAL CONSERVATION

(1) COUNTY

(2) TOWN

WATER WELL COMPLETION REPORT

(3) DEC Well Number

(4) OWNER: NY AMERICAN WATER

(5) ADDRESS: 60 BROOKLYN AVE. MERRICK, NY

(6) LOCATION OF WELL (See Instructions On Reverse) (Check here ☐ if address is same as above): WILD OAKS WELL 5

(7) LATITUDE/LONGITUDE AND METHOD USED: ☒ GPS ☐ Map 41.18-258'N 073 39.384'W

(8) TAX MAP NO.

(9) DEPTH OF WELL BELOW LAND SURFACE (feet): 465'

(10) DEPTH TO GROUNDWATER BELOW LAND SURFACE (feet): 10' DATE MEASURED: 5-7-15

CASINGS

(11) DIAMETER	12" in.	8" in.	6" in.	in.
(12) LENGTH	55' ft.	70' ft.	84' ft.	ft.

(13) GROUT TYPE / SEALING: BEN SEAL

(14) GROUT / SEALING INTERVAL (feet) FROM 0' TO 84'

SCREENS

(15) MAKE & MATERIAL

(16) OPENINGS

(17) DIAMETER	in.	in.	in.	in.
(18) LENGTH	ft.	ft.	ft.	ft.

(19) DEPTH TO TOP OF SCREEN, FROM TOP OF CASING (Feet)

YIELD TEST

(20) DATE: 5-5-15

(21) DURATION OF TEST: 5 HR

(22) LIFT METHOD: ☐ Pump ☒ Air Lift ☐ Bailer

(23) STABILIZED DISCHARGE (GPM): 50 to 70

(24) STATIC LEVEL PRIOR TO TEST (feet/inches below top of casing)

(25) MAXIMUM DRAWDOWN (Stabilized) (feet/inches below top of casing)

(26) RECOVERY (Time in hours/minutes)

(27) Was this water produced during this test discharged away from immediate area? Yes ____ No ____

PUMP INSTALLATION

(28) PUMP INSTALLED? YES ____ NO ____

(29) DATE

(30) CERTIFIED PUMP INSTALLER

(31) TYPE

(32) MAKE

(33) MODEL

(34) MAXIMUM CAPACITY (GPM)

(35) PUMP INSTALLATION LEVEL FROM TOP OF CASING (Feet)

DRILLER INFORMATION

(36) METHOD OF DRILLING: ☐ Rotary ☐ Cable Tool ☒ Other Hammer

(37) USE OF WATER (See instructions for choices)

(38) DATE DRILLING WORK STARTED

(39) DATE DRILLING WORK COMPLETED: 5-5-15

(40) DATE REPORT FILED

(41) REGISTERED COMPANY: NORTHERN DRILLING INC

(42) DEC REGISTRATION NO.: NYRD 10177

(43) CERTIFIED DRILLER (Print name): MARK TURNOUIL

(44) CERTIFIED DRILLER SIGNATURE*: Mark Turnouil

* By signing this document I hereby affirm that: (1) I am certified to supervise water well drilling activities as defined by Environmental Conservation Law 15-1502; (2) this water well was constructed in accordance with water well standards promulgated by the New York State Department of Health; (3) under the penalty of perjury the information provided in this Well Completion Report is true, accurate and complete, and I understand that any false statement made herein is punishable as a Class A Misdemeanor under Penal Law §210.45.

(45) WELL LOG

Depth to Bedrock 70' (ft. below land surface)

Ground Elevation 321' (ft. above sea level)

Top of Casing 18" (ft. above (+) or below (-) land surface)

TOP OF WELL

0	12" CASING TOP DOWN BUT DRILLED DRIVE 12"
55'	
12" DRIVE SHOE	DRILLED OUT 8" TO 70' GROUT BETWEEN 8" & 12" 2' AT A TIME
8" DRIVE SHOE	DRILL OUT BOTTOM OF 8" BEN SEAL DRIVE 6" TO 84
6" DRIVE SHOE	GROUT UP BETWEEN 6" & 8" CASING
356'	55 FRACTURE ROCK GROUT TO 356'
	BLT CUT BACK AFTER A WHILE
465'	

BOTTOM OF HOLE

NYSDEC

NEW YORK STATE DEPARTMENT OF ENVIRONMENTAL CONSERVATION

WATER WELL COMPLETION REPORT

(1) COUNTY: Westchester

(2) TOWN: North Salem

(3) DEC Well Number: WE 6813

(4) OWNER: NY America Water

(5) ADDRESS: 60 Brooklyn Ave Merrick NY 11566

(6) LOCATION OF WELL (See Instructions On Reverse): Nash Road Lewisboro NY (Check here ☐ if address is same as above) 10560

(7) LATITUDE/LONGTIUDE AND METHOD USED: ☐ GPS ☑ Map

(8) TAX MAP NO.: 31.1 Block 1 Lot 39

(9) DEPTH OF WELL BELOW LAND SURFACE (feet): 420

(10) DEPTH TO GROUNDWATER BELOW LAND SURFACE (feet): 420 DATE MEASURED: 5-17-16

CASINGS

(11) DIAMETER	8 in.	12 in.	in. / in.
(12) LENGTH	100 ft.	38 ft.	ft. / in.

(13) GROUT TYPE / SEALING: Bentonite dry granular

(14) GROUT / SEALING INTERVAL (feet) FROM 38 TO surface

SCREENS

(15) MAKE & MATERIAL			
(16) OPENINGS			
(17) DIAMETER	in.	in.	in. / in.
(18) LENGTH	ft.	ft.	ft. / in.

DEPTH TO TOP OF SCREEN, FROM TOP OF CASING (Feet)

YIELD TEST

(20) DATE: 5-17-16

(21) DURATION OF TEST: 1 hr.

(22) LIFT METHOD: ☐ Pump ☑ Air Lift ☐ Bailer

(23) STABILIZED DISCHARGE (GPM): 60

(24) STATIC LEVEL PRIOR TO TEST (feet/inches below top of casing)

(25) MAXIMUM DRAWDOWN (Stabilized) (feet/inches below top of casing)

(26) RECOVERY (Time in hours/minutes)

(27) Was the water produced during the test discharged away from immediate area? Yes ✓ No ____

PUMP INSTALLATION

(28) PUMP INSTALLED? YES ____ NO ____

(29) DATE

(30) PUMP INSTALLER

(31) TYPE

(32) MAKE

(33) MODEL

(34) MAXIMUM CAPACITY (GPM)

(35) PUMP INSTALLATION LEVEL FROM TOP OF CASING (Feet)

DRILLER INFORMATION

(36) METHOD OF DRILLING: ☑ Rotary ☐ Cable Tool ☐ Other

(37) USE OF WATER (See instructions for choices): domestic

(38) DATE DRILLING WORK STARTED: 5-12-16

(39) DATE DRILLING WORK COMPLETED: 5-17-16

(40) DATE REPORT FILED: 7-28-16

(41) REGISTERED COMPANY: Freywell Drilling

(42) DEC REGISTRATION NO. NYRD 10009

(43) CERTIFIED DRILLER (Print name): William Frey

(44) CERTIFIED DRILLER SIGNATURE *: William Frey

* By signing this document I hereby affirm that (1) I am certified to supervise water well drilling activities as defined by Environmental Conservation Law 15-1502; (2) this water well was constructed in accordance with water well standards promulgated by the New York State Department of Health; (3) under the penalty of perjury the information provided in this Well Completion Report is true, accurate and complete, and I understand that any false statement made herein is punishable as a Class A Misdemeanor under Penal Law §210.45.

09/2010

(45) WELL LOG

Depth to Bedrock 98 (ft. below land surface)

Ground Elevation _____ (ft. above sea level)

Top of Casing 2 (ft. above (+) or below (-) land surface)

TOP OF WELL

48	broken rock
50	solid rock
50-320	gray, red pink Metamorphized granite
320-340	pure white
340	gray
378	water quartzite
420	total depth

BOTTOM OF HOLE

NYSDEC

LOCATION SKETCH - Indicate north

APPENDIX III

PUMPING WELLS

PUMPING WELLS

WELL 4

NEW YORK AMERICAN WATER COMPANY
WILD OAKS WATER SYSTEM
LEWISBORO, NEW YORK

Hydrograph of Water-Level Measurements Collected from Well 4 During 72-Hour Pumping Test Conducted on Well 4 from May 26 Through May 30, 2015

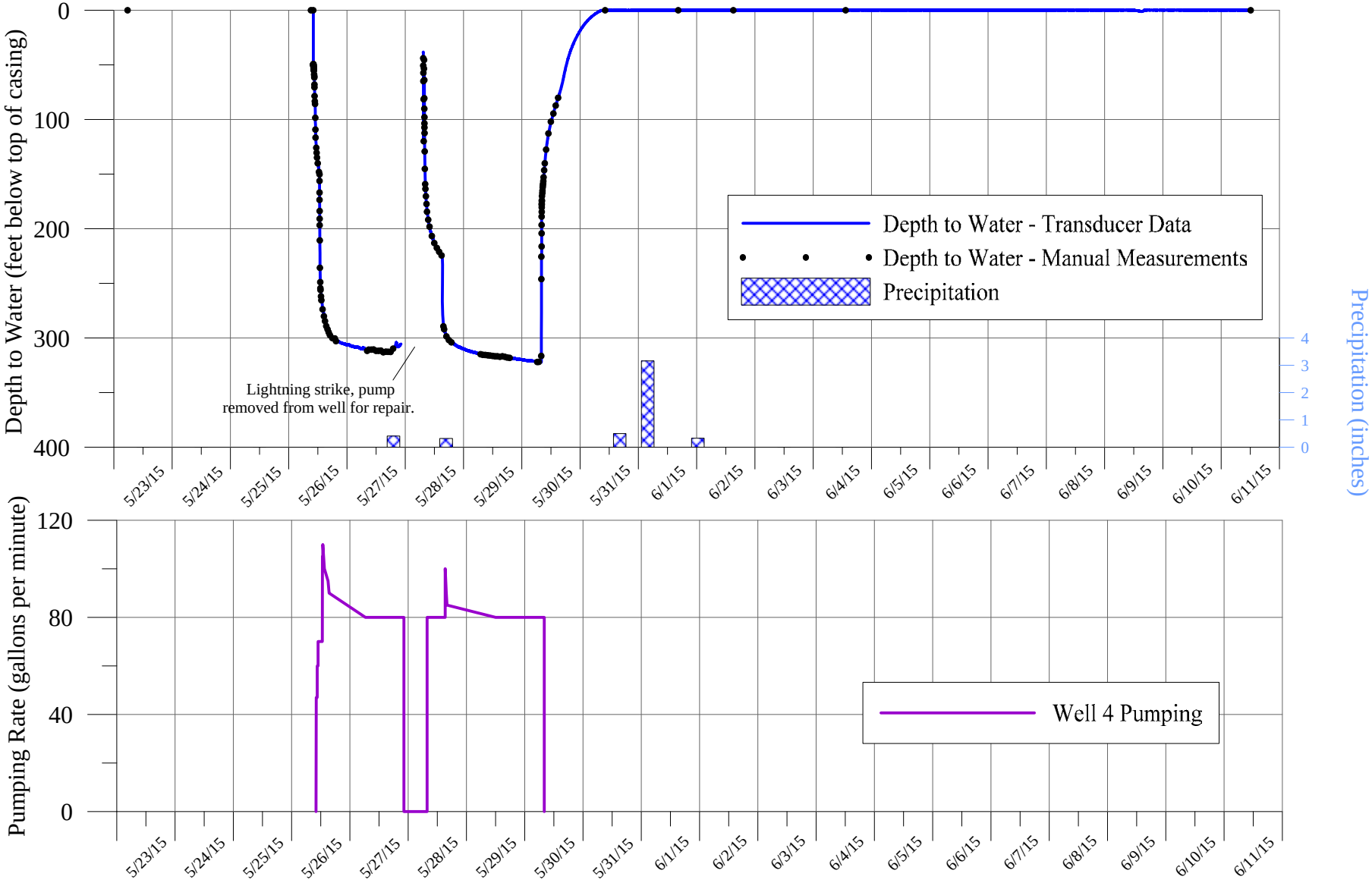

K:\Jobs\American Water Co\Wild Oak\72-Hour Pumping Test (May 2015)\Hydrographs\Well 4 clippedgrf

LEGGETTE, BRASHEARS & GRAHAM, INC.

NEW YORK AMERICAN WATER COMPANY
WILD OAKS WATER SYSTEM
LEWISBORO, NEW YORK

Hydrograph of Water-Level Measurements Collected from Well 4 During 72-Hour Pumping Test Program Conducted on Well 4 and Well 5 from May 18 Through May 30, 2015

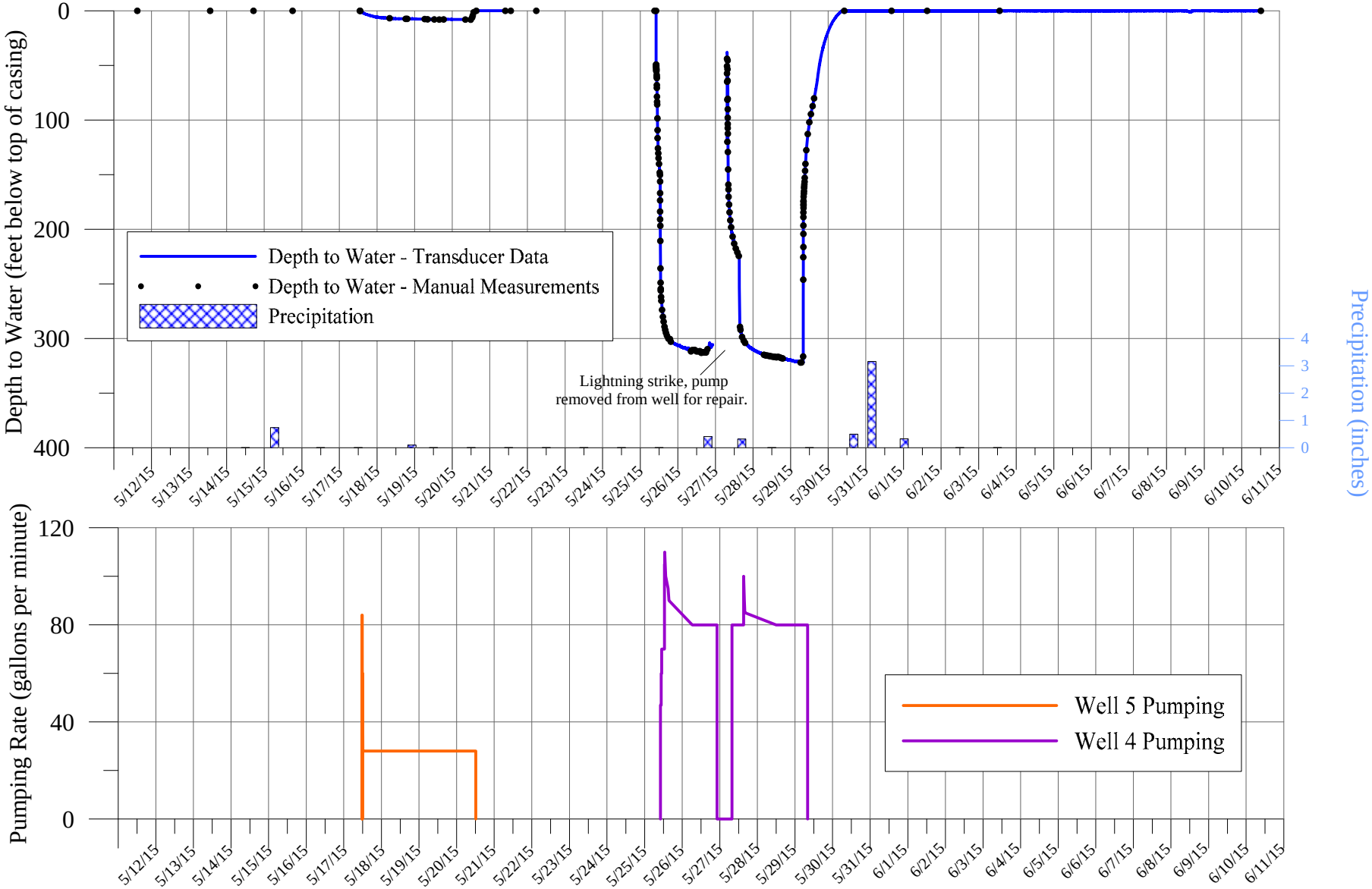

K:\Jobs\American Water Co\Wild Oak\72-Hour Pumping Test (May 2015)\Hydrographs\Well4.grf

LEGGETTE, BRASHEARS & GRAHAM, INC.

NEW YORK AMERICAN WATER COMPANY
WILD OAKS WATER SYSTEM
LEWISBORO, NEW YORK

Summary of Water-Level Measurements Collected from Well 4 During
72-Hour Pumping Tests Conducted on Wells 4 and 5, May 18 Through May 30, 2015

Date	Time	Depth to Water (ft btoc)	Elapsed Time (min)	Drawdown (feet)	Comments
5/12/2015	15:00	0.00	--	0.00	Prior to start of pumping in Well 5, Well 4 was flowing artesian.
5/14/2015	13:27	0.00	--	0.00	
5/15/2015	17:14	0.00	--	0.00	
5/16/2015	18:07	0.00	--	0.00	
5/18/2015	13:06	0.00	--	0.00	Pumping in Well 5 started at 11:38.
5/18/2015	13:17	0.16	--	0.16	Well 4 no longer flowing, pressure transducer installed in well.
5/18/2015	14:00	0.87	--	0.87	
5/18/2015	15:00	1.78	--	1.78	
5/18/2015	16:00	2.51	--	2.51	
5/18/2015	17:00	3.10	--	3.10	
5/18/2015	18:00	3.60	--	3.60	
5/18/2015	19:00	4.03	--	4.03	
5/18/2015	20:00	4.44	--	4.44	
5/18/2015	21:00	4.81	--	4.81	
5/18/2015	22:00	5.18	--	5.18	
5/18/2015	23:00	5.47	--	5.47	
5/19/2015	0:00	5.73	--	5.73	
5/19/2015	1:00	5.93	--	5.93	
5/19/2015	2:00	6.12	--	6.12	
5/19/2015	3:00	6.22	--	6.22	
5/19/2015	4:00	6.34	--	6.34	
5/19/2015	5:00	6.41	--	6.41	
5/19/2015	6:00	6.49	--	6.49	
5/19/2015	7:00	6.62	--	6.62	
5/19/2015	8:00	6.73	--	6.73	
5/19/2015	9:00	6.85	--	6.85	
5/19/2015	10:00	6.95	--	6.95	
5/19/2015	11:00	7.08	--	7.08	
5/19/2015	12:00	7.15	--	7.15	
5/19/2015	13:00	7.23	--	7.23	
5/19/2015	14:00	7.26	--	7.26	
5/19/2015	15:00	7.23	--	7.23	
5/19/2015	16:00	7.21	--	7.21	
5/19/2015	17:00	7.19	--	7.19	
5/19/2015	18:00	7.16	--	7.16	
5/19/2015	19:00	7.15	--	7.15	
5/19/2015	20:00	7.15	--	7.15	
5/19/2015	21:00	7.18	--	7.18	
5/19/2015	22:00	7.26	--	7.26	
5/19/2015	23:00	7.30	--	7.30	
5/20/2015	0:00	7.37	--	7.37	
5/20/2015	1:00	7.40	--	7.40	
5/20/2015	2:00	7.47	--	7.47	
5/20/2015	3:00	7.45	--	7.45	
5/20/2015	4:00	7.45	--	7.45	
5/20/2015	5:00	7.43	--	7.43	
5/20/2015	6:00	7.44	--	7.44	
5/20/2015	7:00	7.45	--	7.45	
5/20/2015	8:00	7.51	--	7.51	
5/20/2015	9:00	7.58	--	7.58	
5/20/2015	10:00	7.65	--	7.65	
5/20/2015	11:00	7.72	--	7.72	
5/20/2015	12:00	7.74	--	7.74	
5/20/2015	13:00	7.80	--	7.80	
5/20/2015	14:00	7.84	--	7.84	
5/20/2015	15:00	7.79	--	7.79	
5/20/2015	16:00	7.78	--	7.78	

NEW YORK AMERICAN WATER COMPANY
WILD OAKS WATER SYSTEM
LEWISBORO, NEW YORK

Summary of Water-Level Measurements Collected from Well 4 During
72-Hour Pumping Tests Conducted on Wells 4 and 5, May 18 Through May 30, 2015

Date	Time	Depth to Water (ft btoc)	Elapsed Time (min)	Drawdown (feet)	Comments
5/20/2015	17:00	7.75	--	7.75	
5/20/2015	18:00	7.71	--	7.71	
5/20/2015	19:00	7.68	--	7.68	
5/20/2015	20:00	7.68	--	7.68	
5/20/2015	21:00	7.69	--	7.69	
5/20/2015	22:00	7.73	--	7.73	
5/20/2015	23:00	7.76	--	7.76	
5/21/2015	0:00	7.82	--	7.82	
5/21/2015	1:00	7.85	--	7.85	
5/21/2015	2:00	7.89	--	7.89	
5/21/2015	3:00	7.88	--	7.88	
5/21/2015	4:00	7.88	--	7.88	
5/21/2015	5:00	7.88	--	7.88	
5/21/2015	6:00	7.87	--	7.87	
5/21/2015	7:00	7.85	--	7.85	
5/21/2015	8:00	7.86	--	7.86	
5/21/2015	9:00	7.88	--	7.88	
5/21/2015	10:00	7.91	--	7.91	
5/21/2015	11:00	7.95	--	7.95	
5/21/2015	12:00	8.03	--	8.03	Pump in Well 5 shut down at 12:14.
5/21/2015	13:00	4.67	--	4.67	
5/21/2015	14:00	0.00	--	0.00	Well 4 flowing artesian.
5/21/2015	15:00	0.00	--	0.00	
5/21/2015	16:00	0.00	--	0.00	
5/21/2015	17:00	0.00	--	0.00	
5/21/2015	18:00	0.00	--	0.00	
5/21/2015	19:00	0.00	--	0.00	
5/21/2015	20:00	0.00	--	0.00	
5/21/2015	21:00	0.00	--	0.00	
5/21/2015	22:00	0.00	--	0.00	
5/21/2015	23:00	0.00	--	0.00	
5/22/2015	0:00	0.00	--	0.00	
5/22/2015	1:00	0.00	--	0.00	
5/22/2015	2:00	0.00	--	0.00	
5/22/2015	3:00	0.00	--	0.00	
5/22/2015	4:00	0.00	--	0.00	
5/22/2015	5:00	0.00	--	0.00	
5/22/2015	6:00	0.00	--	0.00	
5/22/2015	7:00	0.00	--	0.00	
5/22/2015	8:00	0.00	--	0.00	Well 4 flowing artesian.
5/22/2015	9:00	0.00	--	0.00	Transducer removed from Well 4.
5/26/2015	9:13	0.00	--	0.00	Transducer reinstalled in Well 4.
5/26/2015	10:00	0.00	--	0.00	
5/26/2015	10:05	0.00	--	0.00	
5/26/2015	10:06	0.00	--	0.00	
5/26/2015	10:07	0.00	--	0.00	
5/26/2015	10:08	1.90	1	1.90	Pump in Well 4 started.
5/26/2015	10:09	45.46	2	45.46	Pumping rate 47 gpm.
5/26/2015	10:10	49.30	3	49.30	
5/26/2015	10:11	48.40	4	48.40	
5/26/2015	10:12	48.36	5	48.36	
5/26/2015	10:13	48.38	6	48.38	
5/26/2015	10:14	48.93	7	48.93	
5/26/2015	10:15	49.53	8	49.53	
5/26/2015	10:16	50.09	9	50.09	
5/26/2015	10:17	50.76	10	50.76	
5/26/2015	10:18	51.29	11	51.29	Pumping rate 47 gpm.

NEW YORK AMERICAN WATER COMPANY
WILD OAKS WATER SYSTEM
LEWISBORO, NEW YORK

Summary of Water-Level Measurements Collected from Well 4 During
72-Hour Pumping Tests Conducted on Wells 4 and 5, May 18 Through May 30, 2015

Date	Time	Depth to Water (ft btoc)	Elapsed Time (min)	Drawdown (feet)	Comments
5/26/2015	10:19	52.05	12	52.05	Pumping rate 47 gpm.
5/26/2015	10:20	52.58	13	52.58	
5/26/2015	10:21	53.25	14	53.25	
5/26/2015	10:22	53.52	15	53.52	
5/26/2015	10:23	54.26	16	54.26	
5/26/2015	10:24	54.87	17	54.87	
5/26/2015	10:25	55.55	18	55.55	
5/26/2015	10:30	57.54	23	57.54	Pumping rate 47 gpm.
5/26/2015	10:35	59.84	28	59.84	Pumping rate increased to 60 gpm.
5/26/2015	10:40	72.28	33	72.28	
5/26/2015	10:45	79.73	38	79.73	
5/26/2015	10:50	83.74	43	83.74	
5/26/2015	10:55	86.70	48	86.70	Pumping rate increased to 70 gpm.
5/26/2015	11:00	101.55	53	101.55	
5/26/2015	11:10	116.77	63	116.77	Pumping rate 70 gpm.
5/26/2015	11:20	123.57	73	123.57	Pumping rate 70 gpm.
5/26/2015	11:30	128.26	83	128.26	Pumping rate 70 gpm.
5/26/2015	11:40	132.34	93	132.34	Pumping rate 70 gpm.
5/26/2015	11:50	135.90	103	135.90	Pumping rate 70 gpm.
5/26/2015	12:00	139.02	113	139.02	Pumping rate increased to 105 gpm at 12:42.
5/26/2015	13:00	244.20	173	244.20	Pumping rate increased to 110 gpm at 12:50.
5/26/2015	14:00	272.37	233	272.37	Pumping rate 100 gpm.
5/26/2015	15:00	283.21	293	283.21	Pumping rate 95 gpm.
5/26/2015	16:00	290.80	353	290.80	Pumping rate 90 gpm.
5/26/2015	17:00	295.85	413	295.85	Pumping rate 90 gpm.
5/26/2015	18:00	299.33	473	299.33	Pumping rate 90 gpm.
5/26/2015	19:00	300.77	533	300.77	Pumping rate 90 gpm.
5/26/2015	20:00	302.24	593	302.24	Pumping rate 90 gpm.
5/26/2015	21:00	303.87	653	303.87	Pumping rate 90 gpm.
5/26/2015	22:00	304.73	713	304.73	Pumping rate 85 gpm.
5/26/2015	23:00	305.44	773	305.44	Pumping rate 85 gpm.
5/27/2015	0:00	306.19	833	306.19	Pumping rate 85 gpm.
5/27/2015	1:00	306.51	893	306.51	Pumping rate 85 gpm.
5/27/2015	2:00	307.60	953	307.60	Pumping rate 85 gpm.
5/27/2015	3:00	307.99	1013	307.99	Pumping rate 85 gpm.
5/27/2015	4:00	308.25	1073	308.25	Pumping rate 85 gpm.
5/27/2015	5:00	308.58	1133	308.58	Pumping rate 85 gpm.
5/27/2015	6:00	309.65	1193	309.65	Pumping rate 85 gpm.
5/27/2015	7:00	309.48	1253	309.48	Pumping rate 80 gpm.
5/27/2015	8:29	312.17	1342	312.17	Pumping rate 80 gpm.
5/27/2015	9:00	310.84	1373	310.84	Pumping rate 80 gpm.
5/27/2015	10:00	311.33	1433	311.33	Pumping rate 80 gpm.
5/27/2015	11:00	311.25	1493	311.25	Pumping rate 80 gpm.
5/27/2015	12:00	312.31	1553	312.31	Pumping rate 80 gpm.
5/27/2015	13:00	312.29	1613	312.29	Pumping rate 80 gpm.
5/27/2015	14:00	312.31	1673	312.31	Pumping rate 80 gpm.
5/27/2015	15:00	313.30	1733	313.30	Pumping rate 80 gpm.
5/27/2015	16:00	313.17	1793	313.17	Pumping rate 80 gpm.
5/27/2015	17:00	313.21	1853	313.21	Pumping rate 80 gpm.
5/27/2015	18:00	313.31	1913	313.31	Pumping rate 80 gpm.
5/27/2015	19:00	310.74	1973	310.74	Pumping rate 80 gpm.
5/27/2015	20:00	307.07	2033	307.07	Lightning strike, pump motor damaged.
5/27/2015	21:00	308.12	2093	308.12	
5/27/2015	22:00	306.03	2153	306.03	
5/27/2015	22:15	--	2168	--	Generator shut down, pump pulled from well.
5/28/2015	7:25	38.31	2878	38.31	Pump motor replaced, pump and transducer reinstalled.
5/28/2015	7:26	38.26	2879	38.26	Pump in Well 4 restarted.

NEW YORK AMERICAN WATER COMPANY
WILD OAKS WATER SYSTEM
LEWISBORO, NEW YORK

Summary of Water-Level Measurements Collected from Well 4 During
72-Hour Pumping Tests Conducted on Wells 4 and 5, May 18 Through May 30, 2015

Date	Time	Depth to Water (ft btoc)	Elapsed Time (min)	Drawdown (feet)	Comments
5/28/2015	7:27	45.35	2880	45.35	Pumping rate 80 gpm.
5/28/2015	7:28	54.38	2881	54.38	Pumping rate 80 gpm.
5/28/2015	7:29	60.30	2882	60.30	Pumping rate 80 gpm.
5/28/2015	7:30	64.14	2883	64.14	Pumping rate 80 gpm.
5/28/2015	8:00	121.19	2913	121.19	Pumping rate 80 gpm.
5/28/2015	9:00	183.65	2973	183.65	Pumping rate 80 gpm.
5/28/2015	10:00	198.46	3033	198.46	Pumping rate 80 gpm.
5/28/2015	11:00	206.93	3093	206.93	Pumping rate 80 gpm.
5/28/2015	12:00	213.16	3153	213.16	Pumping rate 80 gpm.
5/28/2015	13:00	217.78	3213	217.78	Pumping rate 80 gpm.
5/28/2015	14:00	221.37	3273	221.37	Pumping rate 70 gpm.
5/28/2015	15:00	223.88	3333	223.88	Manual rate increase completed.
5/28/2015	16:00	292.18	3393	292.18	Pumping rate 90 gpm.
5/28/2015	17:00	298.24	3453	298.24	Pumping rate 85 gpm.
5/28/2015	18:00	301.76	3513	301.76	Pumping rate 85 gpm.
5/28/2015	19:00	303.70	3573	303.70	Pumping rate 85 gpm.
5/28/2015	20:00	305.41	3633	305.41	Pumping rate 85 gpm.
5/28/2015	21:00	306.89	3693	306.89	Pumping rate 85 gpm.
5/28/2015	22:00	308.00	3753	308.00	Pumping rate 85 gpm.
5/28/2015	23:00	309.09	3813	309.09	Pumping rate 85 gpm.
5/29/2015	0:00	309.84	3873	309.84	Pumping rate 85 gpm.
5/29/2015	1:00	311.04	3933	311.04	Pumping rate 85 gpm.
5/29/2015	2:00	311.73	3993	311.73	Pumping rate 85 gpm.
5/29/2015	3:00	312.44	4053	312.44	Pumping rate 85 gpm.
5/29/2015	4:00	313.07	4113	313.07	Pumping rate 85 gpm.
5/29/2015	5:00	313.59	4173	313.59	Pumping rate 85 gpm.
5/29/2015	6:00	314.17	4233	314.17	Pumping rate 85 gpm.
5/29/2015	7:00	314.77	4293	314.77	Pumping rate 85 gpm.
5/29/2015	8:00	315.13	4353	315.13	Pumping rate 85 gpm.
5/29/2015	9:00	315.50	4413	315.50	Pumping rate 85 gpm.
5/29/2015	10:00	315.75	4473	315.75	Pumping rate 85 gpm.
5/29/2015	11:00	315.96	4533	315.96	Pumping rate 85 gpm.
5/29/2015	12:00	316.38	4593	316.38	Pumping rate 80 gpm.
5/29/2015	13:00	316.58	4653	316.58	Pumping rate 80 gpm.
5/29/2015	14:00	316.79	4713	316.79	Pumping rate 80 gpm.
5/29/2015	15:00	316.97	4773	316.97	Pumping rate 80 gpm.
5/29/2015	16:00	316.50	4833	316.50	Pumping rate 80 gpm.
5/29/2015	17:00	317.18	4893	317.18	Pumping rate 80 gpm.
5/29/2015	18:00	317.76	4953	317.76	Pumping rate 80 gpm.
5/29/2015	19:00	318.38	5013	318.38	Pumping rate 80 gpm.
5/29/2015	20:00	318.38	5073	318.38	Pumping rate 80 gpm.
5/29/2015	21:00	318.75	5133	318.75	Pumping rate 80 gpm.
5/29/2015	22:00	319.33	5193	319.33	Pumping rate 80 gpm.
5/29/2015	23:00	319.41	5253	319.41	Pumping rate 80 gpm.
5/30/2015	0:00	319.73	5313	319.73	Pumping rate 80 gpm.
5/30/2015	1:00	320.10	5373	320.10	Pumping rate 80 gpm.
5/30/2015	2:00	320.61	5433	320.61	Pumping rate 80 gpm.
5/30/2015	3:00	320.73	5493	320.73	Pumping rate 80 gpm.
5/30/2015	4:00	320.97	5553	320.97	Pumping rate 80 gpm.
5/30/2015	5:00	321.11	5613	321.11	Pumping rate 80 gpm.
5/30/2015	6:00	321.67	5673	321.67	Pumping rate 80 gpm.
5/30/2015	7:00	321.75	5733	321.75	Pumping rate 80 gpm.
5/30/2015	8:00	321.93	5793	321.93	Pumping rate 80 gpm.
5/30/2015	8:01	321.74	5794	321.74	Pumping rate 80 gpm.
5/30/2015	8:02	316.73	--	316.73	Pump in Well 4 shut down.
5/30/2015	8:03	296.50	--	296.50	
5/30/2015	8:04	277.34	--	277.34	

NEW YORK AMERICAN WATER COMPANY
WILD OAKS WATER SYSTEM
LEWISBORO, NEW YORK

Summary of Water-Level Measurements Collected from Well 4 During
72-Hour Pumping Tests Conducted on Wells 4 and 5, May 18 Through May 30, 2015

Date	Time	Depth to Water (ft btoc)	Elapsed Time (min)	Drawdown (feet)	Comments
5/30/2015	8:05	259.32	--	259.32	
5/30/2015	8:06	242.72	--	242.72	
5/30/2015	8:07	227.97	--	227.97	
5/30/2015	8:08	215.27	--	215.27	
5/30/2015	8:09	204.74	--	204.74	
5/30/2015	8:10	196.09	--	196.09	
5/30/2015	8:11	189.31	--	189.31	
5/30/2015	8:12	184.22	--	184.22	
5/30/2015	8:13	180.54	--	180.54	
5/30/2015	8:14	177.98	--	177.98	
5/30/2015	8:15	176.23	--	176.23	
5/30/2015	8:16	174.89	--	174.89	
5/30/2015	8:17	173.86	--	173.86	
5/30/2015	8:18	172.90	--	172.90	
5/30/2015	8:19	172.08	--	172.08	
5/30/2015	8:20	171.44	--	171.44	
5/30/2015	8:25	168.55	--	168.55	
5/30/2015	8:30	166.04	--	166.04	
5/30/2015	8:35	163.82	--	163.82	
5/30/2015	8:40	161.62	--	161.62	
5/30/2015	8:45	159.59	--	159.59	
5/30/2015	8:50	157.55	--	157.55	
5/30/2015	8:55	155.51	--	155.51	
5/30/2015	9:00	153.46	--	153.46	
5/30/2015	9:10	149.13	--	149.13	
5/30/2015	9:20	144.48	--	144.48	
5/30/2015	9:30	139.86	--	139.86	
5/30/2015	9:40	135.68	--	135.68	
5/30/2015	9:50	131.84	--	131.84	
5/30/2015	10:00	128.43	--	128.43	
5/30/2015	11:00	113.17	--	113.17	
5/30/2015	12:00	102.77	--	102.77	
5/30/2015	13:00	94.42	--	94.42	
5/30/2015	14:00	87.02	--	87.02	
5/30/2015	15:00	80.10	--	80.10	
5/30/2015	16:00	72.51	--	72.51	
5/30/2015	17:00	63.61	--	63.61	
5/30/2015	18:00	53.20	--	53.20	
5/30/2015	19:00	44.56	--	44.56	
5/30/2015	20:00	37.62	--	37.62	
5/30/2015	21:00	31.87	--	31.87	90% water-level recovery
5/30/2015	22:00	26.89	--	26.89	
5/30/2015	23:00	22.58	--	22.58	
5/31/2015	0:00	18.70	--	18.70	
5/31/2015	1:00	15.25	--	15.25	
5/31/2015	2:00	12.22	--	12.22	
5/31/2015	3:00	9.62	--	9.62	
5/31/2015	4:00	7.42	--	7.42	
5/31/2015	5:00	5.37	--	5.37	
5/31/2015	6:00	3.64	--	3.64	
5/31/2015	7:00	2.17	--	2.17	
5/31/2015	8:00	0.86	--	0.86	
5/31/2015	9:00	0.10	--	0.10	
5/31/2015	10:00	0.00	--	0.00	Well 4 flowing artesian.
5/31/2015	11:00	0.00	--	0.00	
5/31/2015	12:00	0.00	--	0.00	
5/31/2015	13:00	0.00	--	0.00	

NEW YORK AMERICAN WATER COMPANY
WILD OAKS WATER SYSTEM
LEWISBORO, NEW YORK

Summary of Water-Level Measurements Collected from Well 4 During
72-Hour Pumping Tests Conducted on Wells 4 and 5, May 18 Through May 30, 2015

Date	Time	Depth to Water (ft btoc)	Elapsed Time (min)	Drawdown (feet)	Comments
5/31/2015	14:00	0.00	--	0.00	
5/31/2015	15:00	0.00	--	0.00	
5/31/2015	16:00	0.00	--	0.00	
5/31/2015	17:00	0.00	--	0.00	
5/31/2015	18:00	0.00	--	0.00	
5/31/2015	19:00	0.00	--	0.00	
5/31/2015	20:00	0.00	--	0.00	
5/31/2015	21:00	0.00	--	0.00	
5/31/2015	22:00	0.00	--	0.00	
5/31/2015	23:00	0.00	--	0.00	
6/1/2015	0:00	0.00	--	0.00	
6/1/2015	1:00	0.00	--	0.00	
6/1/2015	2:00	0.00	--	0.00	
6/1/2015	3:00	0.00	--	0.00	
6/1/2015	4:00	0.00	--	0.00	
6/1/2015	5:00	0.00	--	0.00	
6/1/2015	6:00	0.00	--	0.00	
6/1/2015	7:00	0.00	--	0.00	
6/1/2015	8:00	0.00	--	0.00	
6/1/2015	9:00	0.00	--	0.00	
6/1/2015	10:00	0.00	--	0.00	
6/1/2015	11:00	0.00	--	0.00	
6/1/2015	12:00	0.00	--	0.00	
6/1/2015	13:00	0.00	--	0.00	
6/1/2015	14:00	0.00	--	0.00	
6/1/2015	15:00	0.00	--	0.00	
6/1/2015	16:00	0.00	--	0.00	
6/1/2015	17:00	0.00	--	0.00	
6/1/2015	18:00	0.00	--	0.00	
6/1/2015	19:00	0.00	--	0.00	
6/1/2015	20:00	0.00	--	0.00	
6/1/2015	21:00	0.00	--	0.00	
6/1/2015	22:00	0.00	--	0.00	
6/1/2015	23:00	0.00	--	0.00	
6/2/2015	0:00	0.00	--	0.00	
6/2/2015	1:00	0.00	--	0.00	
6/2/2015	2:00	0.00	--	0.00	
6/2/2015	3:00	0.00	--	0.00	
6/2/2015	4:00	0.00	--	0.00	
6/2/2015	5:00	0.00	--	0.00	
6/2/2015	6:00	0.00	--	0.00	
6/2/2015	7:00	0.00	--	0.00	
6/2/2015	8:00	0.00	--	0.00	
6/2/2015	9:00	0.00	--	0.00	
6/2/2015	10:00	0.00	--	0.00	
6/2/2015	11:00	0.00	--	0.00	
6/2/2015	12:00	0.00	--	0.00	
6/2/2015	13:00	0.00	--	0.00	
6/2/2015	14:00	0.00	--	0.00	
6/2/2015	15:00	0.00	--	0.00	
6/2/2015	16:00	0.00	--	0.00	
6/2/2015	17:00	0.00	--	0.00	
6/2/2015	18:00	0.00	--	0.00	
6/2/2015	19:00	0.00	--	0.00	
6/2/2015	20:00	0.00	--	0.00	
6/2/2015	21:00	0.00	--	0.00	
6/2/2015	22:00	0.00	--	0.00	

NEW YORK AMERICAN WATER COMPANY
WILD OAKS WATER SYSTEM
LEWISBORO, NEW YORK

Summary of Water-Level Measurements Collected from Well 4 During
72-Hour Pumping Tests Conducted on Wells 4 and 5, May 18 Through May 30, 2015

Date	Time	Depth to Water (ft btoc)	Elapsed Time (min)	Drawdown (feet)	Comments
6/2/2015	23:00	0.00	--	0.00	
6/3/2015	0:00	0.00	--	0.00	
6/3/2015	1:00	0.00	--	0.00	
6/3/2015	2:00	0.00	--	0.00	
6/3/2015	3:00	0.00	--	0.00	
6/3/2015	4:00	0.00	--	0.00	
6/3/2015	5:00	0.00	--	0.00	
6/3/2015	6:00	0.00	--	0.00	
6/3/2015	7:00	0.00	--	0.00	
6/3/2015	8:00	0.00	--	0.00	
6/3/2015	9:00	0.00	--	0.00	
6/3/2015	10:00	0.00	--	0.00	
6/3/2015	11:00	0.00	--	0.00	
6/3/2015	12:00	0.00	--	0.00	
6/3/2015	13:00	0.00	--	0.00	
6/3/2015	14:00	0.00	--	0.00	
6/3/2015	15:00	0.00	--	0.00	
6/3/2015	16:00	0.00	--	0.00	
6/3/2015	17:00	0.00	--	0.00	
6/3/2015	18:00	0.00	--	0.00	
6/3/2015	19:00	0.00	--	0.00	
6/3/2015	20:00	0.00	--	0.00	
6/3/2015	21:00	0.00	--	0.00	
6/3/2015	22:00	0.00	--	0.00	
6/3/2015	23:00	0.00	--	0.00	
6/4/2015	0:00	0.00	--	0.00	
6/4/2015	1:00	0.00	--	0.00	
6/4/2015	2:00	0.00	--	0.00	
6/4/2015	3:00	0.00	--	0.00	
6/4/2015	4:00	0.00	--	0.00	
6/4/2015	5:00	0.00	--	0.00	
6/4/2015	6:00	0.00	--	0.00	
6/4/2015	7:00	0.00	--	0.00	
6/4/2015	8:00	0.00	--	0.00	
6/4/2015	9:00	0.00	--	0.00	
6/4/2015	10:00	0.00	--	0.00	
6/4/2015	11:00	0.00	--	0.00	
6/4/2015	12:00	0.00	--	0.00	
6/4/2015	13:00	0.00	--	0.00	
6/4/2015	14:00	0.00	--	0.00	
6/4/2015	15:00	0.00	--	0.00	
6/4/2015	16:00	0.00	--	0.00	
6/4/2015	17:00	0.00	--	0.00	
6/4/2015	18:00	0.00	--	0.00	
6/4/2015	19:00	0.00	--	0.00	
6/4/2015	20:00	0.00	--	0.00	
6/4/2015	21:00	0.00	--	0.00	
6/4/2015	22:00	0.00	--	0.00	
6/4/2015	23:00	0.00	--	0.00	
6/5/2015	0:00	0.00	--	0.00	
6/5/2015	1:00	0.00	--	0.00	
6/5/2015	2:00	0.00	--	0.00	
6/5/2015	3:00	0.00	--	0.00	
6/5/2015	4:00	0.00	--	0.00	
6/5/2015	5:00	0.00	--	0.00	
6/5/2015	6:00	0.00	--	0.00	
6/5/2015	7:00	0.00	--	0.00	

NEW YORK AMERICAN WATER COMPANY
WILD OAKS WATER SYSTEM
LEWISBORO, NEW YORK

Summary of Water-Level Measurements Collected from Well 4 During
72-Hour Pumping Tests Conducted on Wells 4 and 5, May 18 Through May 30, 2015

Date	Time	Depth to Water (ft btoc)	Elapsed Time (min)	Drawdown (feet)	Comments
6/5/2015	8:00	0.00	--	0.00	
6/5/2015	9:00	0.00	--	0.00	
6/5/2015	10:00	0.00	--	0.00	
6/5/2015	11:00	0.00	--	0.00	
6/5/2015	12:00	0.00	--	0.00	
6/5/2015	13:00	0.00	--	0.00	
6/5/2015	14:00	0.00	--	0.00	
6/5/2015	15:00	0.00	--	0.00	
6/5/2015	16:00	0.00	--	0.00	
6/5/2015	17:00	0.00	--	0.00	
6/5/2015	18:00	0.00	--	0.00	
6/5/2015	19:00	0.00	--	0.00	
6/5/2015	20:00	0.00	--	0.00	
6/5/2015	21:00	0.00	--	0.00	
6/5/2015	22:00	0.00	--	0.00	
6/5/2015	23:00	0.00	--	0.00	
6/6/2015	0:00	0.00	--	0.00	
6/6/2015	1:00	0.00	--	0.00	
6/6/2015	2:00	0.00	--	0.00	
6/6/2015	3:00	0.00	--	0.00	
6/6/2015	4:00	0.00	--	0.00	
6/6/2015	5:00	0.00	--	0.00	
6/6/2015	6:00	0.00	--	0.00	
6/6/2015	7:00	0.00	--	0.00	
6/6/2015	8:00	0.00	--	0.00	
6/6/2015	9:00	0.00	--	0.00	
6/6/2015	10:00	0.00	--	0.00	
6/6/2015	11:00	0.00	--	0.00	
6/6/2015	12:00	0.00	--	0.00	
6/6/2015	13:00	0.00	--	0.00	
6/6/2015	14:00	0.00	--	0.00	
6/6/2015	15:00	0.00	--	0.00	
6/6/2015	16:00	0.00	--	0.00	
6/6/2015	17:00	0.00	--	0.00	
6/6/2015	18:00	0.00	--	0.00	
6/6/2015	19:00	0.00	--	0.00	
6/6/2015	20:00	0.00	--	0.00	
6/6/2015	21:00	0.00	--	0.00	
6/6/2015	22:00	0.00	--	0.00	
6/6/2015	23:00	0.00	--	0.00	
6/7/2015	0:00	0.00	--	0.00	
6/7/2015	1:00	0.00	--	0.00	
6/7/2015	2:00	0.00	--	0.00	
6/7/2015	3:00	0.00	--	0.00	
6/7/2015	4:00	0.00	--	0.00	
6/7/2015	5:00	0.00	--	0.00	
6/7/2015	6:00	0.00	--	0.00	
6/7/2015	7:00	0.00	--	0.00	
6/7/2015	8:00	0.00	--	0.00	
6/7/2015	9:00	0.00	--	0.00	
6/7/2015	10:00	0.00	--	0.00	
6/7/2015	11:00	0.00	--	0.00	
6/7/2015	12:00	0.00	--	0.00	
6/7/2015	13:00	0.00	--	0.00	
6/7/2015	14:00	0.00	--	0.00	
6/7/2015	15:00	0.00	--	0.00	
6/7/2015	16:00	0.00	--	0.00	

NEW YORK AMERICAN WATER COMPANY
WILD OAKS WATER SYSTEM
LEWISBORO, NEW YORK

Summary of Water-Level Measurements Collected from Well 4 During
72-Hour Pumping Tests Conducted on Wells 4 and 5, May 18 Through May 30, 2015

Date	Time	Depth to Water (ft btoc)	Elapsed Time (min)	Drawdown (feet)	Comments
6/7/2015	17:00	0.00	--	0.00	
6/7/2015	18:00	0.00	--	0.00	
6/7/2015	19:00	0.00	--	0.00	
6/7/2015	20:00	0.00	--	0.00	
6/7/2015	21:00	0.00	--	0.00	
6/7/2015	22:00	0.00	--	0.00	
6/7/2015	23:00	0.00	--	0.00	
6/8/2015	0:00	0.00	--	0.00	
6/8/2015	1:00	0.00	--	0.00	
6/8/2015	2:00	0.00	--	0.00	
6/8/2015	3:00	0.00	--	0.00	
6/8/2015	4:00	0.00	--	0.00	
6/8/2015	5:00	0.00	--	0.00	
6/8/2015	6:00	0.00	--	0.00	
6/8/2015	7:00	0.00	--	0.00	
6/8/2015	8:00	0.00	--	0.00	
6/8/2015	9:00	0.00	--	0.00	
6/8/2015	10:00	0.00	--	0.00	
6/8/2015	11:00	0.00	--	0.00	
6/8/2015	12:00	0.00	--	0.00	
6/8/2015	13:00	0.00	--	0.00	
6/8/2015	14:00	0.00	--	0.00	
6/8/2015	15:00	0.00	--	0.00	
6/8/2015	16:00	0.00	--	0.00	
6/8/2015	17:00	0.00	--	0.00	
6/8/2015	18:00	0.00	--	0.00	
6/8/2015	19:00	0.00	--	0.00	
6/8/2015	20:00	0.00	--	0.00	
6/8/2015	21:00	0.00	--	0.00	
6/8/2015	22:00	0.00	--	0.00	
6/8/2015	23:00	0.00	--	0.00	
6/9/2015	0:00	0.00	--	0.00	
6/9/2015	1:00	0.00	--	0.00	
6/9/2015	2:00	0.00	--	0.00	
6/9/2015	3:00	0.00	--	0.00	
6/9/2015	4:00	0.00	--	0.00	
6/9/2015	5:00	0.00	--	0.00	
6/9/2015	6:00	0.00	--	0.00	
6/9/2015	7:00	0.00	--	0.00	
6/9/2015	8:00	0.00	--	0.00	
6/9/2015	9:00	0.00	--	0.00	
6/9/2015	10:00	0.00	--	0.00	
6/9/2015	11:00	0.00	--	0.00	
6/9/2015	12:00	0.00	--	0.00	
6/9/2015	13:00	0.00	--	0.00	
6/9/2015	14:00	0.00	--	0.00	
6/9/2015	15:00	0.00	--	0.00	
6/9/2015	16:00	0.00	--	0.00	
6/9/2015	17:00	0.00	--	0.00	
6/9/2015	18:00	0.00	--	0.00	
6/9/2015	19:00	0.00	--	0.00	
6/9/2015	20:00	0.00	--	0.00	
6/9/2015	21:00	0.00	--	0.00	
6/9/2015	22:00	0.00	--	0.00	
6/9/2015	23:00	0.00	--	0.00	
6/10/2015	0:00	0.00	--	0.00	
6/10/2015	1:00	0.00	--	0.00	

NEW YORK AMERICAN WATER COMPANY
WILD OAKS WATER SYSTEM
LEWISBORO, NEW YORK

Summary of Water-Level Measurements Collected from Well 4 During
72-Hour Pumping Tests Conducted on Wells 4 and 5, May 18 Through May 30, 2015

Date	Time	Depth to Water (ft btoc)	Elapsed Time (min)	Drawdown (feet)	Comments
6/10/2015	2:00	0.00	--	0.00	
6/10/2015	3:00	0.00	--	0.00	
6/10/2015	4:00	0.00	--	0.00	
6/10/2015	5:00	0.00	--	0.00	
6/10/2015	6:00	0.00	--	0.00	
6/10/2015	7:00	0.00	--	0.00	
6/10/2015	8:00	0.00	--	0.00	
6/10/2015	9:00	0.00	--	0.00	
6/10/2015	10:00	0.00	--	0.00	
6/10/2015	11:00	0.00	--	0.00	
6/10/2015	12:00	0.00	--	0.00	
6/10/2015	13:00	0.00	--	0.00	
6/10/2015	14:00	0.00	--	0.00	
6/10/2015	15:00	0.00	--	0.00	
6/10/2015	16:00	0.00	--	0.00	
6/10/2015	17:00	0.00	--	0.00	
6/10/2015	18:00	0.00	--	0.00	
6/10/2015	19:00	0.00	--	0.00	
6/10/2015	20:00	0.00	--	0.00	
6/10/2015	21:00	0.00	--	0.00	
6/10/2015	22:00	0.00	--	0.00	
6/10/2015	23:00	0.00	--	0.00	
6/11/2015	0:00	0.00	--	0.00	
6/11/2015	1:00	0.00	--	0.00	
6/11/2015	2:00	0.00	--	0.00	
6/11/2015	3:00	0.00	--	0.00	
6/11/2015	4:00	0.00	--	0.00	
6/11/2015	5:00	0.00	--	0.00	
6/11/2015	6:00	0.00	--	0.00	
6/11/2015	7:00	0.00	--	0.00	
6/11/2015	8:00	0.00	--	0.00	
6/11/2015	9:00	0.00	--	0.00	
6/11/2015	10:00	0.00	--	0.00	
6/11/2015	11:00	0.00	--	0.00	
6/11/2015	12:00	0.00	--	0.00	Pressure transducer removed from Well 4.

ft btoc feet below top of casing
gpm gallons per minute
min minutes

PUMPING WELLS

WELL 5

NEW YORK AMERICAN WATER COMPANY
WILD OAKS WATER SYSTEM
LEWISBORO, NEW YORK

Hydrograph of Water-Level Measurements Collected from Well 5 During 72-Hour Pumping Test Conducted on Well 5 from May 18 Through May 21, 2015

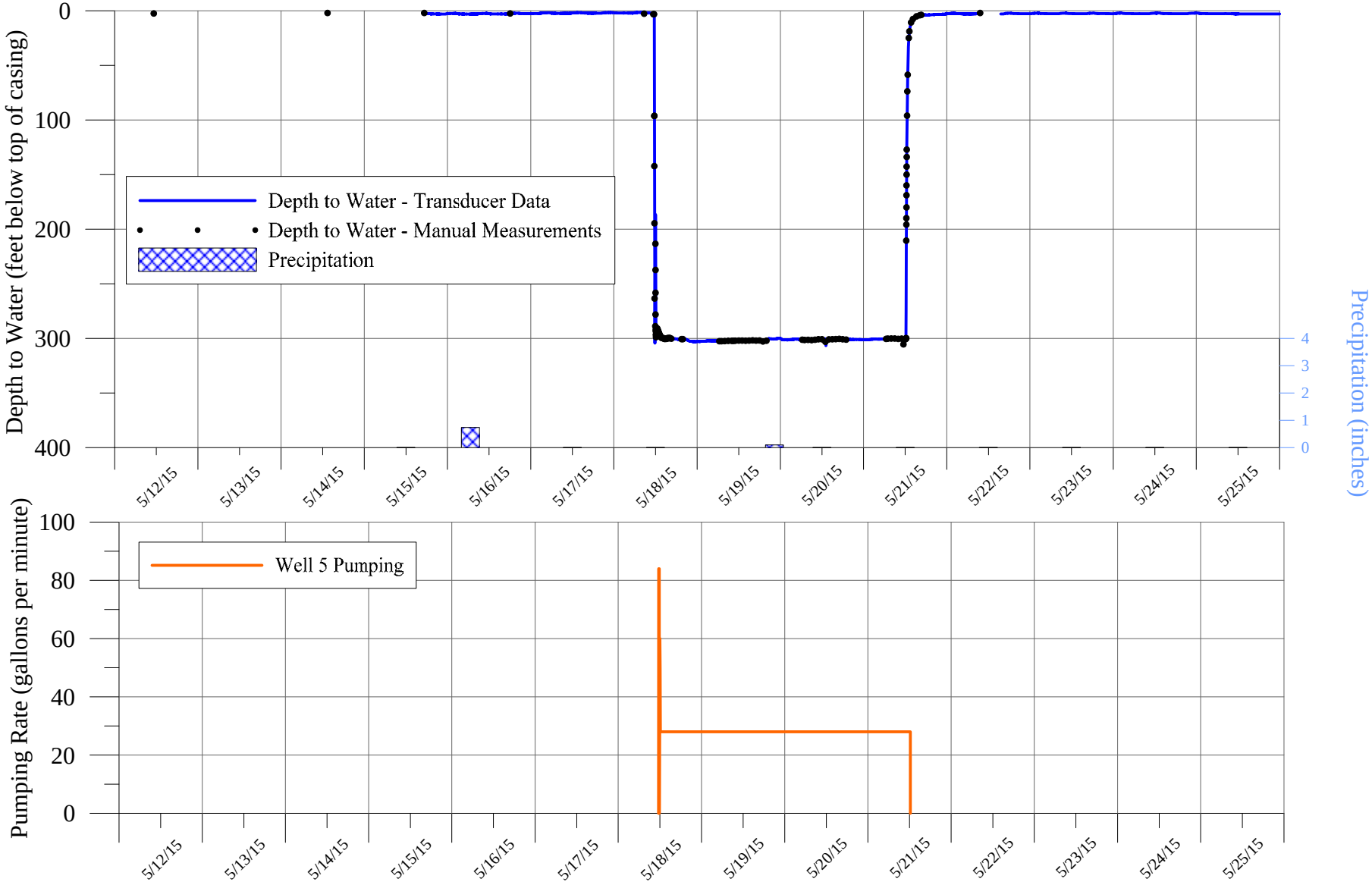

K:\Jobs\American Water Co\Wild Oak\72-Hour Pumping Test (May 2015)\Hydrographs\Well 5 clipped.grf

LEGGETTE, BRASHEARS & GRAHAM, INC.

NEW YORK AMERICAN WATER COMPANY
WILD OAKS WATER SYSTEM
LEWISBORO, NEW YORK

Hydrograph of Water-Level Measurements Collected from Well 5 During 72-Hour Pumping Test Program Conducted on Well 4 and Well 5 from May 18 Through May 30, 2015

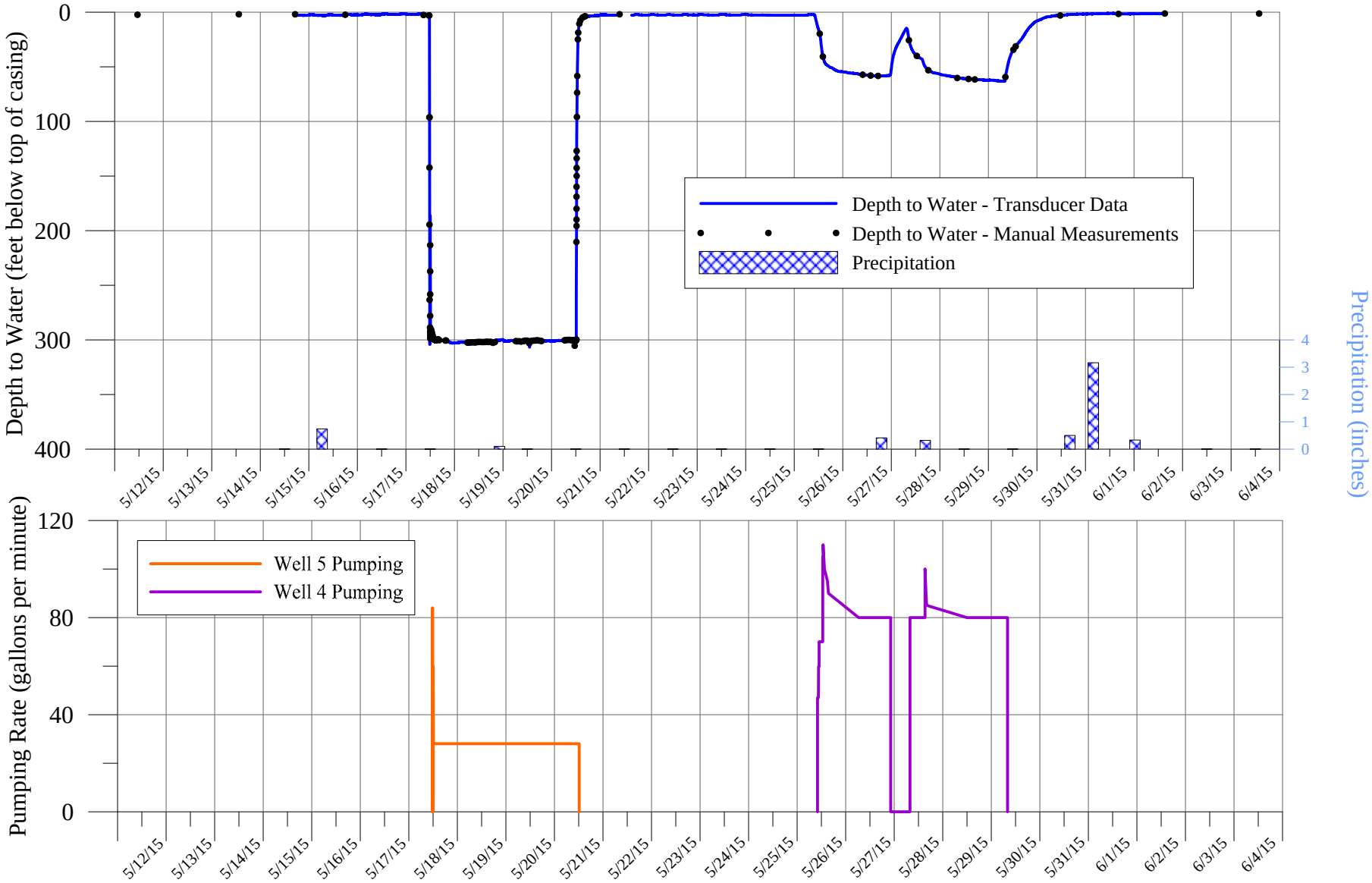

K:\Jobs\American Water Co\Wild Oak\72-Hour Pumping Test (May 2015)\Hydrographs\Well 5grf

LEGGETTE, BRASHEARS & GRAHAM, INC.

NEW YORK AMERICAN WATER COMPANY
WILD OAKS WATER SYSTEM
LEWISBORO, NEW YORK

Summary of Water-Level Measurements Collected from Well 5 During
72-Hour Pumping Tests Conducted on Wells 4 and 5, May 18 Through May 30, 2015

Date	Time	Depth to Water (ft btoc)	Elapsed Time (min)	Drawdown (feet)	Comments
5/15/2015	18:00	2.52	--	--	Pressure transducers installed in Well 5.
5/15/2015	19:00	2.71	--	--	
5/15/2015	20:00	2.78	--	--	
5/15/2015	21:00	2.87	--	--	
5/15/2015	22:00	2.92	--	--	
5/15/2015	23:00	2.94	--	--	
5/16/2015	0:00	2.56	--	--	
5/16/2015	1:00	2.41	--	--	
5/16/2015	2:00	2.29	--	--	
5/16/2015	3:00	2.68	--	--	
5/16/2015	4:00	2.80	--	--	
5/16/2015	5:00	2.90	--	--	
5/16/2015	6:00	2.92	--	--	
5/16/2015	7:00	3.00	--	--	
5/16/2015	8:00	3.03	--	--	
5/16/2015	9:00	2.66	--	--	
5/16/2015	10:00	2.45	--	--	
5/16/2015	11:00	2.36	--	--	
5/16/2015	12:00	2.65	--	--	
5/16/2015	13:00	2.79	--	--	
5/16/2015	14:00	2.83	--	--	
5/16/2015	15:00	2.85	--	--	
5/16/2015	16:00	2.76	--	--	
5/16/2015	17:00	2.83	--	--	
5/16/2015	18:00	2.47	--	--	
5/16/2015	19:00	2.19	--	--	
5/16/2015	20:00	2.12	--	--	
5/16/2015	21:00	2.48	--	--	
5/16/2015	22:00	2.57	--	--	
5/16/2015	23:00	2.64	--	--	
5/17/2015	0:00	2.62	--	--	
5/17/2015	1:00	2.57	--	--	
5/17/2015	2:00	2.55	--	--	
5/17/2015	3:00	2.12	--	--	
5/17/2015	4:00	1.91	--	--	
5/17/2015	5:00	1.72	--	--	
5/17/2015	6:00	2.07	--	--	
5/17/2015	7:00	2.19	--	--	
5/17/2015	8:00	2.22	--	--	
5/17/2015	9:00	2.31	--	--	
5/17/2015	10:00	2.35	--	--	
5/17/2015	11:00	2.34	--	--	
5/17/2015	12:00	1.94	--	--	
5/17/2015	13:00	1.74	--	--	
5/17/2015	14:00	1.59	--	--	
5/17/2015	15:00	1.92	--	--	
5/17/2015	16:00	2.00	--	--	
5/17/2015	17:00	2.05	--	--	
5/17/2015	18:00	2.10	--	--	
5/17/2015	19:00	2.12	--	--	
5/17/2015	20:00	2.14	--	--	
5/17/2015	21:00	1.77	--	--	
5/17/2015	22:00	1.58	--	--	
5/17/2015	23:00	1.53	--	--	
5/18/2015	0:00	1.82	--	--	
5/18/2015	1:00	1.98	--	--	
5/18/2015	2:00	2.03	--	--	

NEW YORK AMERICAN WATER COMPANY
WILD OAKS WATER SYSTEM
LEWISBORO, NEW YORK

Summary of Water-Level Measurements Collected from Well 5 During
72-Hour Pumping Tests Conducted on Wells 4 and 5, May 18 Through May 30, 2015

Date	Time	Depth to Water (ft btoc)	Elapsed Time (min)	Drawdown (feet)	Comments
5/18/2015	3:00	2.03	--	--	
5/18/2015	4:00	2.04	--	--	
5/18/2015	5:00	2.01	--	--	
5/18/2015	6:00	1.68	--	--	
5/18/2015	7:00	1.50	--	--	
5/18/2015	8:00	1.40	--	--	
5/18/2015	9:00	1.76	--	--	
5/18/2015	10:00	1.97	--	--	
5/18/2015	11:00	3.12	--	--	
5/18/2015	11:37	3.10	--	--	
5/18/2015	11:38	96.25	1	93.15	Pump in Well 5 started.
5/18/2015	11:39	96.25	2	93.15	Pumping rate 84 gpm.
5/18/2015	11:40	142.32	3	139.22	
5/18/2015	11:41	194.58	4	191.48	
5/18/2015	11:44	263.46	7	260.36	
5/18/2015	11:49	305.37	12	302.27	
5/18/2015	11:50	--	13	--	Pump shut down.
5/18/2015	11:58	288.85	21	285.75	
5/18/2015	11:59	187.63	22	184.53	
5/18/2015	12:00	213.27	23	210.17	Pump restarted.
5/18/2015	12:01	237.36	24	234.26	
5/18/2015	12:02	258.33	25	255.23	
5/18/2015	12:03	278.19	26	275.09	
5/18/2015	12:04	291.91	27	288.81	
5/18/2015	12:05	293.38	28	290.28	
5/18/2015	12:08	296.65	31	293.55	
5/18/2015	12:09	298.93	32	295.83	Pumping rate 28 gpm.
5/18/2015	12:12	298.05	35	294.95	
5/18/2015	12:13	296.09	36	292.99	
5/18/2015	12:14	295.50	37	292.40	
5/18/2015	12:15	294.50	38	291.40	Pumping rate 28 gpm.
5/18/2015	12:20	291.38	43	288.28	
5/18/2015	12:25	290.90	48	287.80	Pumping rate 28 gpm.
5/18/2015	12:30	290.85	53	287.75	
5/18/2015	12:35	291.58	58	288.48	Pumping rate 28 gpm.
5/18/2015	12:40	292.25	63	289.15	
5/18/2015	12:45	292.95	68	289.85	Pumping rate 28 gpm.
5/18/2015	12:55	294.33	73	291.23	Pumping rate 28 gpm.
5/18/2015	13:00	295.07	78	291.97	
5/18/2015	13:05	295.54	83	292.44	Pumping rate 28 gpm.
5/18/2015	13:10	296.50	88	293.40	
5/18/2015	13:15	297.05	93	293.95	Pumping rate 28 gpm.
5/18/2015	13:25	297.73	103	294.63	
5/18/2015	13:35	298.95	113	295.85	Pumping rate 28 gpm.
5/18/2015	13:45	299.57	123	296.47	Pumping rate 28 gpm.
5/18/2015	13:55	299.42	133	296.32	Pumping rate 28 gpm.
5/18/2015	14:00	300.60	138	297.50	Pumping rate 28 gpm.
5/18/2015	15:00	301.56	198	298.46	Pumping rate 28 gpm.
5/18/2015	16:00	300.93	258	297.83	Pumping rate 28 gpm.
5/18/2015	17:00	301.47	318	298.37	Pumping rate 28 gpm.
5/18/2015	18:00	301.58	378	298.48	Pumping rate 28 gpm.
5/18/2015	19:00	301.81	438	298.71	Pumping rate 28 gpm.
5/18/2015	20:00	300.61	498	297.51	Pumping rate 28 gpm.
5/18/2015	21:00	301.24	558	298.14	Pumping rate 28 gpm.
5/18/2015	22:00	302.51	618	299.41	Pumping rate 28 gpm.
5/18/2015	23:00	302.86	678	299.76	Pumping rate 28 gpm.
5/19/2015	0:00	302.84	738	299.74	Pumping rate 28 gpm.

NEW YORK AMERICAN WATER COMPANY
WILD OAKS WATER SYSTEM
LEWISBORO, NEW YORK

Summary of Water-Level Measurements Collected from Well 5 During
72-Hour Pumping Tests Conducted on Wells 4 and 5, May 18 Through May 30, 2015

Date	Time	Depth to Water (ft btoc)	Elapsed Time (min)	Drawdown (feet)	Comments
5/19/2015	1:00	302.64	798	299.54	Pumping rate 28 gpm.
5/19/2015	2:00	302.62	858	299.52	Pumping rate 28 gpm.
5/19/2015	3:00	302.07	918	298.97	Pumping rate 28 gpm.
5/19/2015	4:00	302.19	978	299.09	Pumping rate 28 gpm.
5/19/2015	5:00	302.20	1038	299.10	Pumping rate 28 gpm.
5/19/2015	6:00	302.14	1098	299.04	Pumping rate 28 gpm.
5/19/2015	7:00	302.28	1158	299.18	Pumping rate 28 gpm.
5/19/2015	8:00	302.17	1218	299.07	Pumping rate 28 gpm.
5/19/2015	9:00	302.13	1278	299.03	Pumping rate 28 gpm.
5/19/2015	10:00	302.18	1338	299.08	Pumping rate 28 gpm.
5/19/2015	11:00	301.98	1398	298.88	Pumping rate 28 gpm.
5/19/2015	12:00	301.78	1458	298.68	Pumping rate 28 gpm.
5/19/2015	13:00	301.74	1518	298.64	Pumping rate 28 gpm.
5/19/2015	14:00	302.00	1578	298.90	Pumping rate 28 gpm.
5/19/2015	15:00	301.72	1638	298.62	Pumping rate 28 gpm.
5/19/2015	16:00	301.68	1698	298.58	Pumping rate 28 gpm.
5/19/2015	17:00	301.70	1758	298.60	Pumping rate 28 gpm.
5/19/2015	18:00	302.02	1818	298.92	Pumping rate 28 gpm.
5/19/2015	19:00	301.81	1878	298.71	Pumping rate 28 gpm.
5/19/2015	20:00	300.97	1938	297.87	Pumping rate 28 gpm.
5/19/2015	21:00	300.25	1998	297.15	Pumping rate 28 gpm.
5/19/2015	22:00	300.48	2058	297.38	Pumping rate 28 gpm.
5/19/2015	23:00	300.14	2118	297.04	Pumping rate 28 gpm.
5/20/2015	0:00	300.01	2178	296.91	Pumping rate 28 gpm.
5/20/2015	1:00	301.28	2238	298.18	Pumping rate 28 gpm.
5/20/2015	2:00	301.34	2298	298.24	Pumping rate 28 gpm.
5/20/2015	3:00	300.98	2358	297.88	Pumping rate 28 gpm.
5/20/2015	4:00	300.72	2418	297.62	Pumping rate 28 gpm.
5/20/2015	5:00	300.65	2478	297.55	Pumping rate 28 gpm.
5/20/2015	6:00	301.47	2538	298.37	Pumping rate 28 gpm.
5/20/2015	7:00	301.43	2598	298.33	Pumping rate 28 gpm.
5/20/2015	8:00	301.29	2658	298.19	Pumping rate 28 gpm.
5/20/2015	9:00	301.50	2718	298.40	Pumping rate 28 gpm.
5/20/2015	10:00	300.96	2778	297.86	Pumping rate 28 gpm.
5/20/2015	11:00	300.61	2838	297.51	Pumping rate 28 gpm.
5/20/2015	12:00	300.67	2898	297.57	Pumping rate 28 gpm.
5/20/2015	13:00	302.94	2958	299.84	Pumping rate 28 gpm.
5/20/2015	14:00	300.84	3018	297.74	Pumping rate 28 gpm.
5/20/2015	15:00	300.64	3078	297.54	Pumping rate 28 gpm.
5/20/2015	16:00	300.71	3138	297.61	Pumping rate 28 gpm.
5/20/2015	17:00	300.37	3198	297.27	Pumping rate 28 gpm.
5/20/2015	18:00	300.77	3258	297.67	Pumping rate 28 gpm.
5/20/2015	19:00	300.98	3318	297.88	Pumping rate 28 gpm.
5/20/2015	20:00	300.93	3378	297.83	Pumping rate 28 gpm.
5/20/2015	21:00	300.91	3438	297.81	Pumping rate 28 gpm.
5/20/2015	22:00	300.95	3498	297.85	Pumping rate 28 gpm.
5/20/2015	23:00	300.94	3558	297.84	Pumping rate 28 gpm.
5/21/2015	0:00	301.23	3618	298.13	Pumping rate 28 gpm.
5/21/2015	1:00	301.11	3678	298.01	Pumping rate 28 gpm.
5/21/2015	2:00	300.87	3738	297.77	Pumping rate 28 gpm.
5/21/2015	3:00	300.64	3798	297.54	Pumping rate 28 gpm.
5/21/2015	4:00	300.72	3858	297.62	Pumping rate 28 gpm.
5/21/2015	5:00	300.62	3918	297.52	Pumping rate 28 gpm.
5/21/2015	6:00	300.51	3978	297.41	Pumping rate 28 gpm.
5/21/2015	7:00	300.14	4038	297.04	Pumping rate 28 gpm.
5/21/2015	8:00	300.08	4098	296.98	Pumping rate 28 gpm.
5/21/2015	9:00	300.03	4158	296.93	Pumping rate 28 gpm.

NEW YORK AMERICAN WATER COMPANY
WILD OAKS WATER SYSTEM
LEWISBORO, NEW YORK

Summary of Water-Level Measurements Collected from Well 5 During
72-Hour Pumping Tests Conducted on Wells 4 and 5, May 18 Through May 30, 2015

Date	Time	Depth to Water (ft btoc)	Elapsed Time (min)	Drawdown (feet)	Comments
5/21/2015	10:00	300.29	4218	297.19	Pumping rate 28 gpm.
5/21/2015	11:00	300.28	4278	297.18	Pumping rate 28 gpm.
5/21/2015	12:00	301.06	4338	297.96	Pumping rate 28 gpm.
5/21/2015	12:12	300.41	4350	297.31	Pumping rate 28 gpm.
5/21/2015	12:13	300.39	4351	297.29	Pumping rate 28 gpm.
5/21/2015	12:14	293.96	--	290.86	Pump in Well 5 shut down.
5/21/2015	12:15	275.64	--	272.54	
5/21/2015	12:16	259.16	--	256.06	
5/21/2015	12:17	243.99	--	240.89	
5/21/2015	12:18	229.86	--	226.76	
5/21/2015	12:19	216.73	--	213.63	
5/21/2015	12:20	205.32	--	202.22	
5/21/2015	12:21	193.86	--	190.76	
5/21/2015	12:22	187.09	--	183.99	
5/21/2015	12:23	176.31	--	173.21	
5/21/2015	12:24	166.37	--	163.27	
5/21/2015	12:25	157.44	--	154.34	
5/21/2015	12:26	148.60	--	145.50	
5/21/2015	12:27	140.16	--	137.06	
5/21/2015	12:28	132.49	--	129.39	
5/21/2015	12:29	125.33	--	122.23	
5/21/2015	12:30	118.87	--	115.77	
5/21/2015	12:35	92.71	--	89.61	
5/21/2015	12:40	72.47	--	69.37	
5/21/2015	12:45	55.64	--	52.54	
5/21/2015	12:50	43.72	--	40.62	
5/21/2015	12:55	35.24	--	32.14	
5/21/2015	13:00	29.11	--	26.01	90% water-level recovery
5/21/2015	13:10	21.21	--	18.11	
5/21/2015	13:20	16.66	--	13.56	
5/21/2015	13:30	13.74	--	10.64	
5/21/2015	13:40	11.68	--	8.58	
5/21/2015	13:50	10.12	--	7.02	
5/21/2015	14:00	8.86	--	5.76	
5/21/2015	15:00	5.83	--	2.73	
5/21/2015	16:00	4.54	--	1.44	
5/21/2015	17:00	3.80	--	0.70	
5/21/2015	18:00	3.80	--	0.70	
5/21/2015	19:00	3.63	--	0.53	
5/21/2015	20:00	3.49	--	0.39	
5/21/2015	21:00	3.33	--	0.23	
5/21/2015	22:00	3.21	--	0.11	
5/21/2015	23:00	3.09	--	-0.01	
5/22/2015	0:00	2.73	--	-0.37	
5/22/2015	1:00	2.44	--	-0.66	
5/22/2015	2:00	2.34	--	-0.77	
5/22/2015	3:00	2.59	--	-0.51	
5/22/2015	4:00	2.62	--	-0.48	
5/22/2015	5:00	2.73	--	-0.37	
5/22/2015	6:00	2.73	--	-0.37	
5/22/2015	7:00	2.73	--	-0.37	
5/22/2015	8:00	2.76	--	-0.34	
5/22/2015	9:00	2.43	--	-0.67	
5/22/2015	16:00	2.80	--	-0.30	
5/22/2015	17:00	2.33	--	-0.77	
5/22/2015	18:00	2.14	--	-0.96	
5/22/2015	19:00	2.43	--	-0.67	

NEW YORK AMERICAN WATER COMPANY
WILD OAKS WATER SYSTEM
LEWISBORO, NEW YORK

Summary of Water-Level Measurements Collected from Well 5 During
72-Hour Pumping Tests Conducted on Wells 4 and 5, May 18 Through May 30, 2015

Date	Time	Depth to Water (ft btoc)	Elapsed Time (min)	Drawdown (feet)	Comments
5/22/2015	20:00	2.58	--	-0.53	
5/22/2015	21:00	2.63	--	-0.48	
5/22/2015	22:00	2.66	--	-0.44	
5/22/2015	23:00	2.68	--	-0.42	
5/23/2015	0:00	2.69	--	-0.41	
5/23/2015	1:00	2.29	--	-0.81	
5/23/2015	2:00	2.10	--	-1.00	
5/23/2015	3:00	2.42	--	-0.68	
5/23/2015	4:00	2.58	--	-0.52	
5/23/2015	5:00	2.62	--	-0.48	
5/23/2015	6:00	2.64	--	-0.46	
5/23/2015	7:00	2.65	--	-0.45	
5/23/2015	8:00	2.66	--	-0.44	
5/23/2015	9:00	2.27	--	-0.83	
5/23/2015	10:00	2.12	--	-0.99	
5/23/2015	11:00	2.44	--	-0.66	
5/23/2015	12:00	2.58	--	-0.52	
5/23/2015	13:00	2.61	--	-0.49	
5/23/2015	14:00	2.66	--	-0.44	
5/23/2015	15:00	2.68	--	-0.42	
5/23/2015	16:00	2.67	--	-0.43	
5/23/2015	17:00	2.26	--	-0.84	
5/23/2015	18:00	2.07	--	-1.03	
5/23/2015	19:00	2.39	--	-0.71	
5/23/2015	20:00	2.51	--	-0.59	
5/23/2015	21:00	2.58	--	-0.52	
5/23/2015	22:00	2.60	--	-0.50	
5/23/2015	23:00	2.62	--	-0.48	
5/24/2015	0:00	2.64	--	-0.46	
5/24/2015	1:00	2.25	--	-0.85	
5/24/2015	2:00	2.07	--	-1.03	
5/24/2015	3:00	2.40	--	-0.70	
5/24/2015	4:00	2.53	--	-0.57	
5/24/2015	5:00	2.58	--	-0.52	
5/24/2015	6:00	2.63	--	-0.48	
5/24/2015	7:00	2.63	--	-0.47	
5/24/2015	8:00	2.65	--	-0.45	
5/24/2015	9:00	2.69	--	-0.41	
5/24/2015	10:00	2.69	--	-0.41	
5/24/2015	11:00	2.29	--	-0.82	
5/24/2015	12:00	2.11	--	-0.99	
5/24/2015	13:00	2.04	--	-1.06	
5/24/2015	14:00	2.39	--	-0.71	
5/24/2015	15:00	2.55	--	-0.55	
5/24/2015	16:00	2.60	--	-0.50	
5/24/2015	17:00	2.64	--	-0.46	
5/24/2015	18:00	2.66	--	-0.44	
5/24/2015	19:00	2.67	--	-0.43	
5/24/2015	20:00	2.68	--	-0.42	
5/24/2015	21:00	2.69	--	-0.41	
5/24/2015	22:00	2.29	--	-0.81	
5/24/2015	23:00	2.12	--	-0.98	
5/25/2015	0:00	2.03	--	-1.07	
5/25/2015	1:00	2.39	--	-0.71	
5/25/2015	2:00	2.54	--	-0.56	
5/25/2015	3:00	2.59	--	-0.51	
5/25/2015	4:00	2.64	--	-0.46	

NEW YORK AMERICAN WATER COMPANY
WILD OAKS WATER SYSTEM
LEWISBORO, NEW YORK

Summary of Water-Level Measurements Collected from Well 5 During
72-Hour Pumping Tests Conducted on Wells 4 and 5, May 18 Through May 30, 2015

Date	Time	Depth to Water (ft btoc)	Elapsed Time (min)	Drawdown (feet)	Comments
5/25/2015	5:00	2.67	--	-0.43	
5/25/2015	6:00	2.68	--	-0.42	
5/25/2015	7:00	2.69	--	-0.41	
5/25/2015	8:00	2.68	--	-0.43	
5/25/2015	9:00	2.67	--	-0.43	
5/25/2015	10:00	2.72	--	-0.38	
5/25/2015	11:00	2.74	--	-0.36	
5/25/2015	12:00	2.74	--	-0.36	
5/25/2015	13:00	2.75	--	-0.35	
5/25/2015	14:00	2.76	--	-0.34	
5/25/2015	15:00	2.77	--	-0.34	
5/25/2015	16:00	2.78	--	-0.32	
5/25/2015	17:00	2.79	--	-0.31	
5/25/2015	18:00	2.79	--	-0.31	
5/25/2015	19:00	2.81	--	-0.29	
5/25/2015	20:00	2.82	--	-0.28	
5/25/2015	21:00	2.81	--	-0.30	
5/25/2015	22:00	2.82	--	-0.29	
5/25/2015	23:00	2.80	--	-0.30	
5/26/2015	0:00	2.83	--	-0.27	
5/26/2015	1:00	2.80	--	-0.30	
5/26/2015	2:00	2.80	--	-0.30	
5/26/2015	3:00	2.81	--	-0.29	
5/26/2015	4:00	2.81	--	-0.29	
5/26/2015	5:00	2.80	--	-0.30	
5/26/2015	6:00	2.81	--	-0.29	
5/26/2015	7:00	2.36	--	-0.74	
5/26/2015	8:00	2.23	--	-0.87	
5/26/2015	9:00	2.16	--	-0.94	
5/26/2015	10:00	2.52	--	-0.58	
5/26/2015	11:00	9.03	--	5.93	Pump in Well 4 started at 10:08.
5/26/2015	12:00	15.86	--	12.76	
5/26/2015	13:00	23.91	--	20.81	
5/26/2015	14:00	38.97	--	35.87	
5/26/2015	15:00	45.44	--	42.34	
5/26/2015	16:00	48.24	--	45.14	
5/26/2015	17:00	49.57	--	46.47	
5/26/2015	18:00	50.69	--	47.59	
5/26/2015	19:00	51.44	--	48.34	
5/26/2015	20:00	52.60	--	49.50	
5/26/2015	21:00	53.66	--	50.56	
5/26/2015	22:00	54.25	--	51.15	
5/26/2015	23:00	54.49	--	51.39	
5/27/2015	0:00	54.51	--	51.41	
5/27/2015	1:00	54.82	--	51.72	
5/27/2015	2:00	55.18	--	52.08	
5/27/2015	3:00	55.65	--	52.55	
5/27/2015	4:00	55.83	--	52.73	
5/27/2015	5:00	55.91	--	52.81	
5/27/2015	6:00	56.22	--	53.12	
5/27/2015	7:00	56.39	--	53.29	
5/27/2015	8:00	56.79	--	53.69	
5/27/2015	9:00	57.12	--	54.02	
5/27/2015	10:00	57.25	--	54.15	
5/27/2015	11:00	57.47	--	54.37	
5/27/2015	12:00	57.71	--	54.61	
5/27/2015	13:00	57.87	--	54.77	

NEW YORK AMERICAN WATER COMPANY
WILD OAKS WATER SYSTEM
LEWISBORO, NEW YORK

Summary of Water-Level Measurements Collected from Well 5 During
72-Hour Pumping Tests Conducted on Wells 4 and 5, May 18 Through May 30, 2015

Date	Time	Depth to Water (ft btoc)	Elapsed Time (min)	Drawdown (feet)	Comments
5/27/2015	14:00	58.06	--	54.96	
5/27/2015	15:00	58.12	--	55.02	
5/27/2015	16:00	58.21	--	55.11	
5/27/2015	17:00	58.17	--	55.07	
5/27/2015	18:00	58.29	--	55.19	
5/27/2015	19:00	58.40	--	55.30	
5/27/2015	20:00	58.35	--	55.25	
5/27/2015	21:00	58.28	--	55.18	
5/27/2015	22:00	58.00	--	54.90	Pump in Well 4 removed 22:15.
5/27/2015	23:00	57.95	--	54.85	
5/28/2015	0:00	51.73	--	48.63	
5/28/2015	1:00	40.15	--	37.05	
5/28/2015	2:00	34.04	--	30.94	
5/28/2015	3:00	29.93	--	26.83	
5/28/2015	4:00	26.50	--	23.40	
5/28/2015	5:00	22.99	--	19.89	
5/28/2015	6:00	19.41	--	16.31	
5/28/2015	7:00	16.10	--	13.00	
5/28/2015	8:00	16.55	--	13.45	Pump in Well 4 reinstalled and restarted at 7:26.
5/28/2015	9:00	27.56	--	24.46	
5/28/2015	10:00	33.29	--	30.19	
5/28/2015	11:00	36.78	--	33.68	
5/28/2015	12:00	38.95	--	35.85	
5/28/2015	13:00	40.57	--	37.47	
5/28/2015	14:00	41.81	--	38.71	
5/28/2015	15:00	42.82	--	39.72	
5/28/2015	16:00	47.08	--	43.98	
5/28/2015	17:00	50.65	--	47.55	
5/28/2015	18:00	52.60	--	49.50	
5/28/2015	19:00	53.85	--	50.75	
5/28/2015	20:00	54.79	--	51.69	
5/28/2015	21:00	55.55	--	52.45	
5/28/2015	22:00	55.88	--	52.78	
5/28/2015	23:00	56.23	--	53.13	
5/29/2015	0:00	56.64	--	53.54	
5/29/2015	1:00	57.36	--	54.26	
5/29/2015	2:00	57.65	--	54.55	
5/29/2015	3:00	58.01	--	54.91	
5/29/2015	4:00	58.31	--	55.21	
5/29/2015	5:00	58.66	--	55.56	
5/29/2015	6:00	58.82	--	55.72	
5/29/2015	7:00	59.16	--	56.06	
5/29/2015	8:00	59.90	--	56.80	
5/29/2015	9:00	60.22	--	57.12	
5/29/2015	10:00	60.48	--	57.38	
5/29/2015	11:00	60.66	--	57.56	
5/29/2015	12:00	60.79	--	57.69	
5/29/2015	13:00	60.97	--	57.87	
5/29/2015	14:00	61.11	--	58.01	
5/29/2015	15:00	61.18	--	58.08	
5/29/2015	16:00	61.24	--	58.14	
5/29/2015	17:00	61.43	--	58.33	
5/29/2015	18:00	61.70	--	58.60	
5/29/2015	19:00	61.81	--	58.71	
5/29/2015	20:00	61.90	--	58.80	
5/29/2015	21:00	61.98	--	58.88	
5/29/2015	22:00	62.13	--	59.03	

NEW YORK AMERICAN WATER COMPANY
WILD OAKS WATER SYSTEM
LEWISBORO, NEW YORK

Summary of Water-Level Measurements Collected from Well 5 During
72-Hour Pumping Tests Conducted on Wells 4 and 5, May 18 Through May 30, 2015

Date	Time	Depth to Water (ft btoc)	Elapsed Time (min)	Drawdown (feet)	Comments
5/29/2015	23:00	62.31	--	59.21	
5/30/2015	0:00	62.29	--	59.19	
5/30/2015	1:00	62.21	--	59.11	
5/30/2015	2:00	62.23	--	59.13	
5/30/2015	3:00	62.53	--	59.43	
5/30/2015	4:00	62.75	--	59.65	
5/30/2015	5:00	62.91	--	59.81	
5/30/2015	6:00	63.06	--	59.96	
5/30/2015	7:00	63.17	--	60.07	
5/30/2015	8:00	63.34	--	60.24	Pump in Well 4 shut down at 8:02.
5/30/2015	9:00	53.64	--	50.54	
5/30/2015	10:00	45.45	--	42.35	
5/30/2015	11:00	39.59	--	36.49	
5/30/2015	12:00	35.63	--	32.53	
5/30/2015	13:00	32.60	--	29.50	
5/30/2015	14:00	30.06	--	26.96	
5/30/2015	15:00	27.80	--	24.70	
5/30/2015	16:00	25.56	--	22.46	
5/30/2015	17:00	23.08	--	19.98	
5/30/2015	18:00	20.04	--	16.94	
5/30/2015	19:00	17.09	--	13.99	
5/30/2015	20:00	14.56	--	11.46	
5/30/2015	21:00	12.44	--	9.34	
5/30/2015	22:00	10.68	--	7.58	
5/30/2015	23:00	9.11	--	6.01	
5/31/2015	0:00	8.08	--	4.98	
5/31/2015	1:00	7.33	--	4.23	
5/31/2015	2:00	6.69	--	3.59	
5/31/2015	3:00	5.68	--	2.58	
5/31/2015	4:00	4.95	--	1.85	
5/31/2015	5:00	4.34	--	1.24	
5/31/2015	6:00	4.17	--	1.07	
5/31/2015	7:00	3.85	--	0.75	
5/31/2015	8:00	3.53	--	0.43	
5/31/2015	9:00	3.25	--	0.15	
5/31/2015	10:00	3.12	--	0.02	
5/31/2015	11:00	3.04	--	-0.06	
5/31/2015	12:00	3.02	--	-0.08	
5/31/2015	13:00	2.95	--	-0.15	
5/31/2015	14:00	2.51	--	-0.59	
5/31/2015	15:00	2.35	--	-0.75	
5/31/2015	16:00	2.20	--	-0.91	
5/31/2015	17:00	2.06	--	-1.04	
5/31/2015	18:00	2.04	--	-1.06	
5/31/2015	19:00	1.99	--	-1.11	
5/31/2015	20:00	1.94	--	-1.16	
5/31/2015	21:00	1.90	--	-1.21	
5/31/2015	22:00	1.82	--	-1.28	
5/31/2015	23:00	1.78	--	-1.32	
6/1/2015	0:00	1.73	--	-1.37	
6/1/2015	1:00	1.64	--	-1.46	
6/1/2015	2:00	1.59	--	-1.51	
6/1/2015	3:00	1.54	--	-1.56	
6/1/2015	4:00	1.52	--	-1.58	
6/1/2015	5:00	1.48	--	-1.62	
6/1/2015	6:00	1.39	--	-1.71	
6/1/2015	7:00	1.40	--	-1.70	

NEW YORK AMERICAN WATER COMPANY
WILD OAKS WATER SYSTEM
LEWISBORO, NEW YORK

Summary of Water-Level Measurements Collected from Well 5 During
72-Hour Pumping Tests Conducted on Wells 4 and 5, May 18 Through May 30, 2015

Date	Time	Depth to Water (ft btoc)	Elapsed Time (min)	Drawdown (feet)	Comments
6/1/2015	8:00	1.38	--	-1.72	
6/1/2015	9:00	1.34	--	-1.76	
6/1/2015	10:00	1.32	--	-1.78	
6/1/2015	11:00	1.26	--	-1.84	
6/1/2015	12:00	1.23	--	-1.87	
6/1/2015	13:00	1.17	--	-1.93	
6/1/2015	14:00	1.12	--	-1.98	
6/1/2015	15:00	1.49	--	-1.62	
6/1/2015	16:00	1.55	--	-1.56	
6/1/2015	17:00	1.55	--	-1.56	
6/1/2015	18:00	1.58	--	-1.52	
6/1/2015	19:00	1.55	--	-1.55	
6/1/2015	20:00	1.57	--	-1.54	
6/1/2015	21:00	1.60	--	-1.50	
6/1/2015	22:00	1.53	--	-1.57	
6/1/2015	23:00	1.49	--	-1.61	
6/2/2015	0:00	1.50	--	-1.60	
6/2/2015	1:00	1.51	--	-1.59	
6/2/2015	2:00	1.42	--	-1.68	
6/2/2015	3:00	1.40	--	-1.70	
6/2/2015	4:00	1.39	--	-1.71	
6/2/2015	5:00	1.39	--	-1.71	
6/2/2015	6:00	1.38	--	-1.72	
6/2/2015	7:00	1.37	--	-1.73	
6/2/2015	8:00	1.39	--	-1.71	
6/2/2015	9:00	1.40	--	-1.70	
6/2/2015	10:00	1.41	--	-1.69	
6/2/2015	11:00	1.40	--	-1.70	
6/2/2015	12:00	1.42	--	-1.68	
6/2/2015	13:00	1.38	--	-1.72	
6/2/2015	14:00	1.36	--	-1.74	
6/2/2015	15:00	1.32	--	-1.78	

ft btoc feet below top of casing
gpm gallons per minute
min minute

PUMPING WELLS

WELL 6

NEW YORK AMERICAN WATER COMPANY
WILD OAKS WATER SYSTEM
LEWISBORO, NEW YORK

Hydrograph of Water-Level Measurements Collected from Well 6 During 72-Hour Pumping Test Conducted on Well 6 from June 14 Through 17, 2016

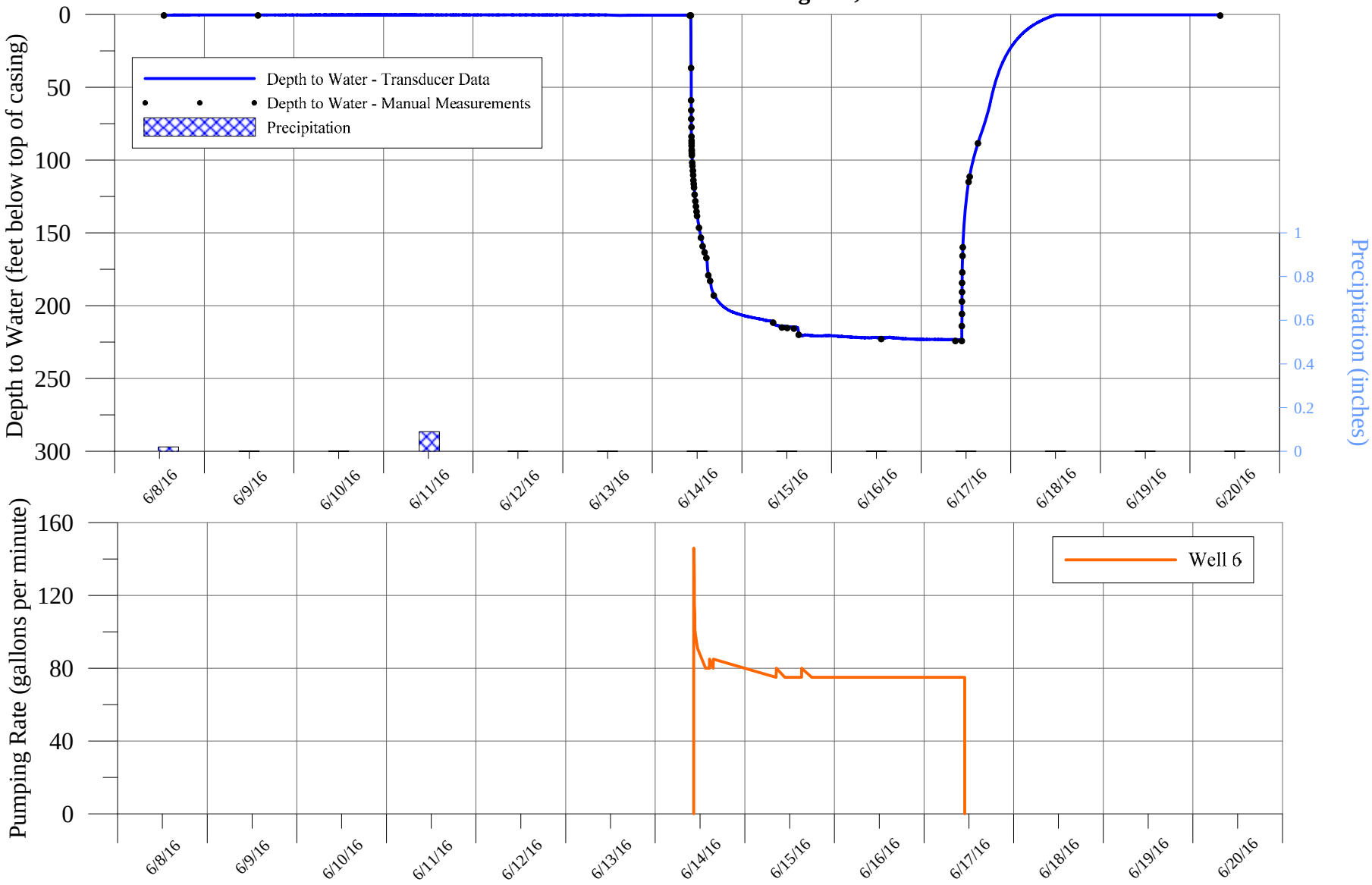

K:\Jobs\American Water Co\Wild Oaks\72-Hour Pumping Test (June 2016)\Hydrographs\Pumping Well\Well 6.grf

LEGGETTE, BRASHEARS & GRAHAM, INC.

NEW YORK AMERICAN WATER COMPANY
WILD OAKS WATER SYSTEM
LEWISBORO, NEW YORK

Summary of Water-Level Measurements Collected from Pumping Well 6 During
72-Hour Pumping Tests Conducted on Well 6, June 14 Through June 17, 2016

Date	Time	Depth to Water (ft btoc)	Elapsed Time (min)	Drawdown (feet)	Comments
6/8/2016	14:00	0.53	--	--	Pressure transducer installed.
6/8/2016	15:00	0.46	--	--	
6/8/2016	16:00	0.46	--	--	
6/8/2016	17:00	0.43	--	--	
6/8/2016	18:00	0.47	--	--	
6/8/2016	19:00	0.41	--	--	
6/8/2016	20:00	0.41	--	--	
6/8/2016	21:00	0.41	--	--	
6/8/2016	22:00	0.41	--	--	
6/8/2016	23:00	0.39	--	--	
6/9/2016	0:00	0.41	--	--	
6/9/2016	1:00	0.39	--	--	
6/9/2016	2:00	0.39	--	--	
6/9/2016	3:00	0.39	--	--	
6/9/2016	4:00	0.41	--	--	
6/9/2016	5:00	0.39	--	--	
6/9/2016	6:00	0.39	--	--	
6/9/2016	7:00	0.41	--	--	
6/9/2016	8:00	0.39	--	--	
6/9/2016	9:00	0.37	--	--	
6/9/2016	10:00	0.37	--	--	
6/9/2016	11:00	0.37	--	--	
6/9/2016	12:00	0.37	--	--	
6/9/2016	13:00	0.39	--	--	
6/9/2016	14:00	0.37	--	--	
6/9/2016	15:00	0.37	--	--	
6/9/2016	16:00	0.37	--	--	
6/9/2016	17:00	0.37	--	--	
6/9/2016	18:00	0.37	--	--	
6/9/2016	19:00	0.37	--	--	
6/9/2016	20:00	0.36	--	--	
6/9/2016	21:00	0.37	--	--	
6/9/2016	22:00	0.36	--	--	
6/9/2016	23:00	0.36	--	--	
6/10/2016	0:00	0.37	--	--	
6/10/2016	1:00	0.34	--	--	
6/10/2016	2:00	0.38	--	--	
6/10/2016	3:00	0.41	--	--	
6/10/2016	4:00	0.37	--	--	
6/10/2016	5:00	0.37	--	--	
6/10/2016	6:00	0.37	--	--	
6/10/2016	7:00	0.37	--	--	
6/10/2016	8:00	0.37	--	--	
6/10/2016	9:00	0.37	--	--	
6/10/2016	10:00	0.37	--	--	
6/10/2016	11:00	0.36	--	--	
6/10/2016	12:00	0.38	--	--	
6/10/2016	13:00	0.35	--	--	
6/10/2016	14:00	0.36	--	--	
6/10/2016	15:00	0.36	--	--	
6/10/2016	16:00	0.35	--	--	

NEW YORK AMERICAN WATER COMPANY
WILD OAKS WATER SYSTEM
LEWISBORO, NEW YORK

Summary of Water-Level Measurements Collected from Pumping Well 6 During
72-Hour Pumping Tests Conducted on Well 6, June 14 Through June 17, 2016

Date	Time	Depth to Water (ft btoc)	Elapsed Time (min)	Drawdown (feet)	Comments
6/10/2016	17:00	0.35	--	--	
6/10/2016	18:00	0.37	--	--	
6/10/2016	19:00	0.36	--	--	
6/10/2016	20:00	0.36	--	--	
6/10/2016	21:00	0.37	--	--	
6/10/2016	22:00	0.35	--	--	
6/10/2016	23:00	0.34	--	--	
6/11/2016	0:00	0.37	--	--	
6/11/2016	1:00	0.35	--	--	
6/11/2016	2:00	0.35	--	--	
6/11/2016	3:00	0.36	--	--	
6/11/2016	4:00	0.37	--	--	
6/11/2016	5:00	0.34	--	--	
6/11/2016	6:00	0.35	--	--	
6/11/2016	7:00	0.37	--	--	
6/11/2016	8:00	0.35	--	--	
6/11/2016	9:00	0.34	--	--	
6/11/2016	10:00	0.35	--	--	
6/11/2016	11:00	0.34	--	--	
6/11/2016	12:00	0.32	--	--	
6/11/2016	13:00	0.36	--	--	
6/11/2016	14:00	0.34	--	--	
6/11/2016	15:00	0.35	--	--	
6/11/2016	16:00	0.34	--	--	
6/11/2016	17:00	0.35	--	--	
6/11/2016	18:00	0.37	--	--	
6/11/2016	19:00	0.34	--	--	
6/11/2016	20:00	0.34	--	--	
6/11/2016	21:00	0.34	--	--	
6/11/2016	22:00	0.34	--	--	
6/11/2016	23:00	0.32	--	--	
6/12/2016	0:00	0.34	--	--	
6/12/2016	1:00	0.36	--	--	
6/12/2016	2:00	0.34	--	--	
6/12/2016	3:00	0.32	--	--	
6/12/2016	4:00	0.34	--	--	
6/12/2016	5:00	0.32	--	--	
6/12/2016	6:00	0.35	--	--	
6/12/2016	7:00	0.32	--	--	
6/12/2016	8:00	0.35	--	--	
6/12/2016	9:00	0.34	--	--	
6/12/2016	10:00	0.35	--	--	
6/12/2016	11:00	0.34	--	--	
6/12/2016	12:00	0.34	--	--	
6/12/2016	13:00	0.32	--	--	
6/12/2016	14:00	0.35	--	--	
6/12/2016	15:00	0.32	--	--	
6/12/2016	16:00	0.37	--	--	
6/12/2016	17:00	0.34	--	--	
6/12/2016	18:00	0.34	--	--	
6/12/2016	19:00	0.34	--	--	

NEW YORK AMERICAN WATER COMPANY
WILD OAKS WATER SYSTEM
LEWISBORO, NEW YORK

Summary of Water-Level Measurements Collected from Pumping Well 6 During
72-Hour Pumping Tests Conducted on Well 6, June 14 Through June 17, 2016

Date	Time	Depth to Water (ft btoc)	Elapsed Time (min)	Drawdown (feet)	Comments
6/12/2016	20:00	0.34	--	--	
6/12/2016	21:00	0.38	--	--	
6/12/2016	22:00	0.34	--	--	
6/12/2016	23:00	0.32	--	--	
6/13/2016	0:00	0.34	--	--	
6/13/2016	1:00	0.32	--	--	
6/13/2016	2:00	0.34	--	--	
6/13/2016	3:00	0.34	--	--	
6/13/2016	4:00	0.32	--	--	
6/13/2016	5:00	0.34	--	--	
6/13/2016	6:00	0.34	--	--	
6/13/2016	7:00	0.35	--	--	
6/13/2016	8:00	0.32	--	--	
6/13/2016	9:00	0.32	--	--	
6/13/2016	10:00	0.35	--	--	
6/13/2016	11:00	0.34	--	--	
6/13/2016	16:00	0.61	--	--	
6/13/2016	17:00	0.58	--	--	
6/13/2016	18:00	0.56	--	--	
6/13/2016	19:00	0.51	--	--	
6/13/2016	20:00	0.53	--	--	
6/13/2016	21:00	0.51	--	--	
6/13/2016	22:00	0.51	--	--	
6/13/2016	23:00	0.49	--	--	
6/14/2016	0:00	0.49	--	--	
6/14/2016	1:00	0.51	--	--	
6/14/2016	2:00	0.49	--	--	
6/14/2016	3:00	0.49	--	--	
6/14/2016	4:00	0.49	--	--	
6/14/2016	5:00	0.49	--	--	
6/14/2016	6:00	0.46	--	--	
6/14/2016	7:00	0.46	--	--	
6/14/2016	8:00	0.47	--	--	
6/14/2016	9:00	0.46	--	--	
6/14/2016	10:00	0.45	--	--	
6/14/2016	10:15	0.47	--	--	
6/14/2016	10:16	0.47	--	--	
6/14/2016	10:17	0.45	--	--	
6/14/2016	10:18	0.45	--	--	
6/14/2016	10:19	0.49	--	--	
6/14/2016	10:20	0.47	--	--	Pump in Well 6 started.
6/14/2016	10:21	13.93	1	13.45	Initial pumping rate 146 gpm.
6/14/2016	10:22	29.41	2	28.93	
6/14/2016	10:23	41.78	3	41.30	
6/14/2016	10:24	52.07	4	51.59	
6/14/2016	10:25	60.71	5	60.23	
6/14/2016	10:26	68.12	6	67.64	
6/14/2016	10:27	74.53	7	74.05	
6/14/2016	10:28	80.10	8	79.62	
6/14/2016	10:29	84.20	9	83.72	
6/14/2016	10:30	86.98	10	86.50	Pumping rate 128 gpm.

NEW YORK AMERICAN WATER COMPANY
WILD OAKS WATER SYSTEM
LEWISBORO, NEW YORK

Summary of Water-Level Measurements Collected from Pumping Well 6 During
72-Hour Pumping Tests Conducted on Well 6, June 14 Through June 17, 2016

Date	Time	Depth to Water (ft btoc)	Elapsed Time (min)	Drawdown (feet)	Comments
6/14/2016	10:31	88.84	11	88.36	
6/14/2016	10:32	90.71	12	90.23	
6/14/2016	10:33	92.44	13	91.96	
6/14/2016	10:34	94.10	14	93.62	
6/14/2016	10:35	95.57	15	95.09	
6/14/2016	10:40	100.94	20	100.46	Pumping rate 102 gpm.
6/14/2016	10:45	103.13	25	102.65	
6/14/2016	10:50	106.20	30	105.72	
6/14/2016	10:55	109.35	35	108.87	
6/14/2016	11:00	112.44	40	111.96	
6/14/2016	11:05	115.30	45	114.82	Pumping rate 94 gpm.
6/14/2016	11:10	117.88	50	117.40	
6/14/2016	11:15	120.29	55	119.81	
6/14/2016	11:20	122.64	60	122.16	Pumping rate 91 gpm.
6/14/2016	12:00	137.72	100	137.24	Pumping rate 85 gpm.
6/14/2016	13:00	152.58	160	152.10	Pumping rate 85 gpm.
6/14/2016	14:00	162.56	220	162.08	Pumping rate 80 gpm.
6/14/2016	14:31	166.49	251	166.01	Pumping rate manually increased to 85 gpm.
6/14/2016	15:00	178.04	280	177.56	Pumping rate 85 gpm.
6/14/2016	16:00	189.28	340	188.80	
6/14/2016	17:00	194.68	400	194.20	Pumping rate 83 gpm.
6/14/2016	18:00	198.17	460	197.69	
6/14/2016	19:00	200.65	520	200.17	Pumping rate 82 gpm.
6/14/2016	20:00	202.45	580	201.97	
6/14/2016	21:00	203.90	640	203.42	Pumping rate 80 gpm.
6/14/2016	22:00	204.84	700	204.36	
6/14/2016	23:00	205.76	760	205.28	Pumping rate 80 gpm.
6/15/2016	0:00	206.51	820	206.03	
6/15/2016	1:00	207.19	880	206.71	Pumping rate 80 gpm.
6/15/2016	2:00	207.75	940	207.27	
6/15/2016	3:00	208.29	1000	207.81	Pumping rate 78 gpm.
6/15/2016	4:00	208.79	1060	208.31	
6/15/2016	5:00	209.18	1120	208.70	Pumping rate 76 gpm.
6/15/2016	6:00	209.96	1180	209.48	
6/15/2016	7:00	210.37	1240	209.89	
6/15/2016	8:00	210.66	1300	210.18	Pumping rate 75 gpm.
6/15/2016	8:25	211.17	1325	210.69	Pumping rate increase to 80 gpm.
6/15/2016	9:00	213.37	1360	212.89	
6/15/2016	10:00	213.99	1420	213.51	Pumping rate 80 gpm.
6/15/2016	11:00	214.20	1480	213.72	
6/15/2016	12:00	214.48	1540	214.00	Pumping rate 77 gpm.
6/15/2016	13:00	214.65	1600	214.17	
6/15/2016	14:00	214.84	1660	214.36	
6/15/2016	15:00	215.95	1720	215.47	Pumping rate 75 gpm.
6/15/2016	15:13	218.64	1733	218.16	Pumping rate increased to 80 gpm. Valve wide open, no more rate adjustments possible.
6/15/2016	16:00	220.48	1780	220.00	Pumping rate 80 gpm.
6/15/2016	17:00	220.14	1840	219.66	
6/15/2016	18:00	220.38	1900	219.90	Pumping rate 75 gpm.
6/15/2016	19:00	220.59	1960	220.11	
6/15/2016	20:00	220.74	2020	220.26	Pumping rate 75 gpm.

NEW YORK AMERICAN WATER COMPANY
WILD OAKS WATER SYSTEM
LEWISBORO, NEW YORK

Summary of Water-Level Measurements Collected from Pumping Well 6 During
72-Hour Pumping Tests Conducted on Well 6, June 14 Through June 17, 2016

Date	Time	Depth to Water (ft btoc)	Elapsed Time (min)	Drawdown (feet)	Comments
6/15/2016	21:00	220.83	2080	220.35	
6/15/2016	22:00	220.49	2140	220.01	Pumping rate 75 gpm.
6/15/2016	23:00	220.59	2200	220.11	
6/16/2016	0:00	220.68	2260	220.20	Pumping rate 75 gpm.
6/16/2016	1:00	220.78	2320	220.30	
6/16/2016	2:00	221.04	2380	220.56	Pumping rate 75 gpm.
6/16/2016	3:00	221.25	2440	220.77	
6/16/2016	4:00	221.36	2500	220.88	Pumping rate 75 gpm.
6/16/2016	5:00	221.57	2560	221.09	
6/16/2016	6:00	221.70	2620	221.22	Pumping rate 75 gpm.
6/16/2016	7:00	221.85	2680	221.37	
6/16/2016	8:00	221.96	2740	221.48	Pumping rate 75 gpm.
6/16/2016	9:00	222.09	2800	221.61	
6/16/2016	10:00	222.02	2860	221.54	Pumping rate 75 gpm.
6/16/2016	11:00	221.92	2920	221.44	
6/16/2016	12:00	221.91	2980	221.43	Pumping rate 75 gpm.
6/16/2016	13:00	222.09	3040	221.61	
6/16/2016	14:00	222.08	3100	221.60	Pumping rate 75 gpm.
6/16/2016	15:00	221.98	3160	221.50	
6/16/2016	16:00	222.01	3220	221.53	Pumping rate 75 gpm.
6/16/2016	17:00	222.22	3280	221.74	
6/16/2016	18:00	222.28	3340	221.80	Pumping rate 75 gpm.
6/16/2016	19:00	222.63	3400	222.15	
6/16/2016	20:00	222.71	3460	222.23	Pumping rate 75 gpm.
6/16/2016	21:00	222.95	3520	222.47	Pumping rate 75 gpm.
6/16/2016	22:00	223.03	3580	222.55	
6/16/2016	23:00	223.10	3640	222.62	Pumping rate 75 gpm.
6/17/2016	0:00	223.10	3700	222.62	
6/17/2016	1:00	223.18	3760	222.70	Pumping rate 75 gpm.
6/17/2016	2:00	223.18	3820	222.70	
6/17/2016	3:00	223.18	3880	222.70	Pumping rate 75 gpm.
6/17/2016	4:00	223.16	3940	222.68	
6/17/2016	5:00	223.29	4000	222.81	Pumping rate 75 gpm.
6/17/2016	6:00	223.29	4060	222.81	
6/17/2016	7:00	223.39	4120	222.91	Pumping rate 75 gpm.
6/17/2016	8:00	223.35	4180	222.87	
6/17/2016	9:00	223.31	4240	222.83	Pumping rate 75 gpm.
6/17/2016	10:00	223.43	4300	222.95	
6/17/2016	10:50	223.37	4350	222.89	Pumping rate 75 gpm.
6/17/2016	10:51	223.39	4351	222.91	
6/17/2016	10:52	223.37	4352	222.89	Pumping rate 75 gpm.
6/17/2016	10:53	223.37	4353	222.89	
6/17/2016	10:54	223.35	4354	222.87	Pumping rate 75 gpm.
6/17/2016	10:55	215.46	--	214.98	Pump in Well 6 shut down.
6/17/2016	10:56	206.53	--	206.05	
6/17/2016	10:57	198.43	--	197.95	
6/17/2016	10:58	191.20	--	190.72	
6/17/2016	10:59	184.99	--	184.51	
6/17/2016	11:00	179.54	--	179.06	
6/17/2016	11:01	175.02	--	174.54	
6/17/2016	11:02	171.36	--	170.88	

NEW YORK AMERICAN WATER COMPANY
WILD OAKS WATER SYSTEM
LEWISBORO, NEW YORK

Summary of Water-Level Measurements Collected from Pumping Well 6 During
72-Hour Pumping Tests Conducted on Well 6, June 14 Through June 17, 2016

Date	Time	Depth to Water (ft btoc)	Elapsed Time (min)	Drawdown (feet)	Comments
6/17/2016	11:03	168.44	--	167.96	
6/17/2016	11:04	166.24	--	165.76	
6/17/2016	11:05	164.55	--	164.07	
6/17/2016	11:10	159.07	--	158.59	
6/17/2016	11:15	154.85	--	154.37	
6/17/2016	11:20	151.05	--	150.57	
6/17/2016	11:25	147.59	--	147.11	
6/17/2016	11:30	144.34	--	143.86	
6/17/2016	11:35	141.39	--	140.91	
6/17/2016	11:40	138.62	--	138.14	
6/17/2016	11:45	135.99	--	135.51	
6/17/2016	11:50	133.58	--	133.10	
6/17/2016	11:55	131.35	--	130.87	
6/17/2016	12:00	129.20	--	128.72	
6/17/2016	13:00	110.90	--	110.42	
6/17/2016	14:00	99.40	--	98.92	
6/17/2016	15:00	90.20	--	89.72	
6/17/2016	16:00	82.37	--	81.89	
6/17/2016	17:00	74.81	--	74.33	
6/17/2016	18:00	65.91	--	65.43	
6/17/2016	19:00	55.05	--	54.57	
6/17/2016	20:00	45.59	--	45.11	
6/17/2016	21:00	38.06	--	37.58	
6/17/2016	22:00	31.95	--	31.47	
6/17/2016	23:00	27.00	--	26.52	
6/18/2016	0:00	22.80	--	22.32	
6/18/2016	1:00	19.24	--	18.76	
6/18/2016	2:00	16.16	--	15.68	
6/18/2016	3:00	13.47	--	12.99	
6/18/2016	4:00	11.17	--	10.69	
6/18/2016	5:00	9.14	--	8.66	
6/18/2016	6:00	7.41	--	6.93	
6/18/2016	7:00	5.85	--	5.37	
6/18/2016	8:00	4.49	--	4.01	
6/18/2016	9:00	3.28	--	2.80	
6/18/2016	10:00	2.15	--	1.67	
6/18/2016	11:00	1.16	--	0.68	
6/18/2016	12:00	0.29	--	-0.19	100% Water-level recovery to pre-test static.
6/18/2016	13:00	0.33	--	-0.15	
6/18/2016	14:00	0.29	--	-0.19	
6/18/2016	15:00	0.31	--	-0.17	
6/18/2016	16:00	0.28	--	-0.20	
6/18/2016	17:00	0.26	--	-0.22	
6/18/2016	18:00	0.31	--	-0.17	
6/18/2016	19:00	0.32	--	-0.16	
6/18/2016	20:00	0.30	--	-0.18	
6/18/2016	21:00	0.28	--	-0.20	
6/18/2016	22:00	0.29	--	-0.19	
6/18/2016	23:00	0.29	--	-0.19	
6/19/2016	0:00	0.29	--	-0.19	
6/19/2016	1:00	0.29	--	-0.19	

NEW YORK AMERICAN WATER COMPANY
WILD OAKS WATER SYSTEM
LEWISBORO, NEW YORK

Summary of Water-Level Measurements Collected from Pumping Well 6 During
72-Hour Pumping Tests Conducted on Well 6, June 14 Through June 17, 2016

Date	Time	Depth to Water (ft btoc)	Elapsed Time (min)	Drawdown (feet)	Comments
6/19/2016	2:00	0.31	--	-0.17	
6/19/2016	3:00	0.29	--	-0.20	
6/19/2016	4:00	0.29	--	-0.20	
6/19/2016	5:00	0.28	--	-0.20	
6/19/2016	6:00	0.28	--	-0.20	
6/19/2016	7:00	0.28	--	-0.20	
6/19/2016	8:00	0.28	--	-0.20	
6/19/2016	9:00	0.28	--	-0.20	
6/19/2016	10:00	0.28	--	-0.20	
6/19/2016	11:00	0.28	--	-0.20	
6/19/2016	12:00	0.28	--	-0.20	
6/19/2016	13:00	0.27	--	-0.21	
6/19/2016	14:00	0.29	--	-0.19	
6/19/2016	15:00	0.27	--	-0.21	
6/19/2016	16:00	0.27	--	-0.21	
6/19/2016	17:00	0.32	--	-0.17	
6/19/2016	18:00	0.27	--	-0.21	
6/19/2016	19:00	0.27	--	-0.21	
6/19/2016	20:00	0.27	--	-0.21	
6/19/2016	21:00	0.29	--	-0.19	
6/19/2016	22:00	0.29	--	-0.19	
6/19/2016	23:00	0.29	--	-0.19	
6/20/2016	0:00	0.26	--	-0.22	
6/20/2016	1:00	0.29	--	-0.19	
6/20/2016	2:00	0.29	--	-0.19	
6/20/2016	3:00	0.31	--	-0.17	
6/20/2016	4:00	0.29	--	-0.19	
6/20/2016	5:00	0.26	--	-0.22	
6/20/2016	6:00	0.26	--	-0.22	
6/20/2016	7:00	0.30	--	-0.18	
6/20/2016	8:00	0.26	--	-0.22	Pressure transducer removed from well.

ft btoc feet below top of casing
min minutes
gpm gallons per minute

K:\Jobs\American Water Co\Wild Oaks\72-Hour Pumping Test (June 2016)\Tables\Well 6 water levels_ss.doc

APPENDIX IV

180-DAY WATER-LEVEL PROJECTIONS

NEW YORK AMERICAN WATER COMPANY
WILD OAKS WATER SYSTEM
LEWISBORO, NY

180 Day Water-Level Drawdown Projection for Well 4 During 72-Hour Pumping Test
Conducted on Well 4, May 26 Through May 30, 2015

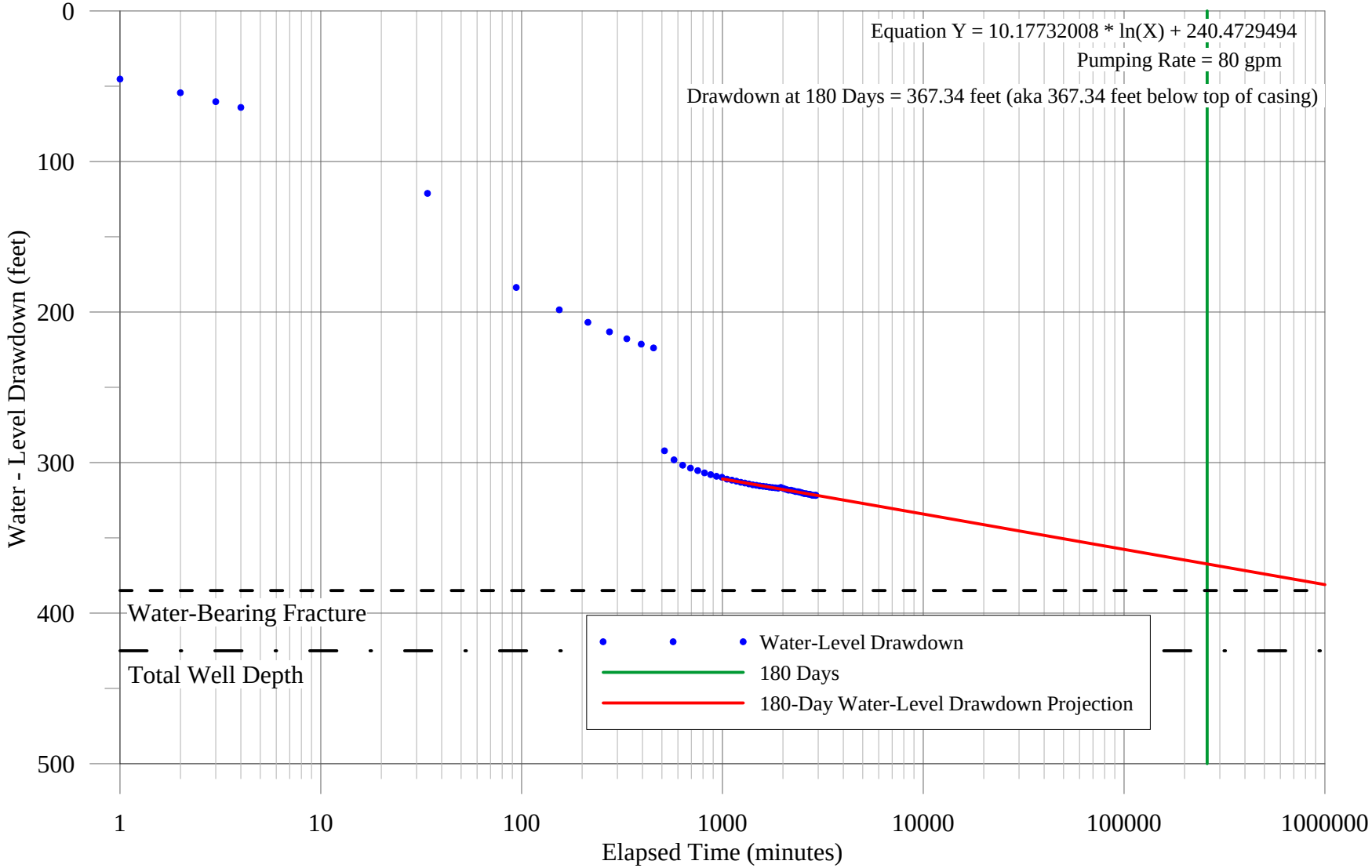

K:\Jobs\American Water Co\Wild Oak\72-Hour Pumping Test (May 2015)\Hydrographs\180 Day- Well 4_SSworking.grf

LEGGETTE, BRASHEARS & GRAHAM, INC.

NEW YORK AMERICAN WATER COMPANY
WILD OAKS WATER SYSTEM
LEWISBORO, NEW YORK

180 Day Water-Level Drawdown Projection for Well 5 During 72-Hour Pumping Test
Conducted on Well 5, May 18 Through May 21, 2015

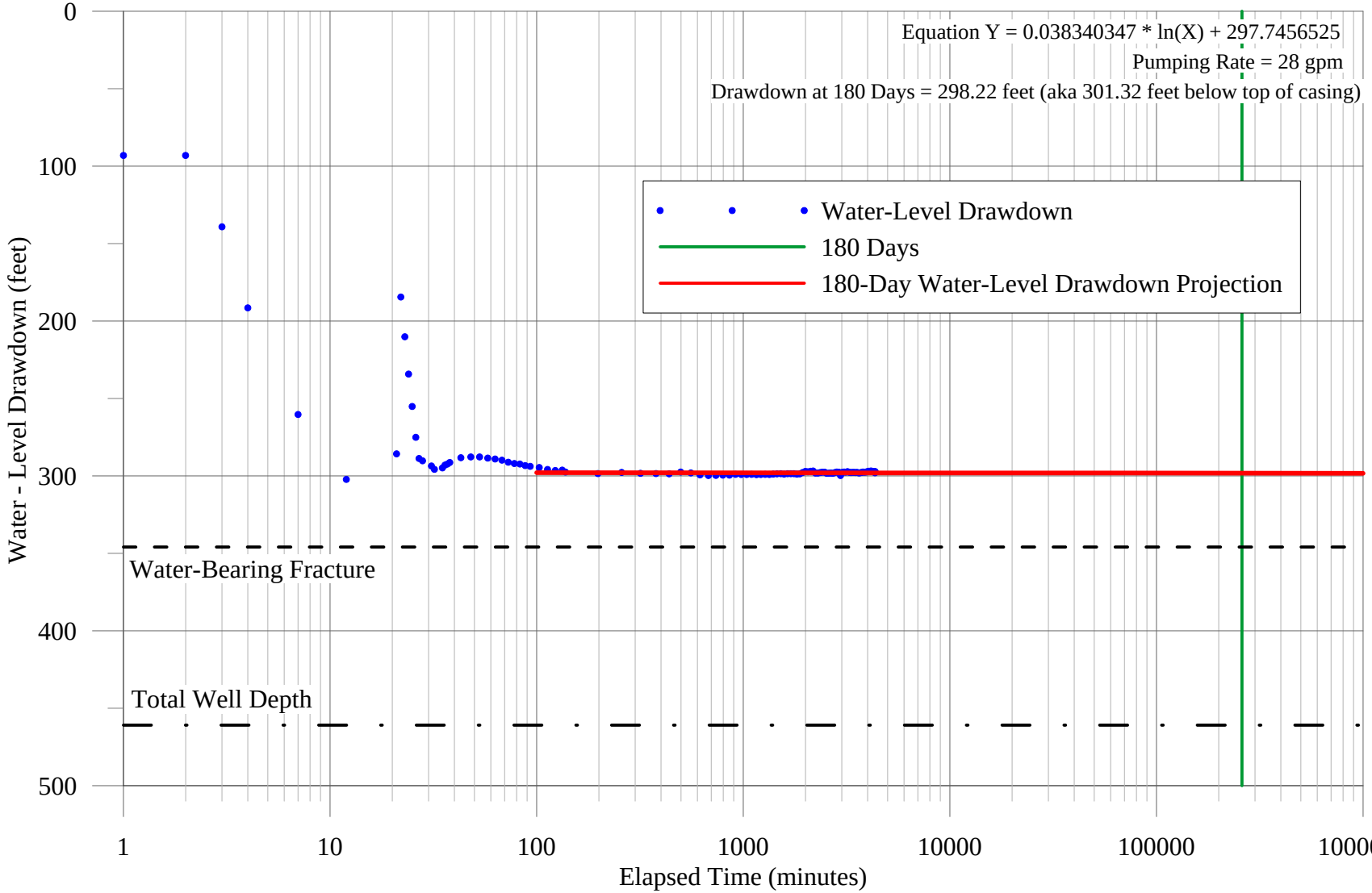

K:\Jobs\American Water Co\Wild Oak\72-Hour Pumping Test (May 2015)\Hydrographs\180 Day - Well 5_SS.grf

LEGGETTE, BRASHEARS & GRAHAM, INC.

NEW YORK AMERICAN WATER COMPANY
WILD OAKS WATER SYSTEM
LEWISBORO, NEW YORK

180 Day Water-Level Drawdown Projection for Well 6 During 72-Hour Pumping Test
Conducted on Well 6, June 14 Through June 17, 2016

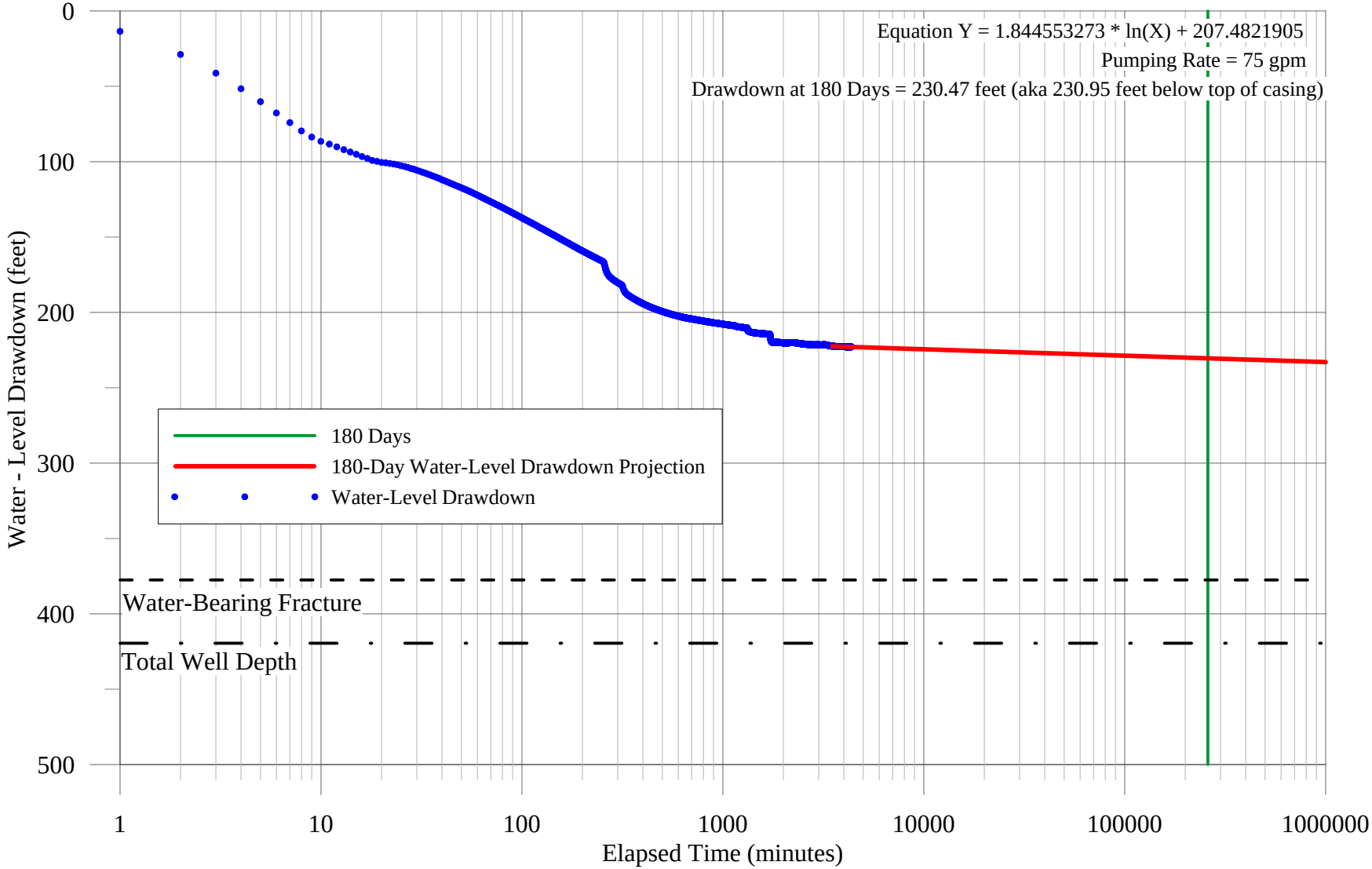

K:\Jobs\American Water Co\Wild Oak\72-Hour Pumping Test (June 2016)\Hydrographs\Pumping Well\Well 6 180 Day.grf

LEGGETTE, BRASHEARS & GRAHAM, INC.

APPENDIX V

ONSITE WELL MONITORING WELLS

ONSITE MONITORING WELLS

MAY 2015

NEW YORK AMERICAN WATER COMPANY
WILD OAKS WATER SYSTEM
LEWISBORO, NEW YORK

Hydrograph of Water-Level Measurements Collected from Well 1 During 72-Hour Pumping Test Program Conducted on Well 4 and Well 5, May 18 Through May 30, 2015

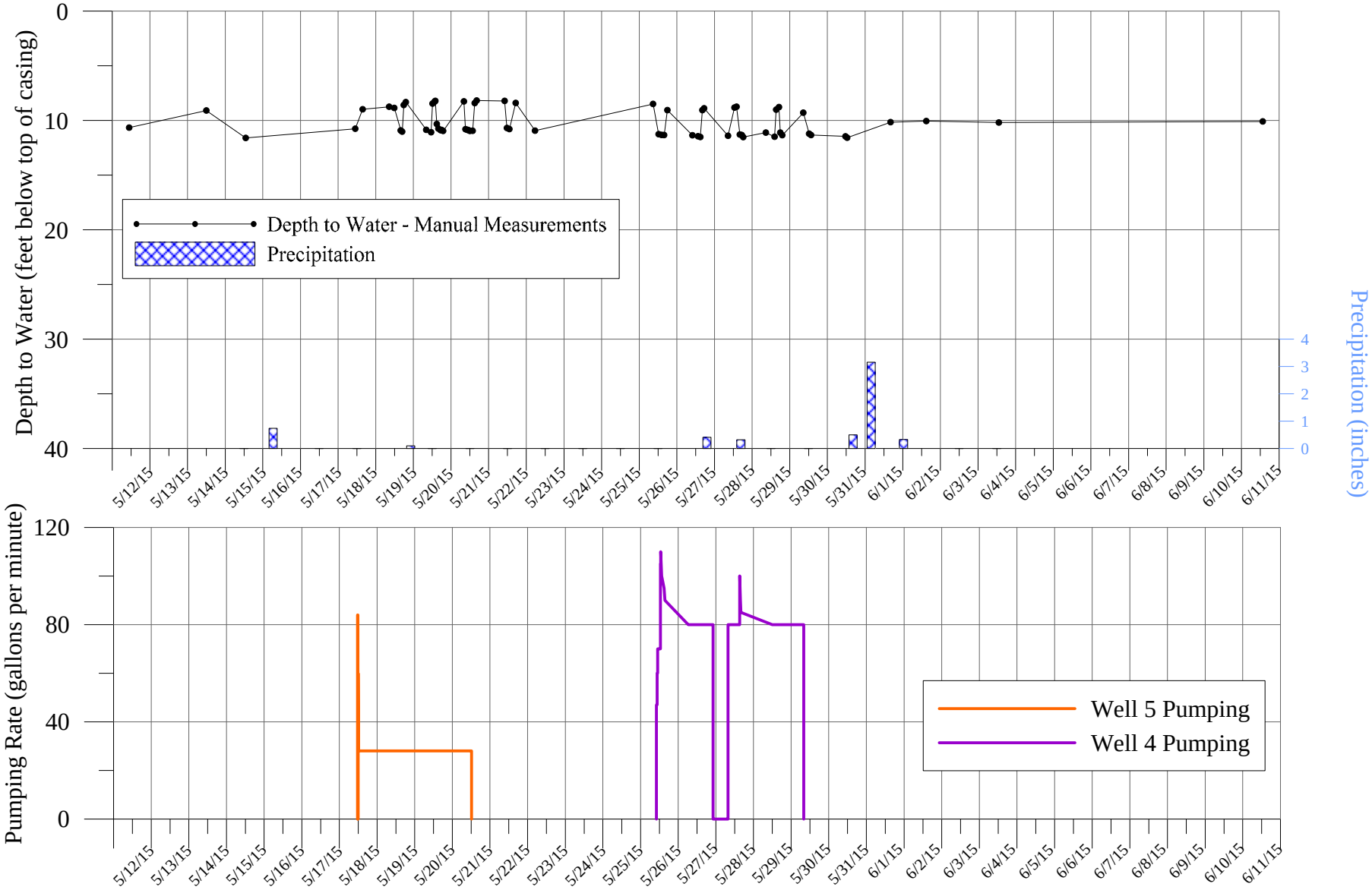

K:\Jobs\American Water Co\Wild Oak\72-Hour Pumping Test (May 2015)\Hydrographs\onsite wells.Well 1.grf

LEGGETTE, BRASHEARS & GRAHAM, INC.

NEW YORK AMERICAN WATER COMPANY
WILD OAKS WATER SYSTEM
LEWISBORO, NEW YORK

Hydrograph of Water-Level Measurements Collected from Well 2 During 72-Hour Pumping Test Program Conducted on Well 4 and Well 5, May 18 Through May 30, 2015

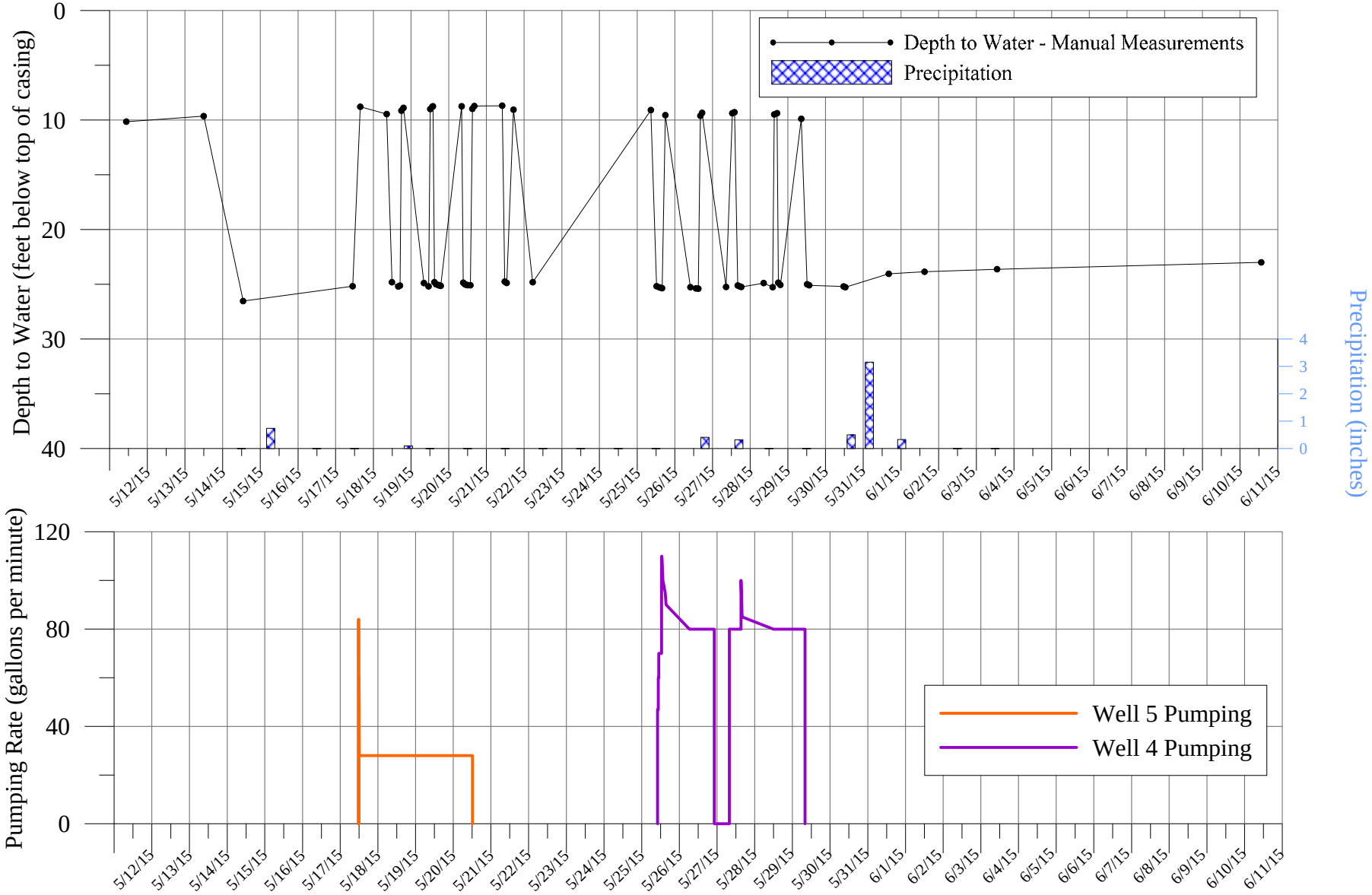

K:\Jobs\American Water Co\Wild Oak\72-Hour Pumping Test (May 2015)\Hydrographs\onsite wells\Well 2.grf

LEGGETTE, BRASHEARS & GRAHAM, INC.

NEW YORK AMERICAN WATER COMPANY
WILD OAKS WATER SYSTEM
LEWISBORO, NEW YORK

Hydrograph of Water-Level Measurements Collected from MW-1 During 72-Hour Pumping Test Program Conducted on Well 4 and Well 5, May 18 Through May 30, 2015

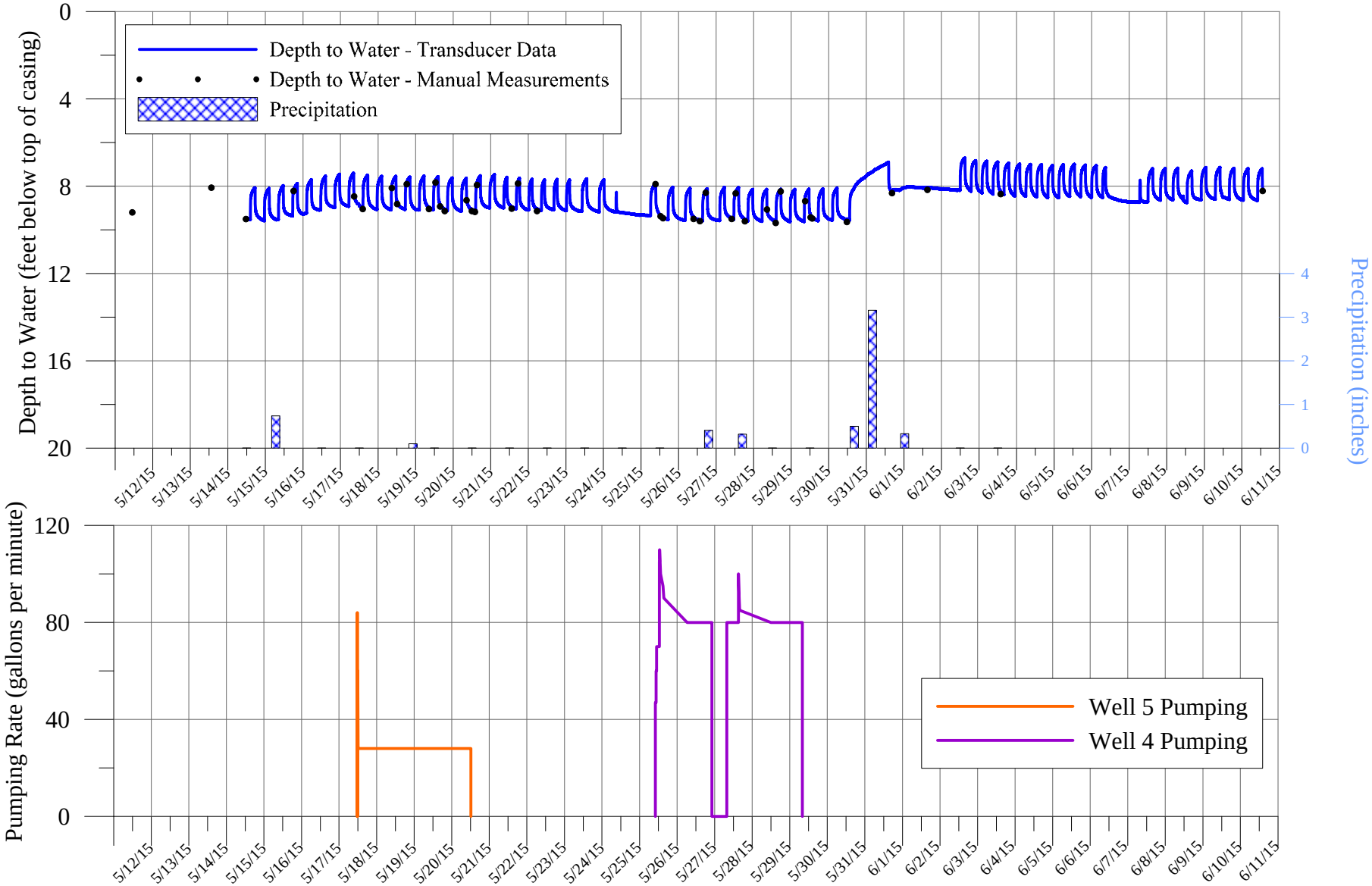

K:\Jobs\American Water Co\Wild Oak\72-Hour Pumping Test (May 2015)\Hydrographs\onsite wells\MW-1.grf

LEGGETTE, BRASHEARS & GRAHAM, INC.

NEW YORK AMERICAN WATER COMPANY
WILD OAKS WATER SYSTEM
LEWISBORO, NEW YORK

Hydrograph of Water-Level Measurements Collected from MW-2 During 72-Hour Pumping Test Program Conducted on Well 4 and Well 5, May 18 Through May 30, 2015

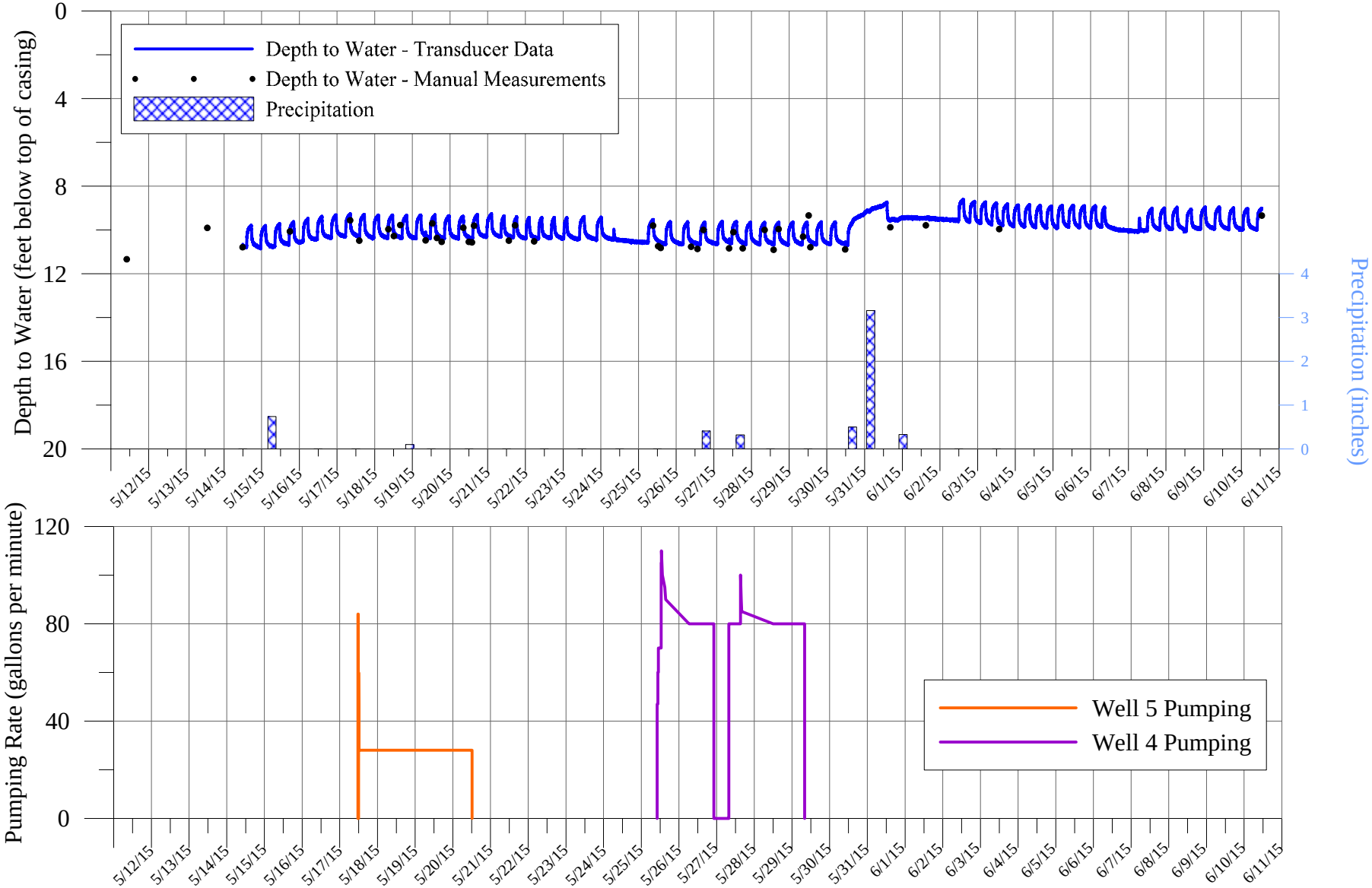

K:\Jobs\American Water Co\Wild Oak\72-Hour Pumping Test (May 2015)\Hydrographs\onsite wells.MW-2.grf

LEGGETTE, BRASHEARS & GRAHAM, INC.

NEW YORK AMERICAN WATER COMPANY
WILD OAKS WATER SYSTEM
LEWISBORO, NEW YORK

Hydrograph of Water-Level Measurements Collected from MW-3 During 72-Hour Pumping Test Program Conducted on Well 4 and Well 5, May 18 Through May 30, 2015

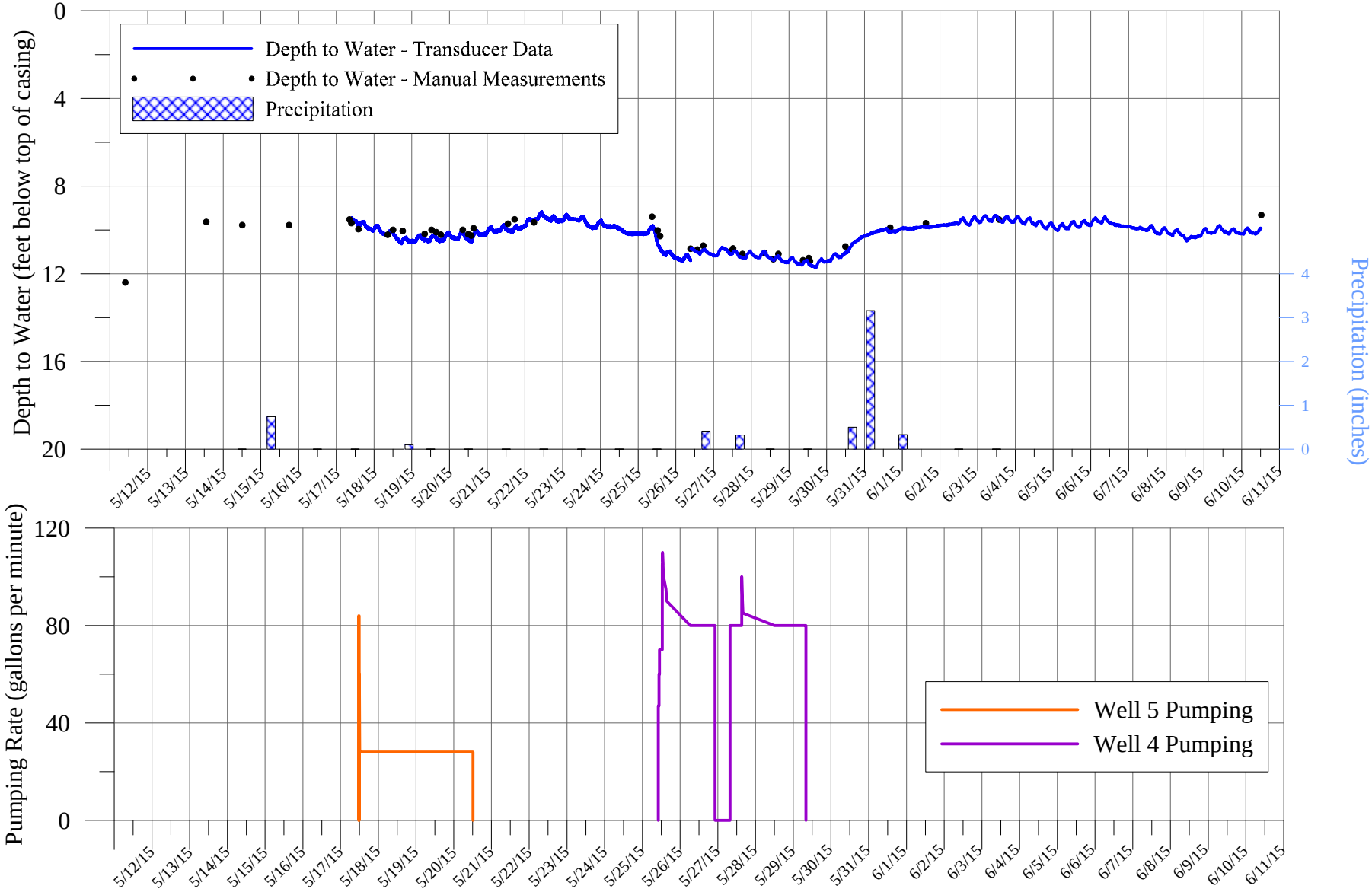

K:\Jobs\American Water Co\Wild Oak\72-Hour Pumping Test (May 2015)\Hydrographs\onsite wells.MW-3.grf

LEGGETTE, BRASHEARS & GRAHAM, INC.

NEW YORK AMERICAN WATER COMPANY
WILD OAKS WATER SYSTEM
LEWISBORO, NEW YORK

Summary of Manual Water-Level Measurements Collected from Onsite Production Wells 1 and 2 During 72-Hour Pumping Tests Conducted on Wells 4 and 5, May 18 Through May 30, 2015

Date	Time	Depth to Water (ft btoc)	Date	Time	Depth to Water (ft btoc)
Well 1			**Well 2**		
5/12/2015	10:47	10.66	5/12/2015	10:42	10.15
5/14/2015	11:59	9.10	5/14/2015	11:58	9.64
5/15/2015	13:08	11.60	5/15/2015	13:03	26.54
5/18/2015	10:55	10.76	5/18/2015	10:52	25.18
5/18/2015	15:42	8.98	5/18/2015	15:41	8.79
5/19/2015	8:34	8.75	5/19/2015	8:32	9.45
5/19/2015	11:54	8.85	5/19/2015	11:51	24.82
5/19/2015	15:55	10.91	5/19/2015	15:52	25.20
5/19/2015	16:54	11.03	5/19/2015	16:56	25.12
5/19/2015	17:57	8.59	5/19/2015	17:55	9.15
5/19/2015	19:14	8.32	5/19/2015	19:12	8.89
5/20/2015	8:15	10.85	5/20/2015	8:13	24.89
5/20/2015	11:16	11.08	5/20/2015	11:15	25.19
5/20/2015	12:16	8.45	5/20/2015	12:15	9.00
5/20/2015	13:31	8.28	5/20/2015	13:30	8.80
5/20/2015	13:58	8.22	5/20/2015	13:57	8.75
5/20/2015	14:58	10.32	5/20/2015	14:58	24.82
5/20/2015	15:58	10.75	5/20/2015	15:57	25.00
5/20/2015	17:23	10.90	5/20/2015	17:21	25.08
5/20/2015	17:59	10.87	5/20/2015	17:58	25.09
5/20/2015	18:59	10.96	5/20/2015	18:58	25.15
5/21/2015	8:16	8.25	5/21/2015	8:15	8.75
5/21/2015	9:16	10.80	5/21/2015	9:15	24.85
5/21/2015	10:21	10.85	5/21/2015	10:20	25.00
5/21/2015	11:01	10.88	5/21/2015	11:00	25.04
5/21/2015	12:01	10.96	5/21/2015	12:00	25.08
5/21/2015	13:47	10.95	5/21/2015	13:46	25.10
5/21/2015	15:07	8.41	5/21/2015	15:05	8.98
5/21/2015	16:23	8.18	5/21/2015	16:21	8.72
5/22/2015	10:08	8.22	5/22/2015	10:06	8.69
5/22/2015	11:40	10.70	5/22/2015	11:38	24.76
5/22/2015	13:15	10.79	5/22/2015	13:00	24.88
5/22/2015	17:16	8.40	5/22/2015	17:14	9.05
5/23/2015	5:35	10.94	5/23/2015	5:32	24.81
5/26/2015	8:48	8.49	5/26/2015	8:47	9.10
5/26/2015	12:24	11.26	5/26/2015	12:23	25.18
5/26/2015	14:17	11.32	5/26/2015	14:15	25.30
5/26/2015	15:54	11.34	5/26/2015	15:53	25.36
5/26/2015	17:59	9.05	5/26/2015	17:57	9.56
5/27/2015	10:00	11.36	5/27/2015	9:58	25.26
5/27/2015	13:30	11.44	5/27/2015	13:28	25.38
5/27/2015	14:59	11.51	5/27/2015	14:58	25.40
5/27/2015	16:18	9.05	5/27/2015	16:16	9.62
5/27/2015	17:22	8.89	5/27/2015	17:21	9.35
5/28/2015	8:41	11.40	5/28/2015	8:40	25.24
5/28/2015	12:42	8.83	5/28/2015	12:41	9.37
5/28/2015	14:04	8.75	5/28/2015	14:03	9.29
5/28/2015	16:08	11.30	5/28/2015	16:07	25.11
5/28/2015	17:21	11.33	5/28/2015	17:19	25.19
5/28/2015	18:19	11.52	5/28/2015	18:18	25.24
5/29/2015	8:45	11.11	5/29/2015	8:41	24.90

NEW YORK AMERICAN WATER COMPANY
WILD OAKS WATER SYSTEM
LEWISBORO, NEW YORK

Summary of Manual Water-Level Measurements Collected from Onsite Production Wells 1 and 2 During 72-Hour Pumping Tests Conducted on Wells 4 and 5, May 18 Through May 30, 2015

Date	Time	Depth to Water (ft btoc)	Date	Time	Depth to Water (ft btoc)
Well 1 (continued)			**Well 2 (continued)**		
5/29/2015	14:17	11.50	5/29/2015	14:16	25.27
5/29/2015	15:20	9.02	5/29/2015	15:18	9.50
5/29/2015	17:08	8.77	5/29/2015	17:05	9.38
5/29/2015	17:57	11.11	5/29/2015	17:55	24.85
5/29/2015	19:16	11.35	5/29/2015	19:12	25.06
5/30/2015	8:38	9.30	5/30/2015	8:35	9.90
5/30/2015	12:20	11.22	5/30/2015	12:17	25.00
5/30/2015	13:35	11.33	5/30/2015	13:33	25.10
5/31/2015	11:32	11.46	5/31/2015	11:29	25.20
5/31/2015	12:40	11.57	5/31/2015	12:39	25.26
6/1/2015	16:17	10.16	6/1/2015	16:15	24.04
6/2/2015	15:01	10.05	6/2/2015	15:00	23.86
6/4/2015	13:20	10.19	6/4/2015	13:17	23.63
6/11/2015	13:33	10.09	6/11/2015	13:31	23.00

ft btoc feet below top of casing

ONSITE MONITORING WELLS

JUNE 2016

NEW YORK AMERICAN WATER COMPANY
WILD OAKS WATER SYSTEM
LEWISBORO, NEW YORK

Hydrograph of Water-Level Measurements Collected from Existing Sand and Gravel Production Well 1 During 72-Hour Pumping Test Conducted on Well 6 from June 14 Through 17, 2016

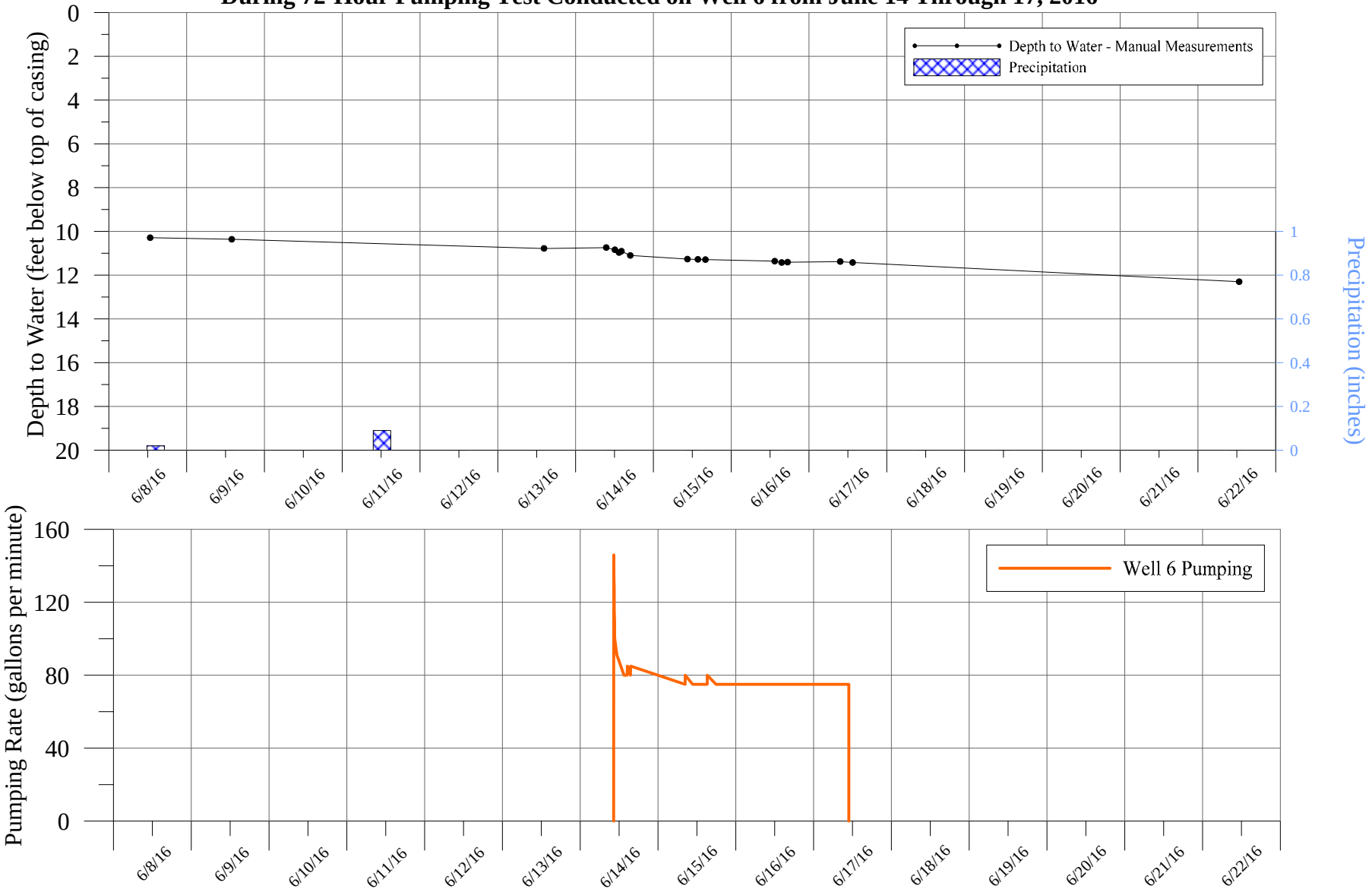

K:\Jobs\American Water Co\Wild Oaks\72-Hour Pumping Test (June 2016)\Hydrographs\Monitoring Wells\Well 1.grf

LEGGETTE, BRASHEARS & GRAHAM, INC.

NEW YORK AMERICAN WATER COMPANY
WILD OAKS WATER SYSTEM
LEWISBORO, NEW YORK

Hydrograph of Water-Level Measurements Collected from Existing Production Well 2 During 72-Hour Pumping Test Conducted on Well 6 from June 14 Through 17, 2016

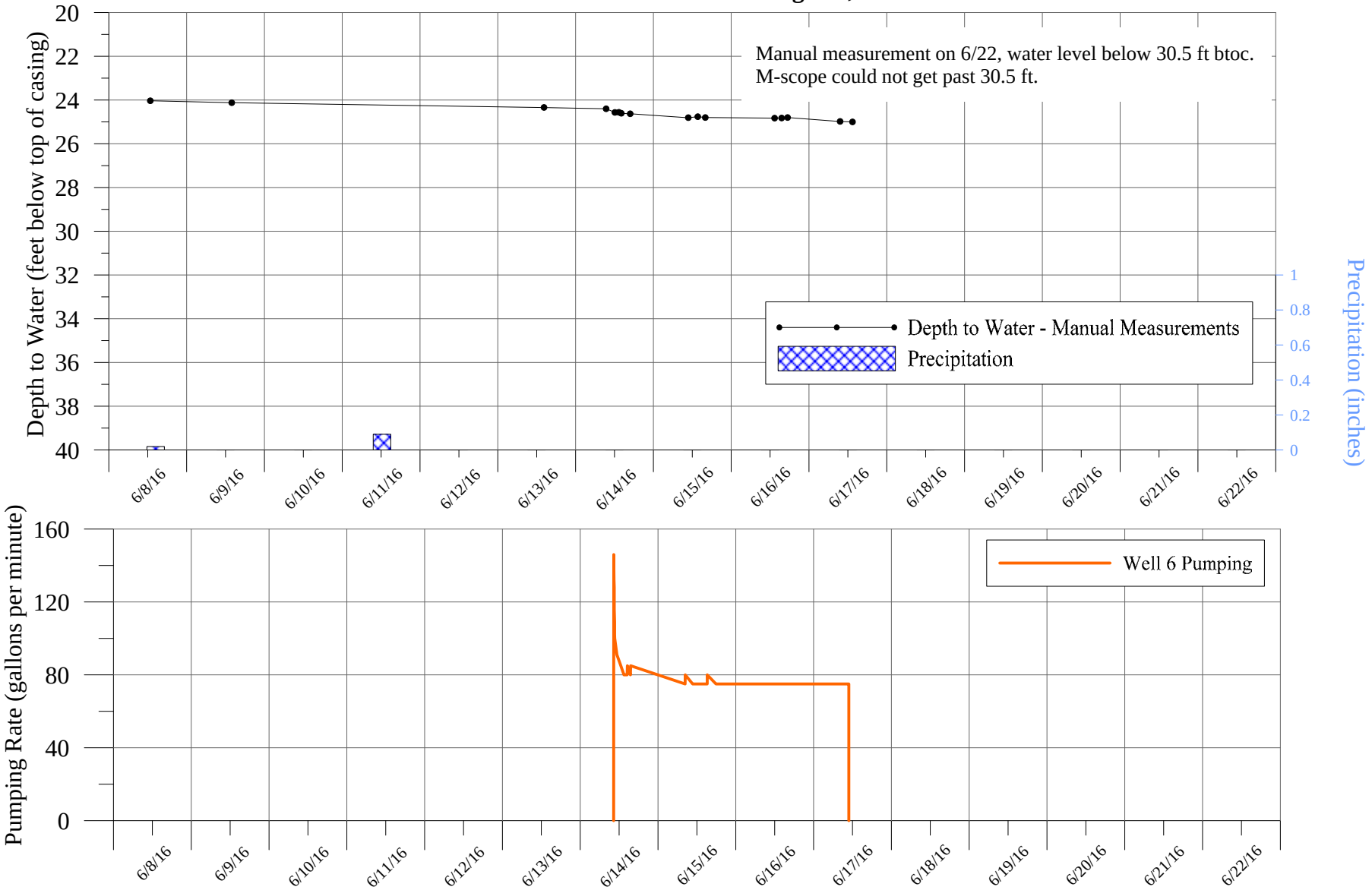

K:\Jobs\American Water Co\Wild Oaks\72-Hour Pumping Test (June 2016)\Hydrographs\Monitoring Wells\Well 2.grf

LEGGETTE, BRASHEARS & GRAHAM, INC.

NEW YORK AMERICAN WATER COMPANY
WILD OAKS WATER SYSTEM
LEWISBORO, NEW YORK

Hydrograph of Water-Level Measurements Collected from Bedrock Well 4 During 72-Hour Pumping Test Conducted on Well 6 from June 14 Through 17, 2016

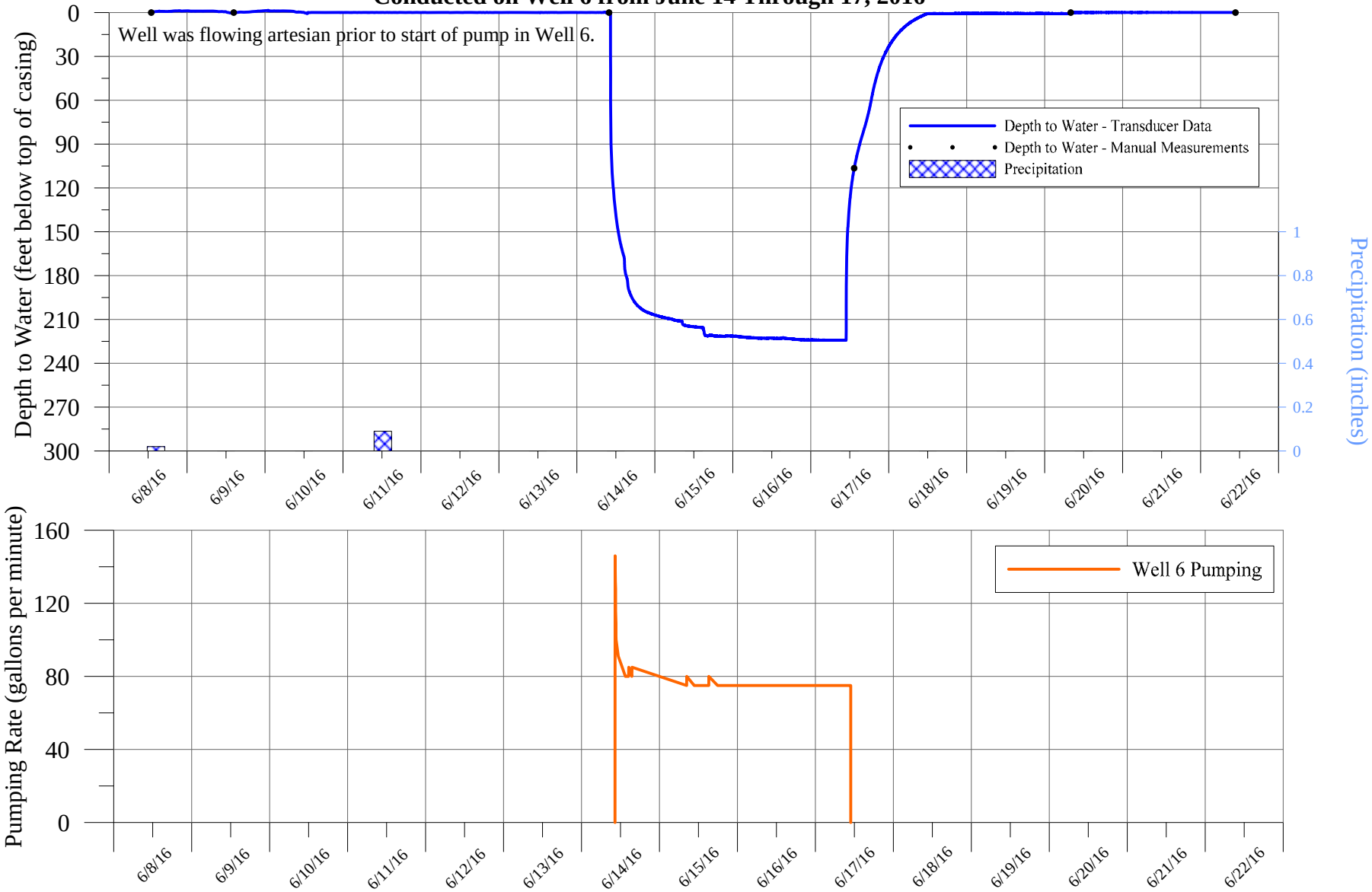

K:\Jobs\American Water Co\Wild Oaks\72-Hour Pumping Test (June 2016)\Hydrographs\Monitoring Wells\Well 4.grf

LEGGETTE, BRASHEARS & GRAHAM, INC.

NEW YORK AMERICAN WATER COMPANY
WILD OAKS WATER SYSTEM
LEWISBORO, NEW YORK

Hydrograph of Water-Level Measurements Collected from Bedrock Well 5 During 72-Hour Pumping Test Conducted on Well 6 from June 14 Through 17, 2016

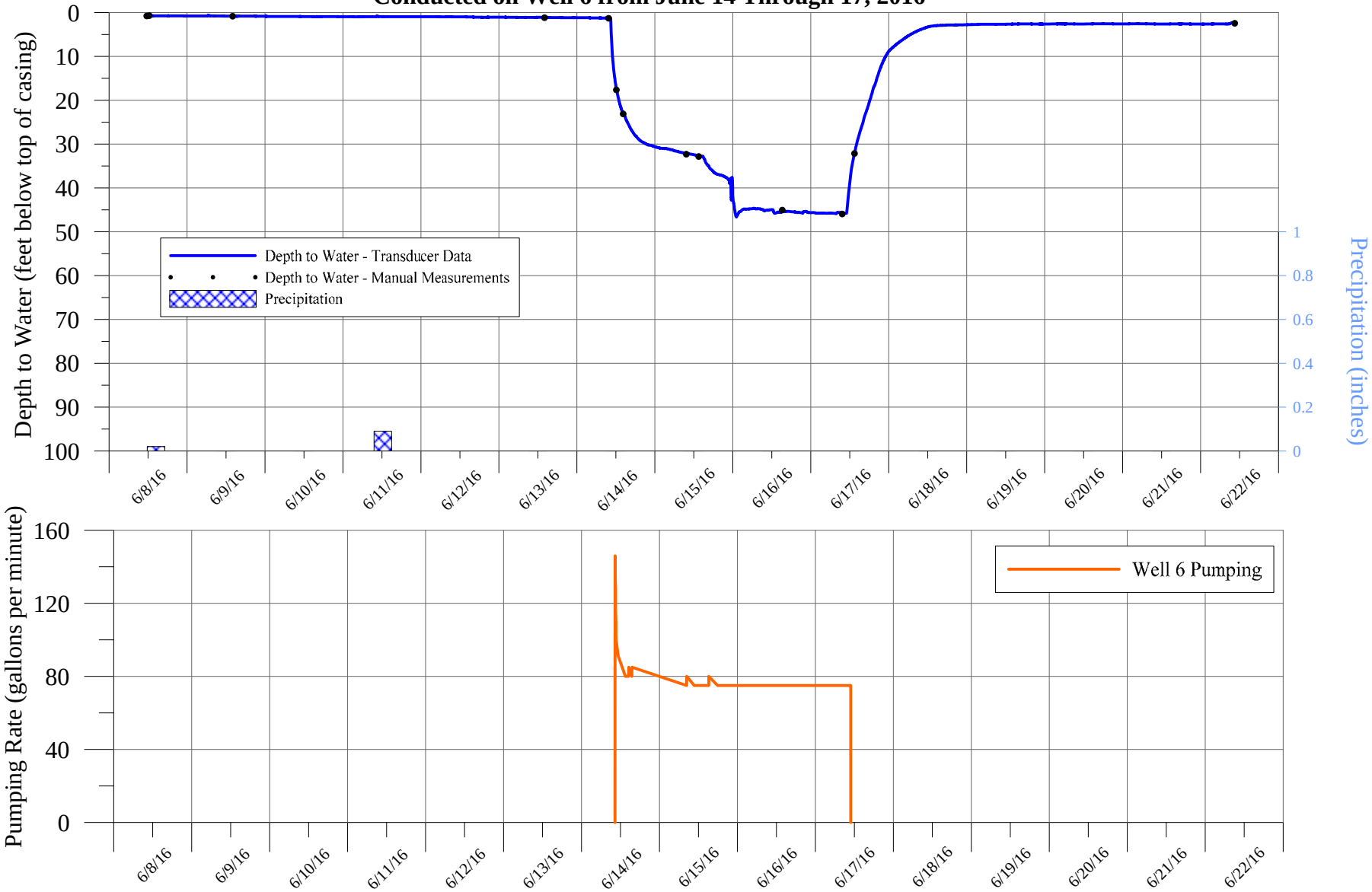

K:\Jobs\American Water Co\Wild Oaks\72-Hour Pumping Test (June 2016)\Hydrographs\Monitoring Wells\Well 5.grf

LEGGETTE, BRASHEARS & GRAHAM, INC.

NEW YORK AMERICAN WATER COMPANY
WILD OAKS WATER SYSTEM
LEWISBORO, NEW YORK

Hydrograph of Water-Level Measurements Collected from Overburden MW-1 During 72-Hour Pumping Test Conducted on Well 6 from June 14 Through 17, 2016

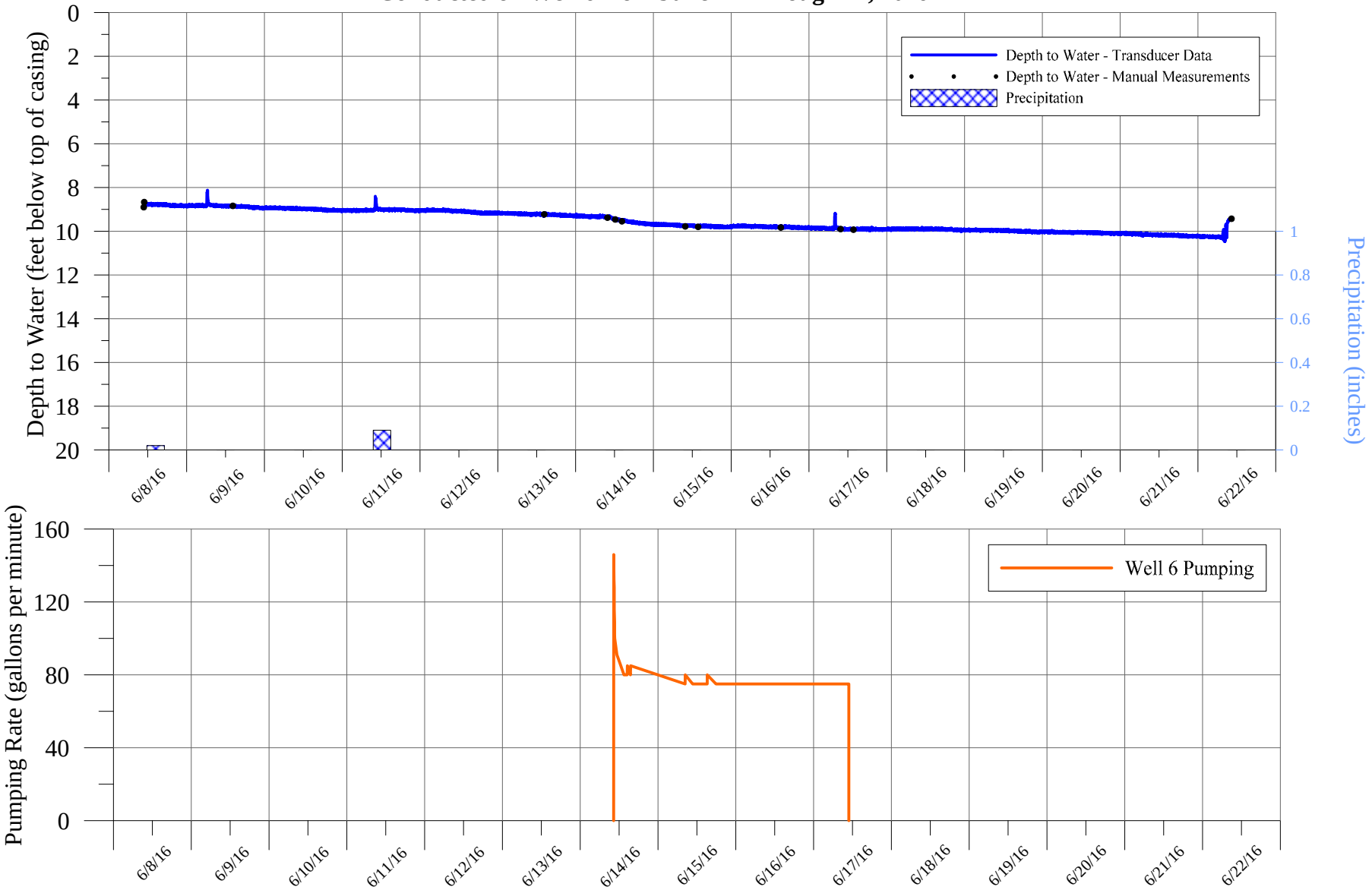

K:\Jobs\American Water Co\Wild Oaks\72-Hour Pumping Test (June 2016)\Hydrographs\Monitoring Wells\MW-1_.grf

LEGGETTE, BRASHEARS & GRAHAM, INC.

NEW YORK AMERICAN WATER COMPANY
WILD OAKS WATER SYSTEM
LEWISBORO, NEW YORK

Hydrograph of Water-Level Measurements Collected from Overburden MW-2 During 72-Hour Pumping Test Conducted on Well 6 from June 14 Through 17, 2016

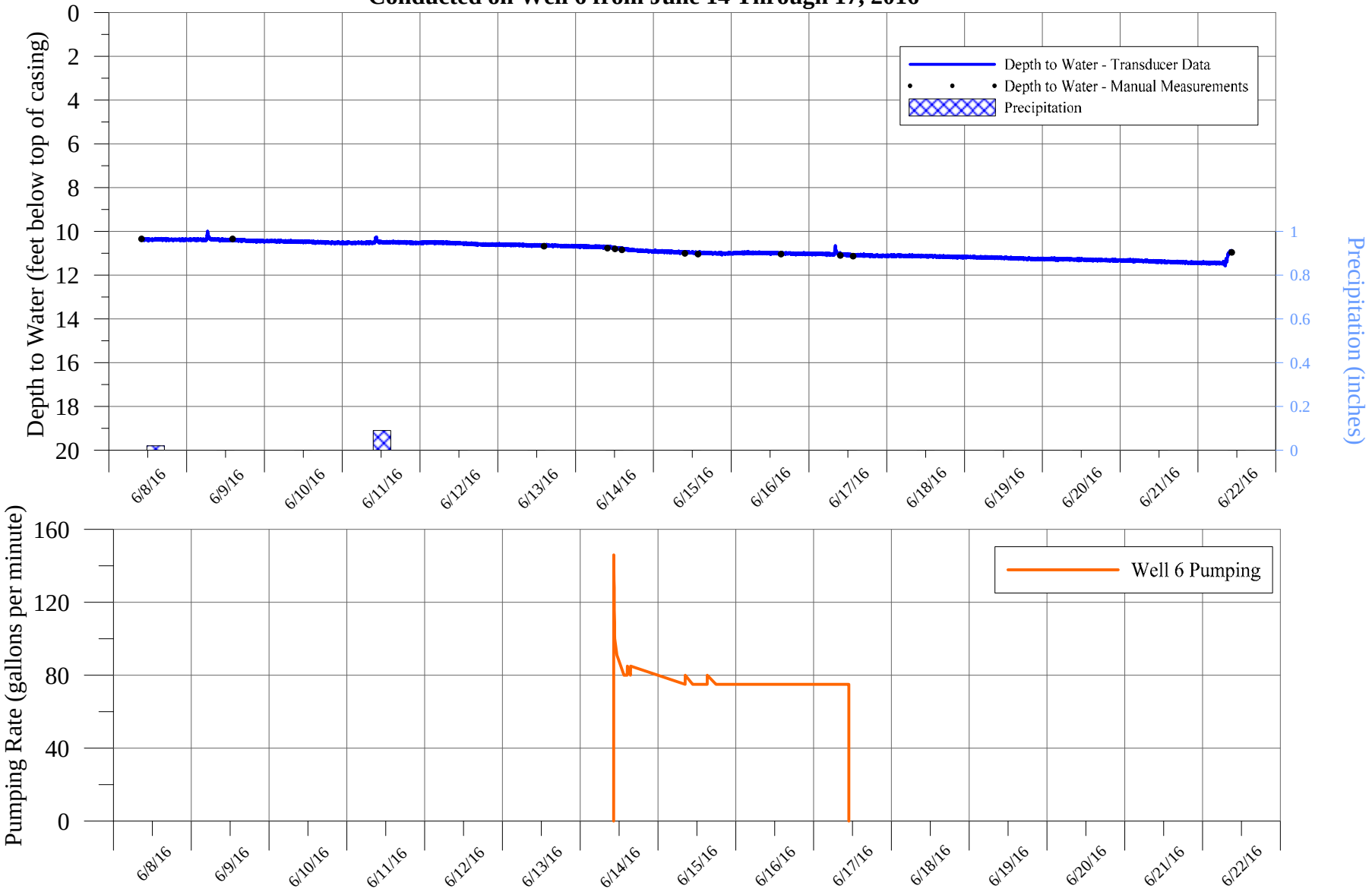

K:\Jobs\American Water Co\Wild Oaks\72-Hour Pumping Test (June 2016)\Hydrographs\Monitoring Wells\MW-2_.grf

LEGGETTE, BRASHEARS & GRAHAM, INC.

NEW YORK AMERICAN WATER COMPANY
WILD OAKS WATER SYSTEM
LEWISBORO, NEW YORK

Hydrograph of Water-Level Measurements Collected from Overburden MW-3 During 72-Hour Pumping Test Conducted on Well 6 from June 14 Through 17, 2016

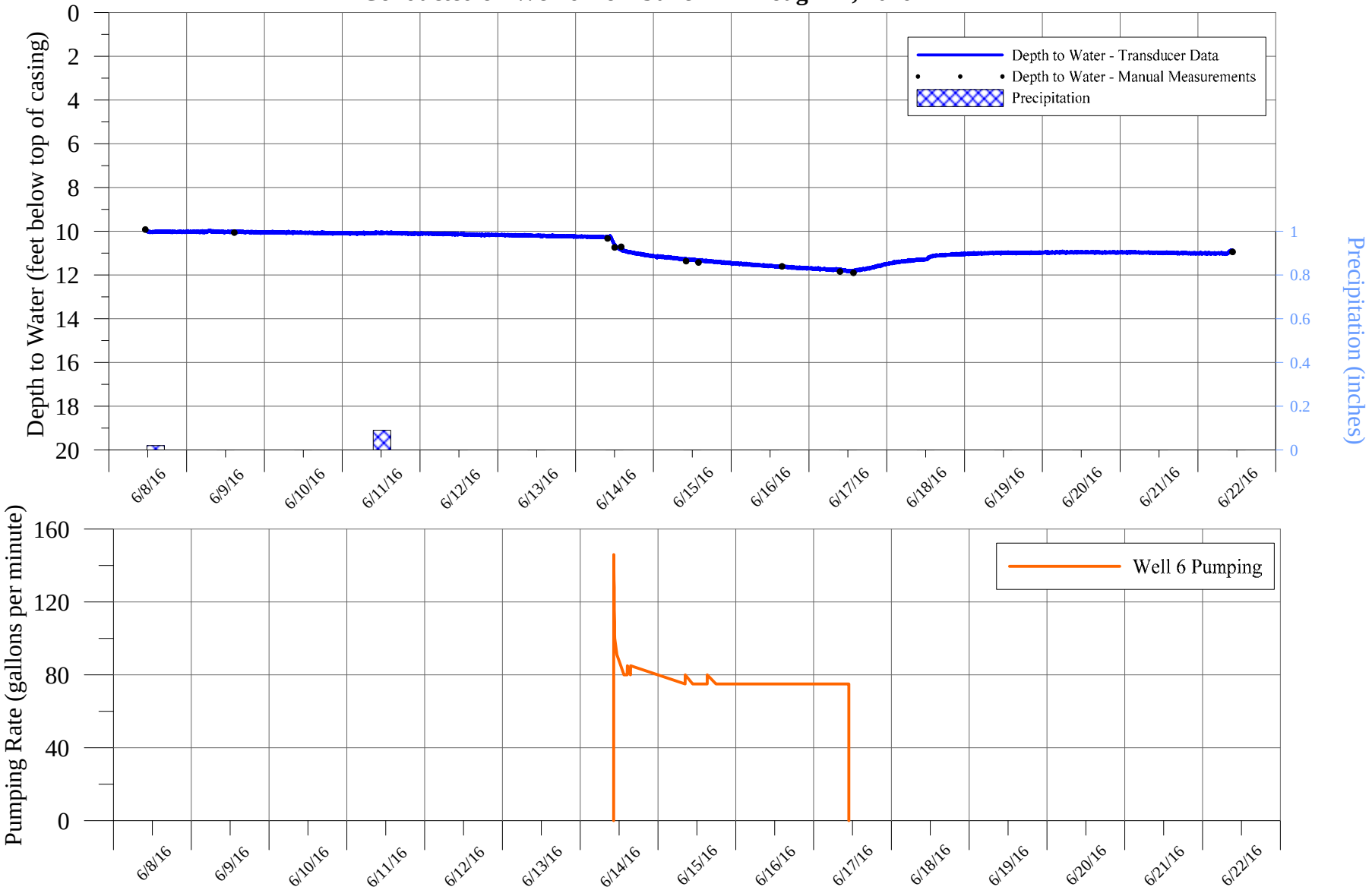

K:\Jobs\American Water Co\Wild Oaks\72-Hour Pumping Test (June 2016)\Hydrographs\Monitoring Wells\MW-3.grf

LEGGETTE, BRASHEARS & GRAHAM, INC.

NEW YORK AMERICAN WATER COMPANY
WILD OAKS WATER SYSTEM
LEWISBORO, NEW YORK

Summary of Manual Water-Level Measurements Collected from Onsite and Offsite Wells Monitored During 72-Hour Pumping Test Conducted on Well 6, June 14 Through June 17, 2016

Date	Time	Depth to Water (ft btoc)
Well 1		
6/8/2016	12:47	10.29
6/9/2016	13:56	10.36
6/13/2016	14:18	10.78
6/14/2016	9:30	10.74
6/14/2016	12:10	10.84
6/14/2016	13:24	10.97
6/14/2016	14:10	10.91
6/14/2016	16:55	11.10
6/15/2016	10:30	11.27
6/15/2016	13:45	11.28
6/15/2016	16:07	11.29
6/16/2016	13:28	11.36
6/16/2016	15:34	11.42
6/16/2016	17:27	11.41
6/17/2016	9:41	11.38
6/17/2016	13:29	11.42
6/22/2016	12:45	12.30
Well 2		
6/8/2016	12:50	24.03
6/9/2016	13:55	24.12
6/13/2016	14:16	24.34
6/14/2016	9:27	24.40
6/14/2016	12:08	24.57
6/14/2016	13:22	24.56
6/14/2016	14:08	24.61
6/14/2016	16:53	24.63
6/15/2016	10:46	24.81
6/15/2016	13:43	24.76
6/15/2016	16:04	24.80
6/16/2016	13:26	24.83
6/16/2016	15:35	24.82
6/16/2016	17:26	24.80
6/17/2016	9:39	24.98
6/17/2016	13:26	25.00
6/22/2016	12:43	Dry to 30.5 ft
Well 4		
6/8/2016	13:00	Flowing
6/9/2016	14:24	Flowing
6/14/2016	9:56	Flowing
6/17/2016	13:21	106.47
6/20/2016	8:03	Flowing
6/22/2016	10:47	Flowing
Well 5		
6/8/2016	11:36	0.77
6/8/2016	12:24	0.69
6/9/2016	14:04	0.85
6/13/2016	14:03	1.16
6/14/2016	9:47	1.30
6/14/2016	12:11	17.62
6/14/2016	14:16	23.09

NEW YORK AMERICAN WATER COMPANY
WILD OAKS WATER SYSTEM
LEWISBORO, NEW YORK

Summary of Manual Water-Level Measurements Collected from Onsite and Offsite Wells Monitored During 72-Hour Pumping Test Conducted on Well 6, June 14 Through June 17, 2016

Date	Time	Depth to Water (ft btoc)
Well 5 (continued)		
6/15/2016	9:41	32.31
6/15/2016	13:33	32.83
6/16/2016	15:15	45.08
6/17/2016	9:43	45.95
6/17/2016	13:31	32.14
6/22/2016	10:33	2.43
MW-1		
6/8/2016	10:47	8.90
6/8/2016	10:56	8.67
6/9/2016	14:19	8.84
6/13/2016	14:22	9.23
6/14/2016	9:50	9.38
6/14/2016	12:15	9.46
6/14/2016	14:19	9.55
6/15/2016	9:50	9.78
6/15/2016	13:51	9.80
6/16/2016	15:20	9.83
6/17/2016	9:46	9.90
6/17/2016	13:45	9.93
6/22/2016	10:22	9.43
MW-2		
6/8/2016	10:07	10.35
6/9/2016	14:11	10.35
6/13/2016	14:17	10.68
6/14/2016	9:52	10.77
6/14/2016	12:13	10.80
6/14/2016	14:18	10.85
6/15/2016	9:44	11.01
6/15/2016	13:49	11.04
6/16/2016	15:24	11.04
6/17/2016	9:44	11.10
6/17/2016	13:37	11.13
6/22/2016	10:28	10.96
MW-3		
6/8/2016	11:19	9.92
6/9/2016	14:44	10.06
6/14/2016	9:55	10.33
6/14/2016	12:04	10.74
6/14/2016	14:05	10.71
6/15/2016	10:07	11.37
6/15/2016	13:56	11.43
6/16/2016	15:42	11.61
6/17/2016	9:36	11.85
6/17/2016	13:45	11.90
6/22/2016	10:43	10.95

ft btoc feet below top of casing

APPENDIX VI

PIEZOMETERS

PIEZOMETERS

MAY 2015

NEW YORK AMERICAN WATER COMPANY
WILD OAKS WATER SYSTEM
LEWISBORO, NEW YORK

Hydrograph of Water-Level Measurements Collected from PZ-A During 72-Hour Pumping Test Program Conducted on Well 4 and Well 5 from May 18 Through May 30, 2015

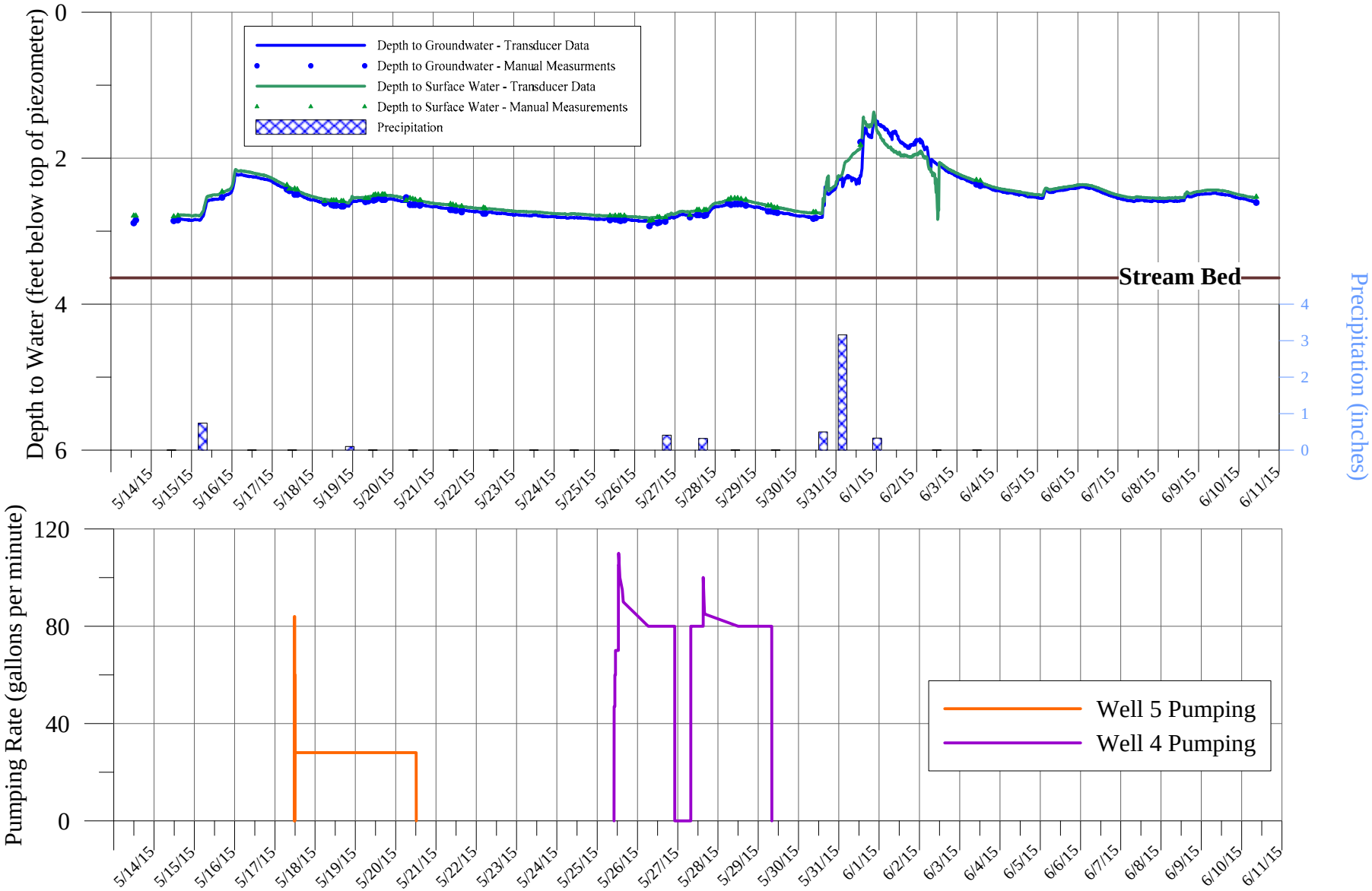

K:\Jobs\American Water Co\Wild Oak\72-Hour Pumping Test (May 2015)\Hydrographs\Piezometers\PZ-A.grf

LEGGETTE, BRASHEARS & GRAHAM, INC.

NEW YORK AMERICAN WATER COMPANY
WILD OAKS WATER SYSTEM
LEWISBORO, NEW YORK

Hydrograph of Water-Level Measurements Collected from PZ-B During 72-Hour Pumping Test Program Conducted on Well 4 and Well 5 from May 18 Through May 30, 2015

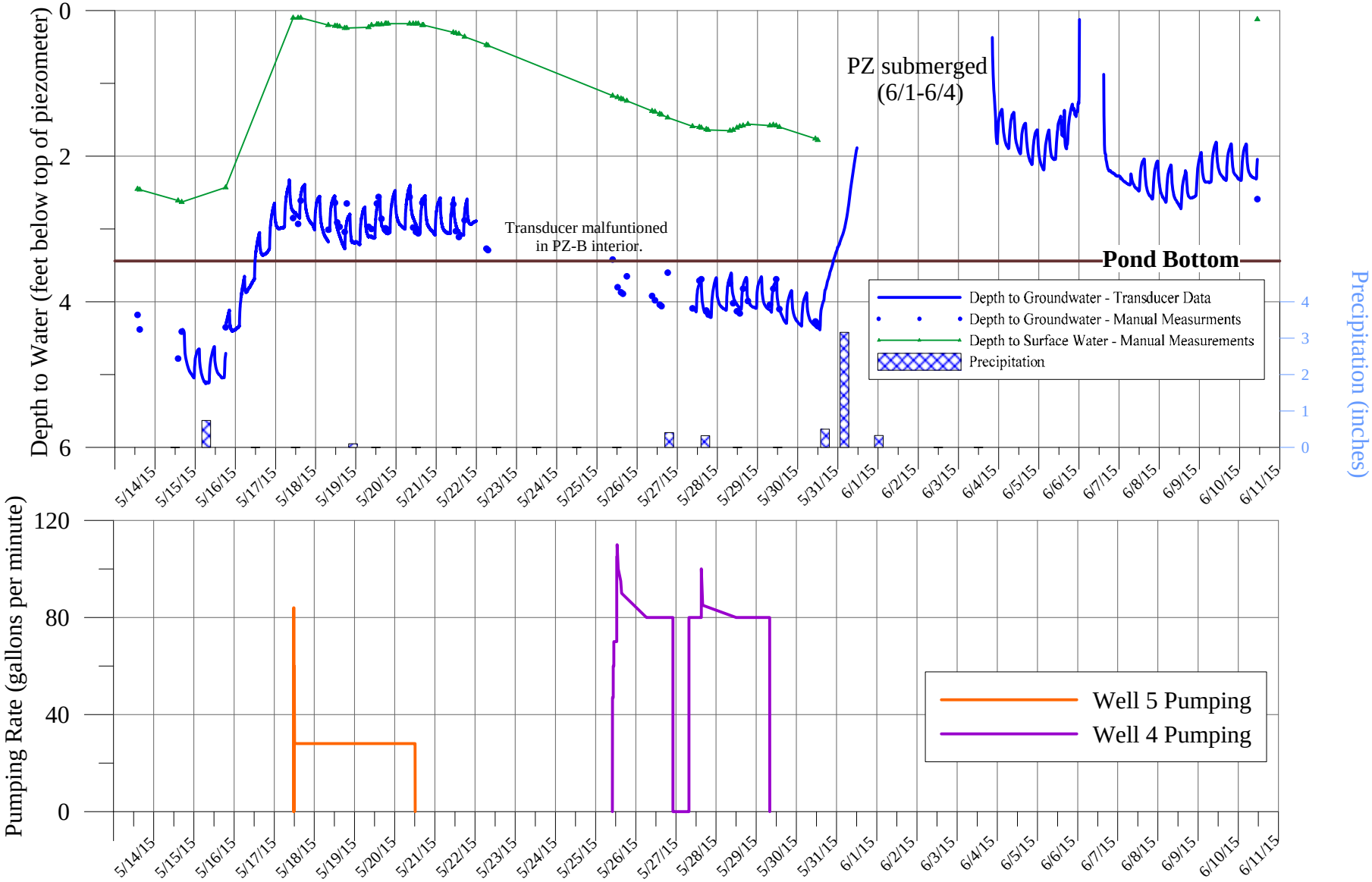

K:\Jobs\American Water Co\Wild Oak\72-Hour Pumping Test (May 2015)\Hydrographs\Piezometers\PZ-B.grf

LEGGETTE, BRASHEARS & GRAHAM, INC.

NEW YORK AMERICAN WATER COMPANY
WILD OAKS WATER SYSTEM
LEWISBORO, NEW YORK

Hydrograph of Water-Level Measurements Collected from PZ-C During 72-Hour Pumping Test Program Conducted on Well 4 and Well 5 from May 18 Through May 30, 2015

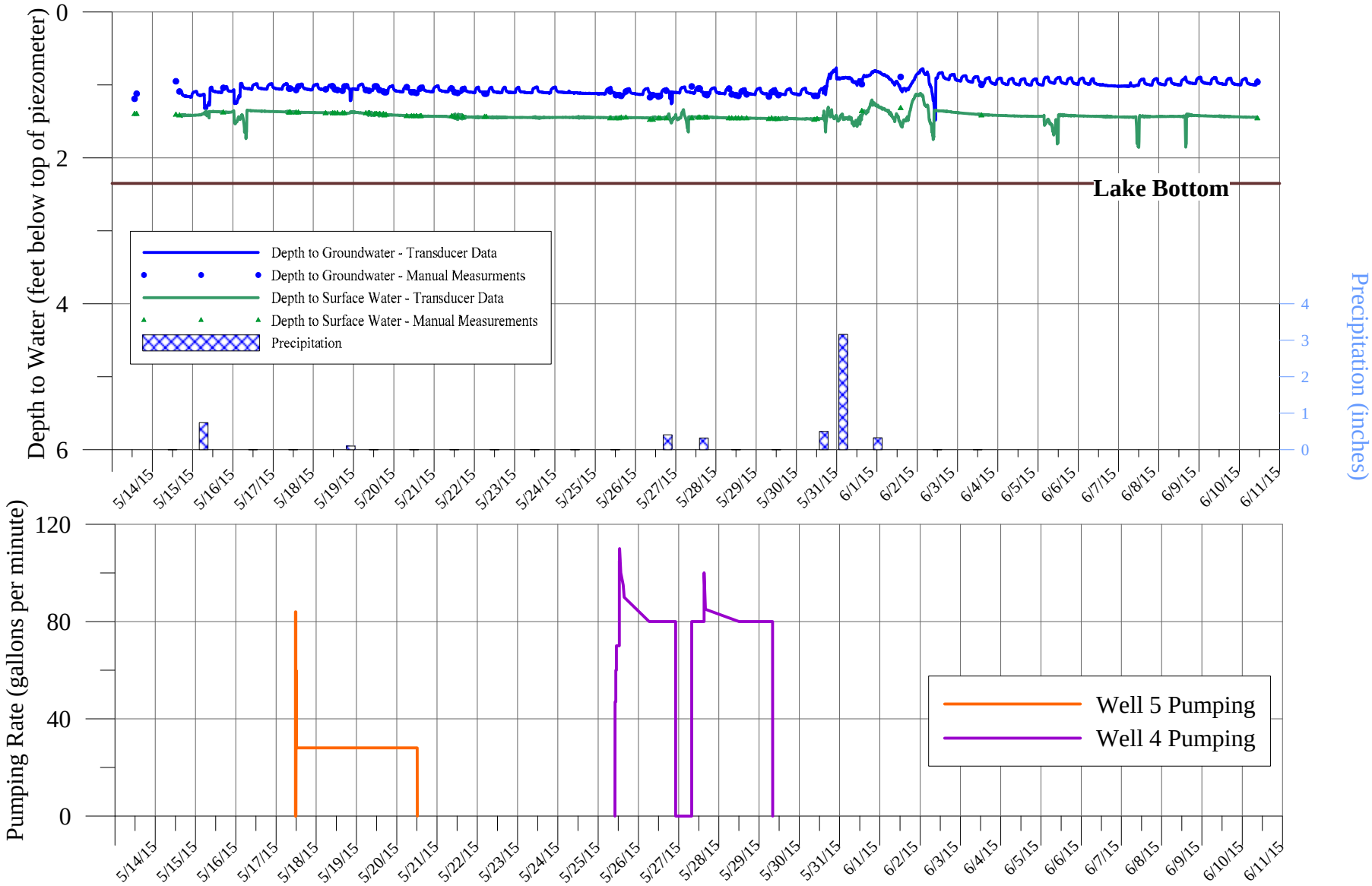

K:\Jobs\American Water Co\Wild Oak\72-Hour Pumping Test (May 2015)\Hydrographs\Piezometers\PZ-C.grf

LEGGETTE, BRASHEARS & GRAHAM, INC.

NEW YORK AMERICAN WATER COMPANY
WILD OAKS WATER SYSTEM
LEWISBORO, NEW YORK

Hydrograph of Water-Level Measurements Collected from PZ-D During 72-Hour Pumping Test Program Conducted on Well 4 and Well 5 from May 18 Through May 30, 2015

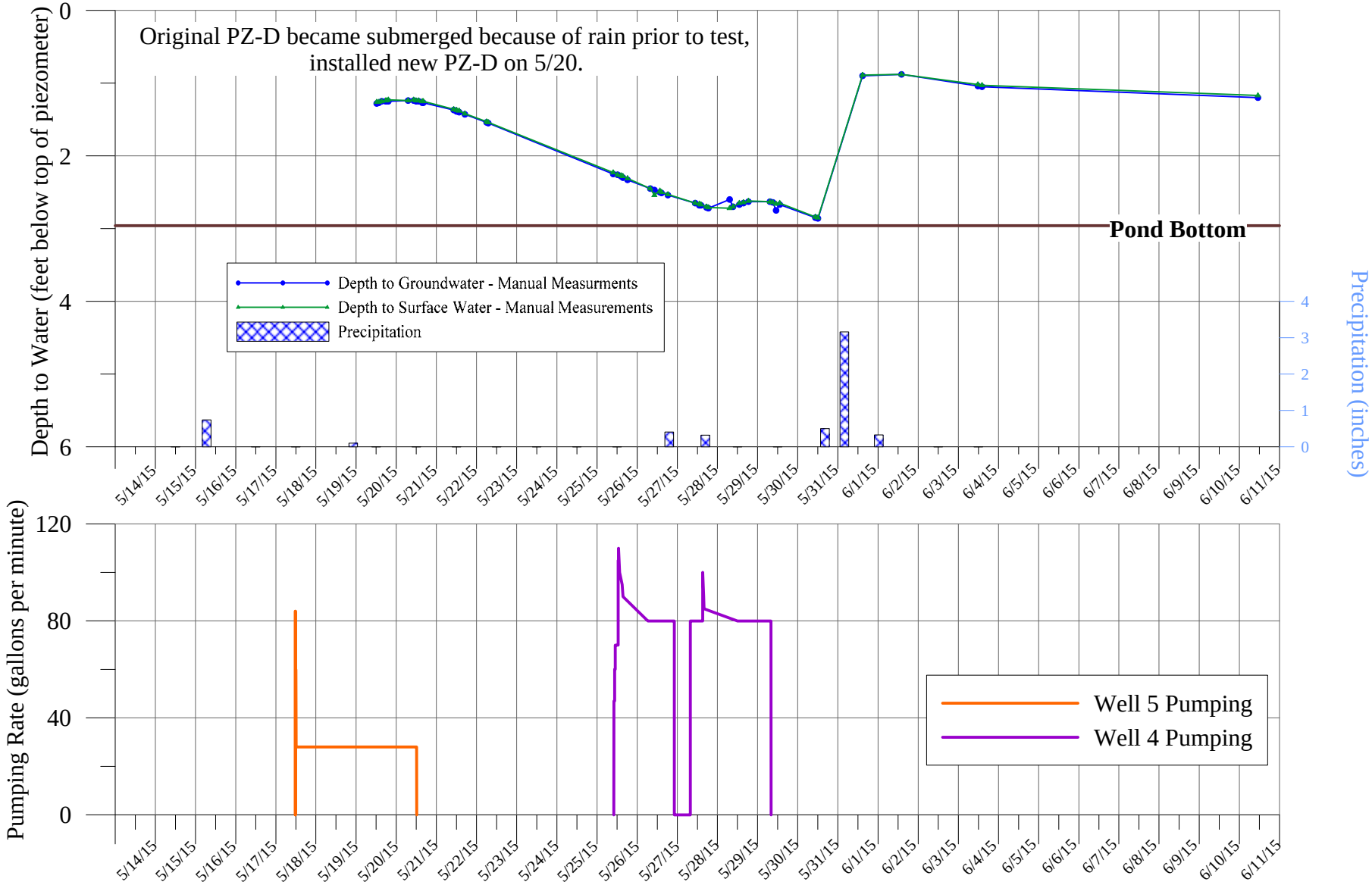

K:\Jobs\American Water Co\Wild Oak\72-Hour Pumping Test (May 2015)\Hydrographs\Piezometers\PZ-D.grf

LEGGETTE, BRASHEARS & GRAHAM, INC.

NEW YORK AMERICAN WATER COMPANY
WILD OAKS WATER SYSTEM
LEWISBORO, NEW YORK

Hydrograph of Water-Level Measurements Collected from PZ-E During 72-Hour Pumping Test Program Conducted on Well 4 and Well 5 from May 18 Through May 30, 2015

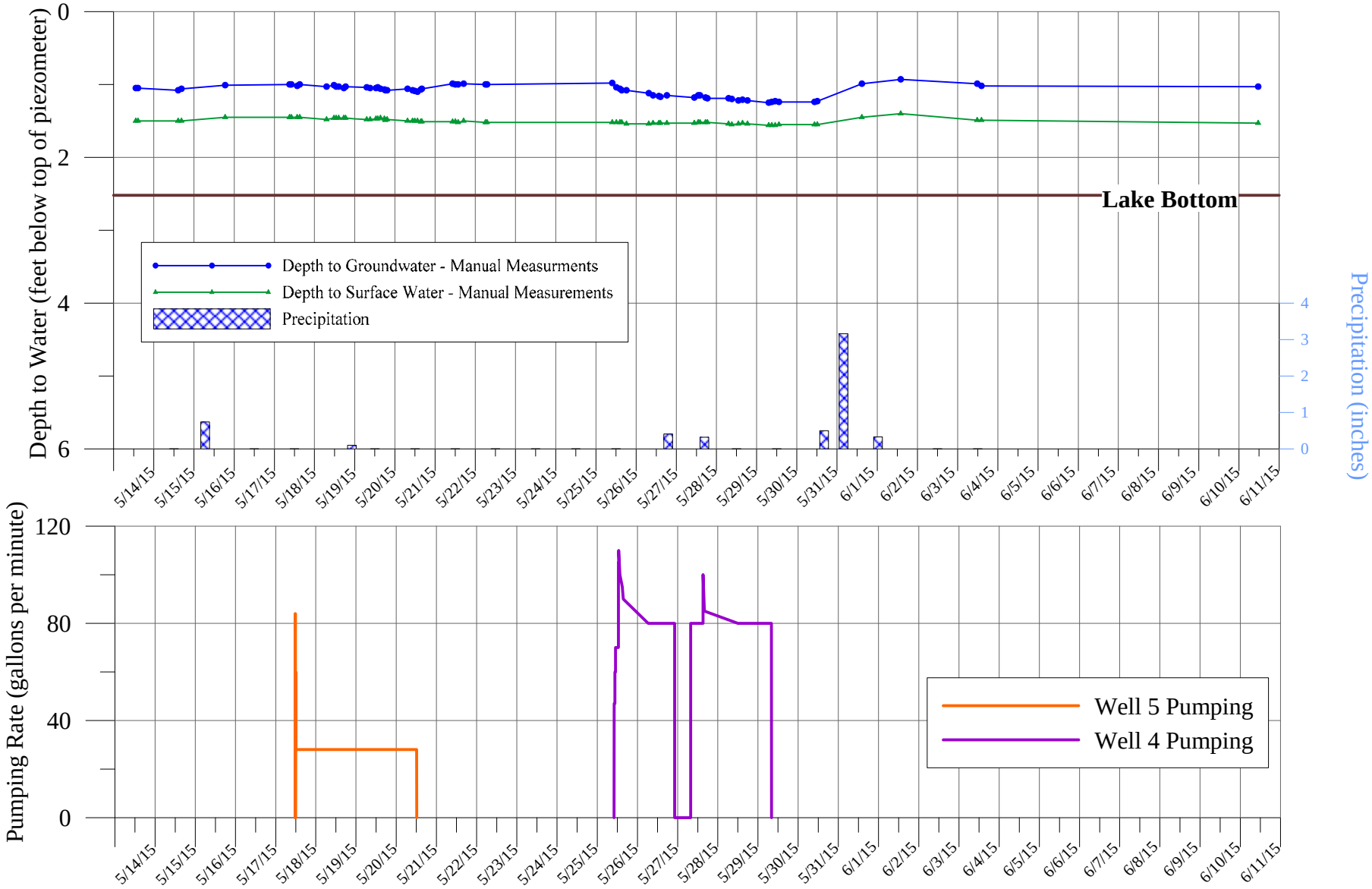

K:\Jobs\American Water Co\Wild Oak\72-Hour Pumping Test (May 2015)\Hydrographs\Piezometers\PZ-E.grf

LEGGETTE, BRASHEARS & GRAHAM, INC.

NEW YORK AMERICAN WATER COMPANY
WILD OAKS WATER SYSTEM
LEWISBORO, NEW YORK

Hydrograph of Water-Level Measurements Collected from PZ-F During 72-Hour Pumping Test Conducted on Well 6 from June 14 Through 17, 2016

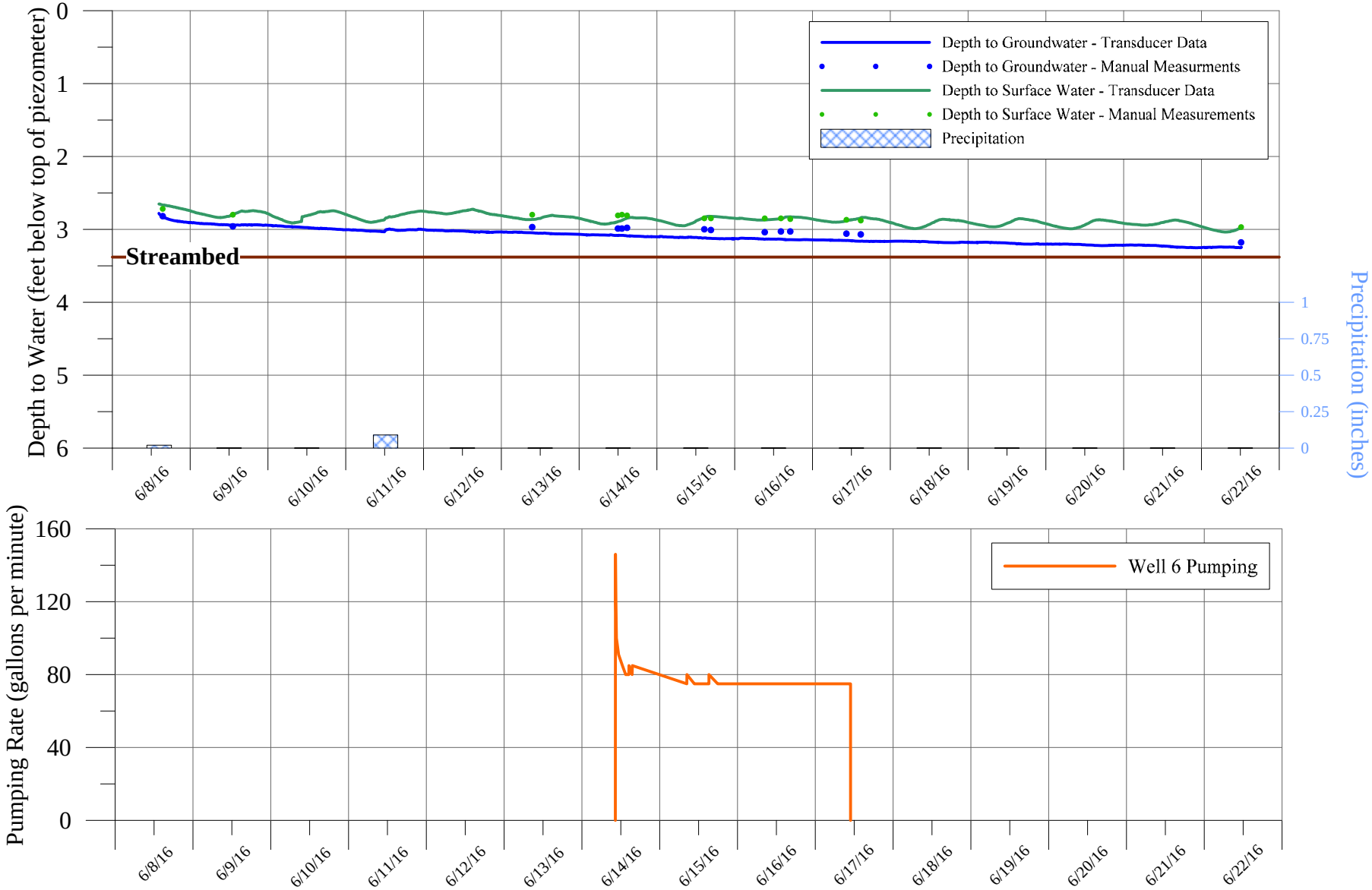

K:\Jobs\American Water Co\Wild Oaks\72-Hour Pumping Test (June 2016)\Hydrographs\Piezometers\PZ-F.grf

LEGGETTE, BRASHEARS & GRAHAM, INC.

NEW YORK AMERICAN WATER COMPANY
WILD OAKS WATER SYSTEM
LEWISBORO, NEW YORK

Manual Water-Level Measurements Collected from the Onsite Piezometers During 72-Hour Pumping Tests Conducted on Wells 4 and 5, May 18 Through May 30, 2015

Date	Time	Depth to Water – Groundwater (ft btoc)	Depth to Water – Surface Water (ft btoc)	Gradient (surface water – groundwater)	Gradient Direction
PZ-A					
5/14/2015	13:32	2.89	2.79	-0.10	Downward
5/14/2015	14:45	2.85	2.79	-0.06	Downward
5/15/2015	13:22	2.86	2.80	-0.06	Downward
5/15/2015	15:54	2.85	2.79	-0.06	Downward
5/16/2015	18:12	2.54	2.46	-0.08	Downward
5/18/2015	8:52	2.43	2.37	-0.06	Downward
5/18/2015	10:24	2.45	2.42	-0.03	Downward
5/18/2015	13:30	2.50	2.42	-0.08	Downward
5/18/2015	15:02	2.50	2.43	-0.07	Downward
5/19/2015	7:24	2.62	2.59	-0.03	Downward
5/19/2015	11:28	2.64	2.58	-0.06	Downward
5/19/2015	12:47	2.65	2.58	-0.07	Downward
5/19/2015	14:16	2.65	2.58	-0.07	Downward
5/19/2015	17:18	2.66	2.59	-0.07	Downward
5/19/2015	18:31	2.66	2.59	-0.07	Downward
5/20/2015	7:36	2.60	2.55	-0.05	Downward
5/20/2015	9:18	2.59	2.55	-0.04	Downward
5/20/2015	12:32	2.58	2.51	-0.07	Downward
5/20/2015	13:33	2.57	2.50	-0.07	Downward
5/20/2015	15:14	2.55	2.50	-0.05	Downward
5/20/2015	17:34	2.57	2.50	-0.07	Downward
5/20/2015	18:12	2.57	2.50	-0.07	Downward
5/20/2015	19:14	2.57	2.50	-0.07	Downward
5/21/2015	7:53	2.54	2.58	0.04	Upward
5/21/2015	10:15	2.64	2.55	-0.09	Downward
5/21/2015	11:51	2.64	2.56	-0.08	Downward
5/21/2015	13:19	2.64	2.57	-0.07	Downward
5/21/2015	15:58	2.65	2.58	-0.07	Downward
5/21/2015	16:29	2.64	2.58	-0.06	Downward
5/22/2015	10:15	2.71	2.63	-0.08	Downward
5/22/2015	11:45	2.71	2.64	-0.07	Downward
5/22/2015	13:33	2.72	2.65	-0.07	Downward
5/22/2015	16:56	2.74	2.66	-0.08	Downward
5/23/2015	5:57	2.76	2.68	-0.08	Downward
5/23/2015	6:59	2.76	2.69	-0.07	Downward
5/26/2015	9:20	2.85	2.79	-0.06	Downward
5/26/2015	12:29	2.84	2.79	-0.05	Downward
5/26/2015	14:33	2.85	2.79	-0.06	Downward
5/26/2015	15:40	2.86	2.79	-0.07	Downward
5/26/2015	17:53	2.85	2.79	-0.06	Downward
5/27/2015	8:52	2.93	2.86	-0.07	Downward
5/27/2015	10:38	2.88	2.85	-0.03	Downward
5/27/2015	13:33	2.89	2.81	-0.08	Downward
5/27/2015	14:46	2.88	2.81	-0.07	Downward
5/27/2015	18:17	2.87	2.81	-0.06	Downward
5/28/2015	8:55	2.81	2.78	-0.03	Downward

NEW YORK AMERICAN WATER COMPANY
WILD OAKS WATER SYSTEM
LEWISBORO, NEW YORK

Manual Water-Level Measurements Collected from the Onsite Piezometers During 72-Hour Pumping Tests Conducted on Wells 4 and 5, May 18 Through May 30, 2015

Date	Time	Depth to Water – Groundwater (ft btoc)	Depth to Water – Surface Water (ft btoc)	Gradient (surface water – groundwater)	Gradient Direction
PZ-A (continued)					
5/28/2015	13:14	2.78	2.71	-0.07	Downward
5/28/2015	14:28	2.78	2.71	-0.07	Downward
5/28/2015	17:24	2.79	2.71	-0.08	Downward
5/28/2015	18:33	2.78	2.71	-0.07	Downward
5/29/2015	7:50	2.62	2.57	-0.05	Downward
5/29/2015	9:26	2.64	2.55	-0.09	Downward
5/29/2015	11:40	2.63	2.55	-0.08	Downward
5/29/2015	13:26	2.63	2.55	-0.08	Downward
5/29/2015	15:22	2.63	2.56	-0.07	Downward
5/29/2015	18:14	2.65	2.57	-0.08	Downward
5/30/2015	7:31	2.73	2.65	-0.08	Downward
5/30/2015	9:19	2.73	2.65	-0.08	Downward
5/30/2015	11:13	2.74	2.68	-0.06	Downward
5/30/2015	13:06	2.75	2.68	-0.07	Downward
5/31/2015	10:30	2.83	2.74	-0.09	Downward
5/31/2015	11:58	2.82	2.74	-0.08	Downward
6/1/2015	14:37	1.78	1.82	0.04	Upward
6/4/2015	11:39	2.36	2.3	-0.06	Downward
6/4/2015	14:02	2.38	2.31	-0.07	Downward
6/11/2015	10:25	2.61	2.53	-0.08	Downward
PZ-B					
5/14/2015	13:34	4.18	2.45	-1.73	Downward
5/14/2015	14:51	4.38	2.46	-1.92	Downward
5/15/2015	13:51	4.78	2.61	-2.17	Downward
5/15/2015	16:03	4.41	2.63	-1.78	Downward
5/16/2015	18:15	4.35	2.43	-1.92	Downward
5/18/2015	10:33	2.85	0.10	-2.75	Downward
5/18/2015	13:32	2.93	0.10	-2.83	Downward
5/18/2015	15:05	2.61	0.10	-2.51	Downward
5/19/2015	7:30	3.01	0.20	-2.81	Downward
5/19/2015	11:31	2.64	0.21	-2.43	Downward
5/19/2015	12:49	2.91	0.21	-2.70	Downward
5/19/2015	14:19	2.97	0.22	-2.75	Downward
5/19/2015	17:20	3.04	0.24	-2.80	Downward
5/19/2015	18:35	2.65	0.24	-2.41	Downward
5/20/2015	7:41	2.97	0.23	-2.74	Downward
5/20/2015	9:21	3.00	0.20	-2.80	Downward
5/20/2015	12:34	2.65	0.19	-2.46	Downward
5/20/2015	13:34	2.56	0.19	-2.37	Downward
5/20/2015	15:18	2.86	0.19	-2.67	Downward
5/20/2015	17:40	2.99	0.18	-2.81	Downward
5/20/2015	18:15	3.00	0.18	-2.82	Downward
5/20/2015	19:16	3.03	0.18	-2.85	Downward
5/21/2015	8:11	2.56	0.18	-2.38	Downward

NEW YORK AMERICAN WATER COMPANY
WILD OAKS WATER SYSTEM
LEWISBORO, NEW YORK

Manual Water-Level Measurements Collected from the Onsite Piezometers During 72-Hour Pumping Tests Conducted on Wells 4 and 5, May 18 Through May 30, 2015

Date	Time	Depth to Water – Groundwater (ft btoc)	Depth to Water – Surface Water (ft btoc)	Gradient (surface water – groundwater)	Gradient Direction
PZ-B (continued)					
5/21/2015	10:18	2.98	0.18	-2.80	Downward
5/21/2015	11:53	3.04	0.18	-2.86	Downward
5/21/2015	13:21	3.06	0.18	-2.88	Downward
5/21/2015	15:44	2.64	0.20	-2.44	Downward
5/21/2015	16:25	2.60	0.20	-2.40	Downward
5/22/2015	10:19	2.66	0.30	-2.36	Downward
5/22/2015	11:47	3.03	0.31	-2.72	Downward
5/22/2015	13:36	3.11	0.32	-2.79	Downward
5/22/2015	16:59	2.88	0.36	-2.52	Downward
5/23/2015	5:59	3.27	0.47	-2.80	Downward
5/23/2015	7:00	3.29	0.48	-2.81	Downward
5/26/2015	9:28	3.42	1.17	-2.25	Downward
5/26/2015	12:26	3.80	1.19	-2.61	Downward
5/26/2015	14:25	3.87	1.21	-2.66	Downward
5/26/2015	15:38	3.89	1.22	-2.67	Downward
5/26/2015	17:54	3.65	1.24	-2.41	Downward
5/27/2015	9:00	3.92	1.38	-2.54	Downward
5/27/2015	10:44	3.98	1.39	-2.59	Downward
5/27/2015	13:34	4.04	1.42	-2.62	Downward
5/27/2015	14:42	4.06	1.43	-2.63	Downward
5/27/2015	18:20	3.60	1.47	-2.13	Downward
5/28/2015	9:10	4.09	1.59	-2.50	Downward
5/28/2015	13:16	3.71	1.60	-2.11	Downward
5/28/2015	14:25	3.69	1.61	-2.08	Downward
5/28/2015	17:25	4.12	1.63	-2.49	Downward
5/28/2015	18:34	4.16	1.64	-2.52	Downward
5/29/2015	7:32	3.75	1.65	-2.10	Downward
5/29/2015	9:22	4.02	1.64	-2.38	Downward
5/29/2015	11:42	4.13	1.61	-2.52	Downward
5/29/2015	13:24	4.16	1.59	-2.57	Downward
5/29/2015	15:23	3.82	1.58	-2.24	Downward
5/29/2015	18:15	3.99	1.56	-2.43	Downward
5/30/2015	7:27	4.04	1.58	-2.46	Downward
5/30/2015	9:25	3.82	1.57	-2.25	Downward
5/30/2015	11:10	3.69	1.58	-2.11	Downward
5/30/2015	13:05	4.10	1.60	-2.50	Downward
5/31/2015	10:31	4.27	1.76	-2.51	Downward
5/31/2015	12:02	4.30	1.78	-2.52	Downward
6/11/2015	10:37	2.59	0.12	-2.47	Downward
5/14/2015	13:28	1.19	1.40	0.21	Upward
5/14/2015	14:43	1.12	1.40	0.28	Upward
5/15/2015	14:08	0.95	1.41	0.46	Upward
5/15/2015	16:13	1.09	1.42	0.33	Upward

NEW YORK AMERICAN WATER COMPANY
WILD OAKS WATER SYSTEM
LEWISBORO, NEW YORK

Manual Water-Level Measurements Collected from the Onsite Piezometers During 72-Hour Pumping Tests Conducted on Wells 4 and 5, May 18 Through May 30, 2015

Date	Time	Depth to Water – Groundwater (ft btoc)	Depth to Water – Surface Water (ft btoc)	Gradient (surface water – groundwater)	Gradient Direction
PZ-C					
5/16/2015	18:24	1.04	1.38	0.34	Upward
5/18/2015	9:34	1.05	1.38	0.33	Upward
5/18/2015	10:17	1.05	1.38	0.33	Upward
5/18/2015	13:42	1.07	1.38	0.31	Upward
5/18/2015	15:08	1.02	1.38	0.36	Upward
5/19/2015	7:20	1.06	1.39	0.33	Upward
5/19/2015	11:35	1.02	1.39	0.37	Upward
5/19/2015	12:53	1.06	1.39	0.33	Upward
5/19/2015	14:23	1.07	1.39	0.32	Upward
5/19/2015	17:23	1.08	1.39	0.31	Upward
5/19/2015	18:42	1.02	1.39	0.37	Upward
5/20/2015	7:24	1.07	1.39	0.32	Upward
5/20/2015	9:14	1.08	1.39	0.31	Upward
5/20/2015	12:43	1.02	1.40	0.38	Upward
5/20/2015	13:43	1.02	1.40	0.38	Upward
5/20/2015	15:26	1.07	1.40	0.33	Upward
5/20/2015	17:48	1.09	1.40	0.31	Upward
5/20/2015	18:22	1.10	1.42	0.32	Upward
5/20/2015	19:24	1.10	1.41	0.31	Upward
5/21/2015	7:46	1.03	1.43	0.40	Upward
5/21/2015	10:33	1.10	1.43	0.33	Upward
5/21/2015	12:01	1.10	1.43	0.33	Upward
5/21/2015	13:31	1.11	1.43	0.32	Upward
5/21/2015	15:41	1.05	1.43	0.38	Upward
5/21/2015	16:18	1.04	1.43	0.39	Upward
5/22/2015	10:31	1.05	1.43	0.38	Upward
5/22/2015	12:10	1.10	1.44	0.34	Upward
5/22/2015	14:00	1.11	1.44	0.33	Upward
5/22/2015	17:08	1.06	1.44	0.38	Upward
5/23/2015	6:09	1.12	1.44	0.32	Upward
5/23/2015	7:09	1.12	1.44	0.32	Upward
5/26/2015	9:04	1.09	1.46	0.37	Upward
5/26/2015	12:24	1.14	1.46	0.32	Upward
5/26/2015	14:23	1.14	1.46	0.32	Upward
5/26/2015	15:36	1.15	1.45	0.30	Upward
5/26/2015	18:19	1.09	1.45	0.36	Upward
5/27/2015	8:41	1.17	1.48	0.31	Upward
5/27/2015	10:24	1.14	1.48	0.34	Upward
5/27/2015	13:42	1.16	1.46	0.30	Upward
5/27/2015	14:41	1.15	1.46	0.31	Upward
5/27/2015	18:28	1.08	1.46	0.38	Upward
5/28/2015	9:36	1.02	1.46	0.44	Upward
5/28/2015	13:24	1.05	1.45	0.40	Upward

NEW YORK AMERICAN WATER COMPANY
WILD OAKS WATER SYSTEM
LEWISBORO, NEW YORK

Manual Water-Level Measurements Collected from the Onsite Piezometers During 72-Hour Pumping Tests Conducted on Wells 4 and 5, May 18 Through May 30, 2015

Date	Time	Depth to Water – Groundwater (ft btoc)	Depth to Water – Surface Water (ft btoc)	Gradient (surface water – groundwater)	Gradient Direction
PZ-C (continued)					
5/28/2015	14:23	1.05	1.45	0.40	Upward
5/28/2015	17:34	1.13	1.45	0.32	Upward
5/28/2015	18:42	1.14	1.45	0.31	Upward
5/29/2015	7:50	1.05	1.46	0.41	Upward
5/29/2015	9:26	1.13	1.46	0.33	Upward
5/29/2015	11:46	1.14	1.46	0.32	Upward
5/29/2015	13:22	1.15	1.46	0.31	Upward
5/29/2015	15:26	1.09	1.46	0.37	Upward
5/29/2015	18:23	1.13	1.46	0.33	Upward
5/30/2015	7:37	1.16	1.47	0.31	Upward
5/30/2015	9:14	1.10	1.46	0.36	Upward
5/30/2015	11:18	1.10	1.47	0.37	Upward
5/30/2015	13:15	1.14	1.47	0.33	Upward
5/31/2015	10:39	1.15	1.48	0.33	Upward
5/31/2015	12:20	1.15	1.47	0.32	Upward
6/1/2015	14:59	0.99	1.36	0.37	Upward
6/2/2015	14:10	0.89	1.32	0.43	Upward
6/4/2015	14:23	1.00	1.42	0.42	Upward
6/11/2015	10:50	0.96	1.46	0.50	Upward
PZ-D					
5/20/2015	12:20	1.28	1.26	-0.02	Downward
5/20/2015	13:37	1.27	1.26	-0.01	Downward
5/20/2015	15:20	1.25	1.25	0.00	Neutral
5/20/2015	17:43	1.25	1.24	-0.01	Downward
5/20/2015	18:17	1.25	1.24	-0.01	Downward
5/20/2015	19:19	1.25	1.23	-0.02	Downward
5/21/2015	7:09	1.24	1.24	0.00	Neutral
5/21/2015	10:26	1.24	1.23	-0.01	Downward
5/21/2015	11:55	1.25	1.24	-0.01	Downward
5/21/2015	13:25	1.25	1.24	-0.01	Downward
5/21/2015	15:35	1.27	1.25	-0.02	Downward
5/21/2015	16:09	1.27	1.25	-0.02	Downward
5/22/2015	10:23	1.37	1.36	-0.01	Downward
5/22/2015	12:05	1.39	1.37	-0.02	Downward
5/22/2015	13:40	1.40	1.38	-0.02	Downward
5/22/2015	17:02	1.43	1.42	-0.01	Downward
5/23/2015	6:02	1.54	1.53	-0.01	Downward
5/23/2015	7:03	1.55	1.54	-0.01	Downward
5/26/2015	9:43	2.25	2.23	-0.02	Downward
5/26/2015	12:19	2.26	2.26	0.00	Neutral
5/26/2015	14:20	2.28	2.27	-0.01	Downward
5/26/2015	15:34	2.30	2.28	-0.02	Downward
5/26/2015	18:17	2.33	2.31	-0.02	Downward

NEW YORK AMERICAN WATER COMPANY
WILD OAKS WATER SYSTEM
LEWISBORO, NEW YORK

Manual Water-Level Measurements Collected from the Onsite Piezometers During 72-Hour Pumping Tests Conducted on Wells 4 and 5, May 18 Through May 30, 2015

Date	Time	Depth to Water – Groundwater (ft btoc)	Depth to Water – Surface Water (ft btoc)	Gradient (surface water – groundwater)	Gradient Direction
PZ-D (continued)					
5/27/2015	7:52	2.45	2.45	0.00	Neutral
5/27/2015	10:19	2.47	2.54	0.07	Downward
5/27/2015	13:37	2.50	2.48	-0.02	Downward
5/27/2015	14:38	2.51	2.50	-0.01	Downward
5/27/2015	18:23	2.54	2.53	-0.01	Downward
5/28/2015	10:40	2.65	2.65	0.00	Neutral
5/28/2015	13:11	2.68	2.66	-0.02	Downward
5/28/2015	14:11	2.68	2.67	-0.01	Downward
5/28/2015	17:29	2.71	2.70	-0.01	Downward
5/28/2015	18:37	2.72	2.71	-0.01	Downward
5/29/2015	7:17	2.60	2.72	0.12	Downward
5/29/2015	9:18	2.70	2.70	0.00	Neutral
5/29/2015	13:09	2.67	2.65	-0.02	Downward
5/29/2015	15:33	2.65	2.64	-0.01	Downward
5/29/2015	18:31	2.63	2.62	-0.01	Downward
5/30/2015	7:23	2.63	2.63	0.00	Neutral
5/30/2015	9:07	2.64	2.64	0.00	Neutral
5/30/2015	11:06	2.75	2.66	-0.09	Downward
5/30/2015	13:17	2.67	2.65	-0.02	Downward
5/31/2015	10:34	2.85	2.84	-0.01	Downward
5/31/2015	12:08	2.86	2.85	-0.01	Downward
6/1/2015	14:45	0.90	0.89	-0.01	Downward
6/2/2015	14:04	0.88	0.88	0.00	Neutral
6/4/2015	11:43	1.04	1.02	-0.02	Downward
6/4/2015	14:10	1.05	1.03	-0.02	Downward
6/11/2015	11:08	1.20	1.17	-0.03	Downward
PZ-E					
5/14/2015	13:20	1.05	1.50	0.45	Upward
5/14/2015	14:38	1.05	1.50	0.45	Upward
5/15/2015	14:38	1.08	1.50	0.42	Upward
5/15/2015	16:32	1.06	1.50	0.44	Upward
5/16/2015	18:36	1.01	1.45	0.44	Upward
5/18/2015	9:05	1.00	1.45	0.45	Upward
5/18/2015	10:08	1.00	1.45	0.45	Upward
5/18/2015	13:36	1.02	1.45	0.43	Upward
5/18/2015	15:13	1.00	1.45	0.45	Upward
5/19/2015	7:12	1.03	1.48	0.45	Upward
5/19/2015	11:40	1.01	1.46	0.45	Upward
5/19/2015	12:57	1.03	1.46	0.43	Upward
5/19/2015	14:27	1.03	1.46	0.43	Upward
5/19/2015	17:27	1.05	1.46	0.41	Upward
5/19/2015	18:38	1.03	1.46	0.43	Upward
5/20/2015	7:12	1.04	1.48	0.44	Upward

NEW YORK AMERICAN WATER COMPANY
WILD OAKS WATER SYSTEM
LEWISBORO, NEW YORK

Manual Water-Level Measurements Collected from the Onsite Piezometers During 72-Hour Pumping Tests Conducted on Wells 4 and 5, May 18 Through May 30, 2015

Date	Time	Depth to Water – Groundwater (ft btoc)	Depth to Water – Surface Water (ft btoc)	Gradient (surface water – groundwater)	Gradient Direction
PZ-E (continued)					
5/20/2015	9:11	1.05	1.48	0.43	Upward
5/20/2015	12:39	1.05	1.47	0.42	Upward
5/20/2015	13:48	1.04	1.47	0.43	Upward
5/20/2015	15:23	1.06	1.46	0.40	Upward
5/20/2015	17:45	1.07	1.47	0.40	Upward
5/20/2015	18:19	1.08	1.49	0.41	Upward
5/20/2015	19:21	1.08	1.48	0.40	Upward
5/21/2015	7:34	1.06	1.50	0.44	Upward
5/21/2015	10:29	1.08	1.50	0.42	Upward
5/21/2015	11:57	1.09	1.50	0.41	Upward
5/21/2015	13:27	1.10	1.50	0.40	Upward
5/21/2015	15:30	1.07	1.51	0.44	Upward
5/21/2015	16:03	1.06	1.51	0.45	Upward
5/22/2015	10:27	0.99	1.51	0.52	Upward
5/22/2015	12:07	1.00	1.51	0.51	Upward
5/22/2015	13:43	1.00	1.52	0.52	Upward
5/22/2015	17:04	0.99	1.50	0.51	Upward
5/23/2015	6:05	1.00	1.52	0.52	Upward
5/23/2015	7:05	1.00	1.52	0.52	Upward
5/26/2015	9:47	0.98	1.52	0.54	Upward
5/26/2015	12:16	1.04	1.52	0.48	Upward
5/26/2015	14:17	1.06	1.52	0.46	Upward
5/26/2015	15:28	1.08	1.52	0.44	Upward
5/26/2015	18:14	1.08	1.54	0.46	Upward
5/27/2015	7:40	1.12	1.54	0.42	Upward
5/27/2015	10:12	1.15	1.53	0.38	Upward
5/27/2015	13:39	1.16	1.53	0.37	Upward
5/27/2015	14:36	1.17	1.53	0.36	Upward
5/27/2015	18:25	1.15	1.53	0.38	Upward
5/28/2015	10:49	1.18	1.53	0.35	Upward
5/28/2015	13:09	1.15	1.52	0.37	Upward
5/28/2015	14:10	1.15	1.52	0.37	Upward
5/28/2015	17:31	1.18	1.52	0.34	Upward
5/28/2015	18:39	1.19	1.52	0.33	Upward
5/29/2015	7:12	1.19	1.54	0.35	Upward
5/29/2015	9:16	1.20	1.55	0.35	Upward
5/29/2015	13:07	1.22	1.54	0.32	Upward
5/29/2015	15:35	1.21	1.53	0.32	Upward
5/29/2015	18:34	1.22	1.54	0.32	Upward
5/30/2015	7:14	1.25	1.56	0.31	Upward
5/30/2015	9:03	1.24	1.56	0.32	Upward
5/30/2015	11:03	1.23	1.56	0.33	Upward
5/30/2015	13:20	1.24	1.55	0.31	Upward

NEW YORK AMERICAN WATER COMPANY
WILD OAKS WATER SYSTEM
LEWISBORO, NEW YORK

Manual Water-Level Measurements Collected from the Onsite Piezometers During 72-Hour Pumping Tests Conducted on Wells 4 and 5, May 18 Through May 30, 2015

Date	Time	Depth to Water – Groundwater (ft btoc)	Depth to Water – Surface Water (ft btoc)	Gradient (surface water – groundwater)	Gradient Direction
PZ-E (continued)					
5/31/2015	10:36	1.24	1.55	0.31	Upward
5/31/2015	12:13	1.23	1.55	0.32	Upward
6/1/2015	14:48	0.99	1.45	0.46	Upward
6/2/2015	14:06	0.93	1.40	0.47	Upward
6/4/2015	11:45	0.99	1.49	0.50	Upward
6/4/2015	14:15	1.02	1.49	0.47	Upward
6/11/2015	11:30	1.03	1.53	0.50	Upward
PZ-F					
5/14/2015	13:44	2.81	2.67	-0.14	Downward
5/14/2015	14:56	2.81	2.67	-0.14	Downward
5/15/2015	15:00	2.84	2.70	-0.14	Downward
5/15/2015	16:46	2.85	2.70	-0.15	Downward
5/16/2015	18:47	2.58	2.31	-0.27	Downward
5/18/2015	10:40	2.45	2.25	-0.20	Downward
5/18/2015	13:46	2.49	2.27	-0.22	Downward
5/18/2015	15:27	2.50	2.29	-0.21	Downward
5/19/2015	7:44	2.56	2.43	-0.13	Downward
5/19/2015	10:36	2.60	2.43	-0.17	Downward
5/19/2015	13:17	2.60	2.43	-0.17	Downward
5/19/2015	14:32	2.62	2.43	-0.19	Downward
5/19/2015	16:24	2.62	2.43	-0.19	Downward
5/19/2015	18:53	2.63	2.44	-0.19	Downward
5/20/2015	8:37	2.54	2.40	-0.14	Downward
5/20/2015	9:28	2.54	2.36	-0.18	Downward
5/20/2015	11:23	2.55	2.36	-0.19	Downward
5/20/2015	13:47	2.59	2.35	-0.24	Downward
5/20/2015	15:30	2.54	2.35	-0.19	Downward
5/20/2015	17:52	2.54	2.35	-0.19	Downward
5/20/2015	18:26	2.54	2.35	-0.19	Downward
5/20/2015	19:28	2.54	2.35	-0.19	Downward
5/21/2015	8:20	2.56	2.40	-0.16	Downward
5/21/2015	10:37	2.60	2.40	-0.20	Downward
5/21/2015	12:09	2.60	2.41	-0.19	Downward
5/21/2015	13:36	2.61	2.42	-0.19	Downward
5/21/2015	14:54	2.61	2.43	-0.18	Downward
5/21/2015	15:57	2.61	2.44	-0.17	Downward
5/22/2015	10:36	2.67	2.50	-0.17	Downward
5/22/2015	11:31	2.67	2.50	-0.17	Downward
5/22/2015	14:05	2.68	2.51	-0.17	Downward
5/22/2015	16:38	2.69	2.53	-0.16	Downward
5/23/2015	6:16	2.74	2.56	-0.18	Downward
5/23/2015	7:13	2.72	2.56	-0.16	Downward
5/26/2015	8:40	2.85	2.71	-0.14	Downward

NEW YORK AMERICAN WATER COMPANY
WILD OAKS WATER SYSTEM
LEWISBORO, NEW YORK

Manual Water-Level Measurements Collected from the Onsite Piezometers During 72-Hour Pumping Tests Conducted on Wells 4 and 5, May 18 Through May 30, 2015

Date	Time	Depth to Water – Groundwater (ft btoc)	Depth to Water – Surface Water (ft btoc)	Gradient (surface water – groundwater)	Gradient Direction
PZ-F (continued)					
5/26/2015	9:26	2.83	2.71	-0.12	Downward
5/26/2015	12:33	2.86	2.69	-0.17	Downward
5/26/2015	14:30	2.86	2.70	-0.16	Downward
5/26/2015	15:44	2.86	2.70	-0.16	Downward
5/26/2015	17:23	2.88	2.71	-0.17	Downward
5/27/2015	9:13	2.88	2.72	-0.16	Downward
5/27/2015	10:32	2.89	2.75	-0.14	Downward
5/27/2015	12:22	2.90	2.73	-0.17	Downward
5/27/2015	13:45	2.89	2.73	-0.16	Downward
5/27/2015	14:49	2.89	2.73	-0.16	Downward
5/27/2015	15:49	2.90	2.73	-0.17	Downward
5/27/2015	18:32	2.89	2.74	-0.15	Downward
5/28/2015	10:14	2.76	2.65	-0.11	Downward
5/28/2015	12:48	2.79	2.64	-0.15	Downward
5/28/2015	14:31	2.79	2.64	-0.15	Downward
5/28/2015	16:28	2.79	2.64	-0.15	Downward
5/28/2015	17:38	2.78	2.63	-0.15	Downward
5/28/2015	18:46	2.76	2.60	-0.16	Downward
5/29/2015	7:58	2.59	2.45	-0.14	Downward
5/29/2015	9:34	2.59	2.41	-0.18	Downward
5/29/2015	10:38	2.60	2.41	-0.19	Downward
5/29/2015	11:50	2.60	2.41	-0.19	Downward
5/29/2015	13:30	2.60	2.41	-0.19	Downward
5/29/2015	14:50	2.60	2.41	-0.19	Downward
5/29/2015	15:29	2.60	2.41	-0.19	Downward
5/29/2015	18:27	2.62	2.43	-0.19	Downward
5/30/2015	7:43	2.69	2.55	-0.14	Downward
5/30/2015	9:34	2.70	2.56	-0.14	Downward
5/30/2015	11:22	2.71	2.56	-0.15	Downward
5/30/2015	13:11	2.71	2.58	-0.13	Downward
5/31/2015	10:44	2.84	2.67	-0.17	Downward
5/31/2015	12:27	2.83	2.68	-0.15	Downward
6/1/2015	15:03	1.84	1.76	-0.08	Downward
6/4/2015	12:06	2.42	2.15	-0.27	Downward
6/4/2015	14:30	2.42	2.17	-0.25	Downward
6/11/2015	11:39	2.54	2.35	-0.19	Downward

ft btoc feet below top of casing

PIEZOMETERS

JUNE 2016

NEW YORK AMERICAN WATER COMPANY
WILD OAKS WATER SYSTEM
LEWISBORO, NEW YORK

Hydrograph of Water-Level Measurements Collected from PZ-A During 72-Hour Pumping Test Conducted on Well 6 from June 14 Through 17, 2016

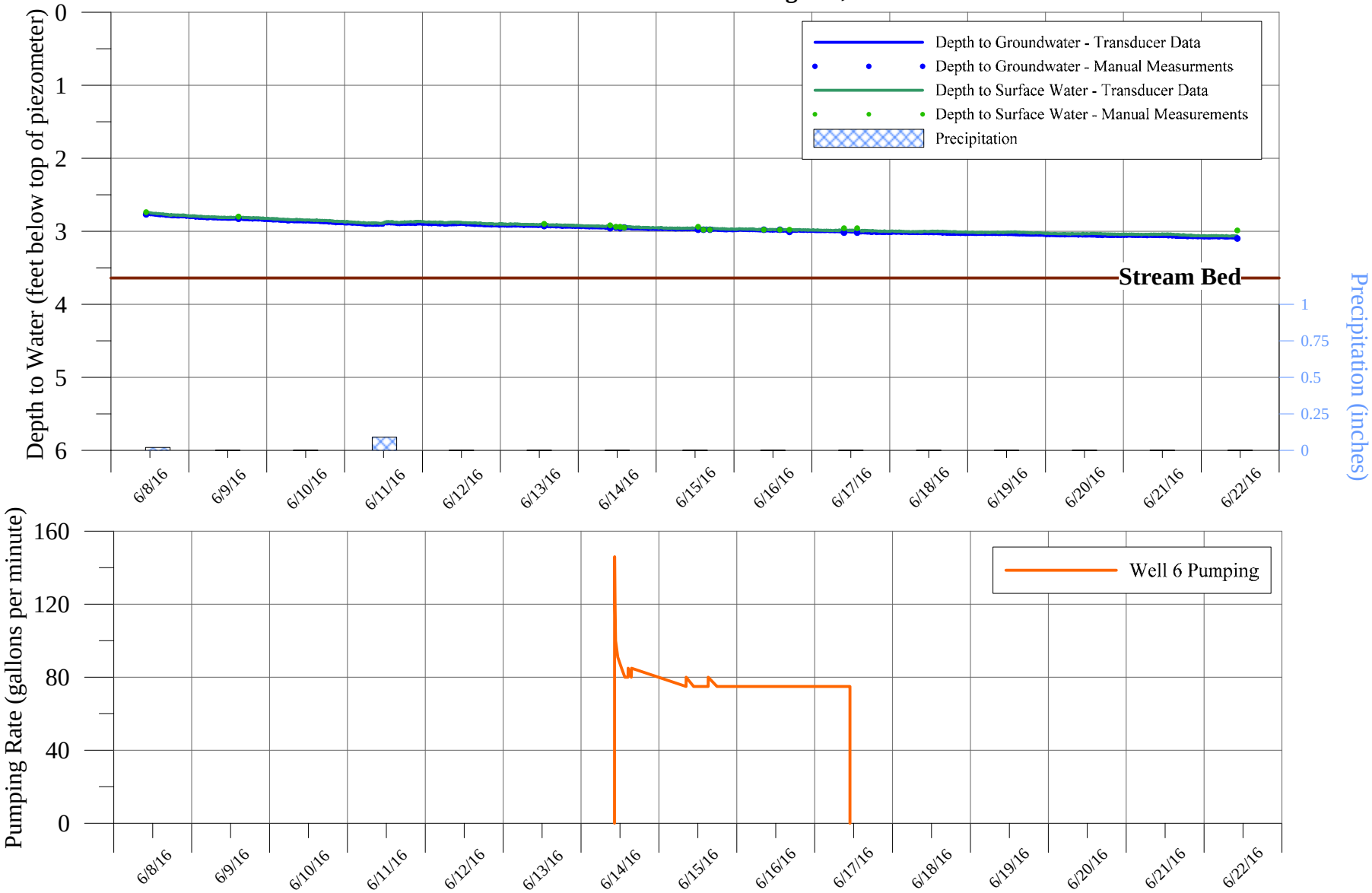

K:\Jobs\American Water Co\Wild Oaks\72-Hour Pumping Test (June 2016)\Hydrographs\Piezometers\PZ-A.grf

LEGGETTE, BRASHEARS & GRAHAM, INC.

NEW YORK AMERICAN WATER COMPANY
WILD OAKS WATER SYSTEM
LEWISBORO, NEW YORK

Hydrograph of Water-Level Measurements Collected from PZ-B During 72-Hour Pumping Test Conducted on Well 6 from June 14 Through 17, 2016

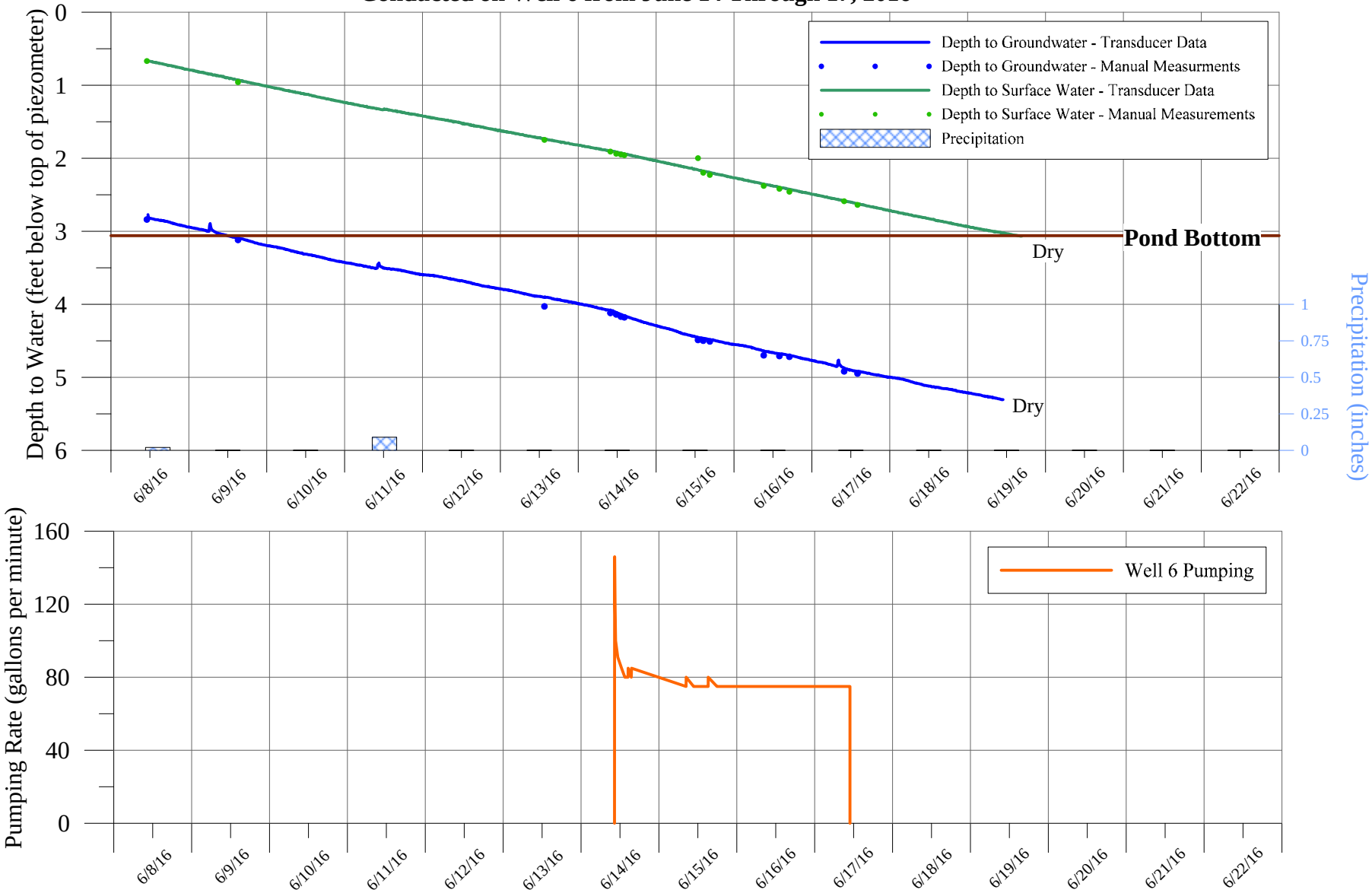

K:\Jobs\American Water Co\Wild Oaks\72-Hour Pumping Test (June 2016)\Hydrographs\Piezometers\PZ-B.grf

LEGGETTE, BRASHEARS & GRAHAM, INC.

NEW YORK AMERICAN WATER COMPANY
WILD OAKS WATER SYSTEM
LEWISBORO, NEW YORK

Hydrograph of Water-Level Measurements Collected from PZ-C During 72-Hour Pumping Test Conducted on Well 6 from June 14 Through 17, 2016

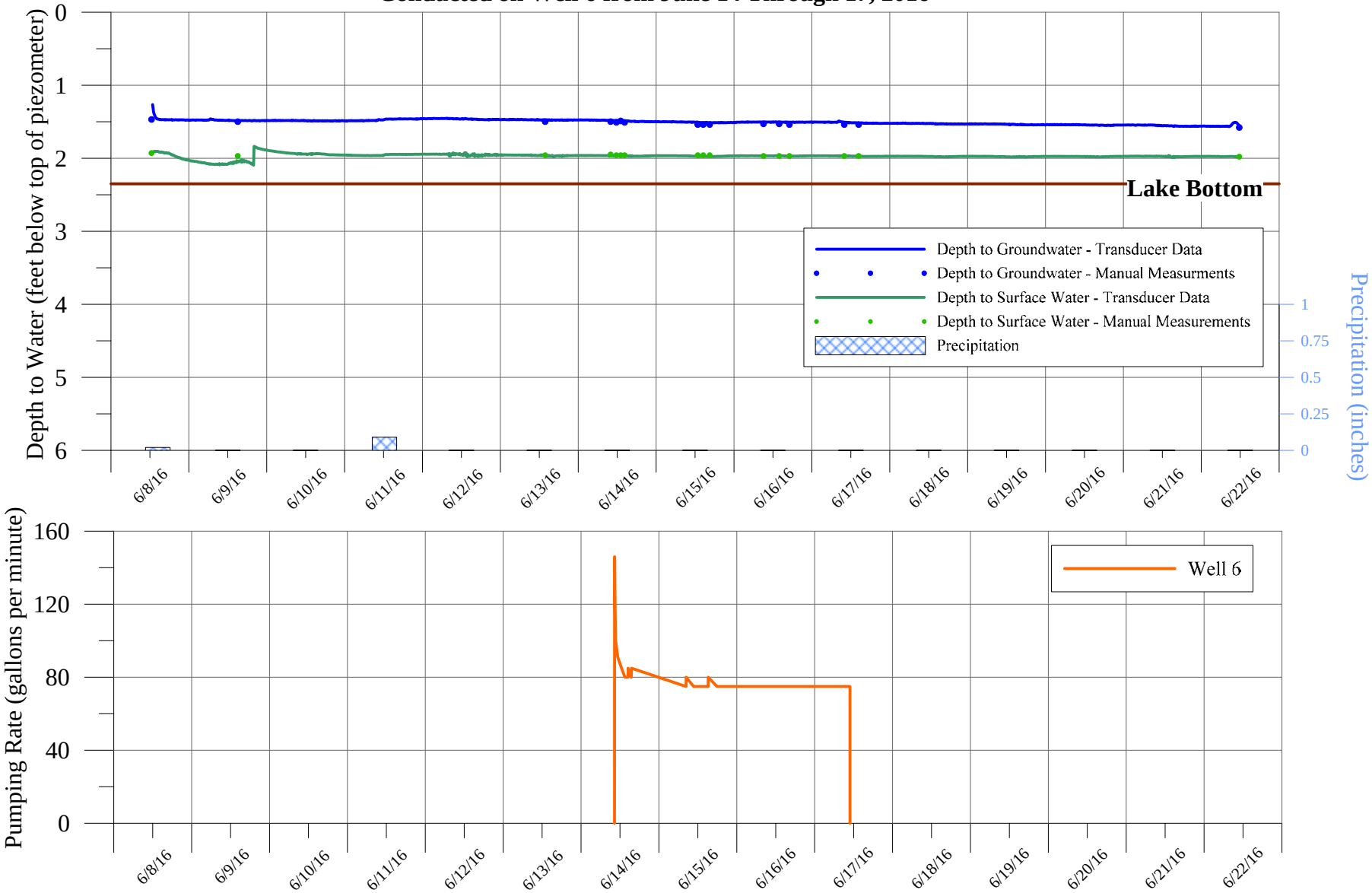

K:\Jobs\American Water Co\Wild Oaks\72-Hour Pumping Test (June 2016)\Hydrographs\Piezometers\PZ-C.grf

LEGGETTE, BRASHEARS & GRAHAM, INC.

NEW YORK AMERICAN WATER COMPANY
WILD OAKS WATER SYSTEM
LEWISBORO, NEW YORK

Hydrograph of Water-Level Measurements Collected from PZ-D During 72-Hour Pumping Test Conducted on Well 6 from June 14 Through 17, 2016

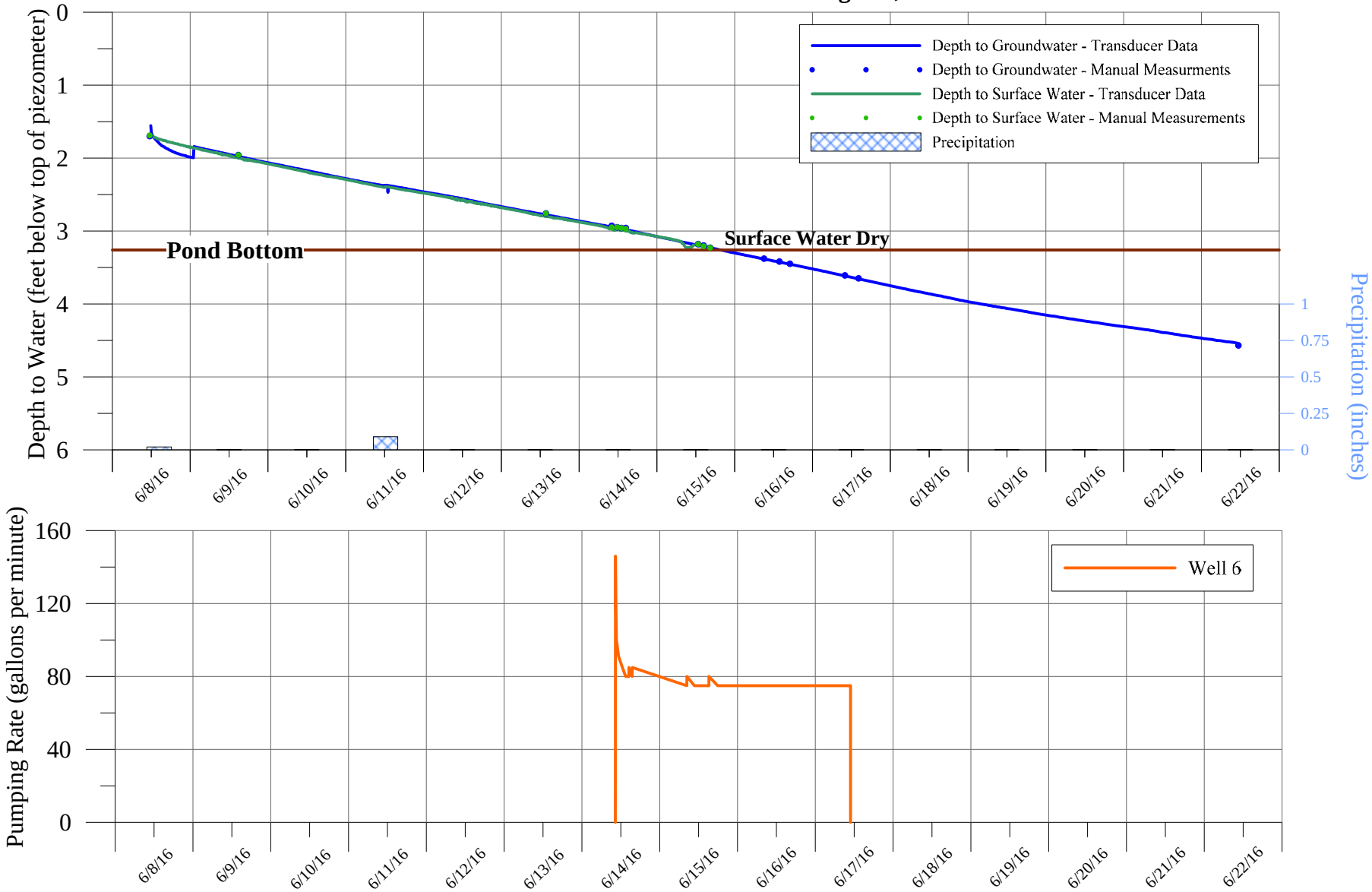

K:\Jobs\American Water Co\Wild Oaks\72-Hour Pumping Test (June 2016)\Hydrographs\Piezometers\PZ-D.grf

LEGGETTE, BRASHEARS & GRAHAM, INC.

NEW YORK AMERICAN WATER COMPANY
WILD OAKS WATER SYSTEM
LEWISBORO, NEW YORK

Hydrograph of Water-Level Measurements Collected from PZ-E During 72-Hour Pumping Test Conducted on Well 6 from June 14 Through 17, 2016

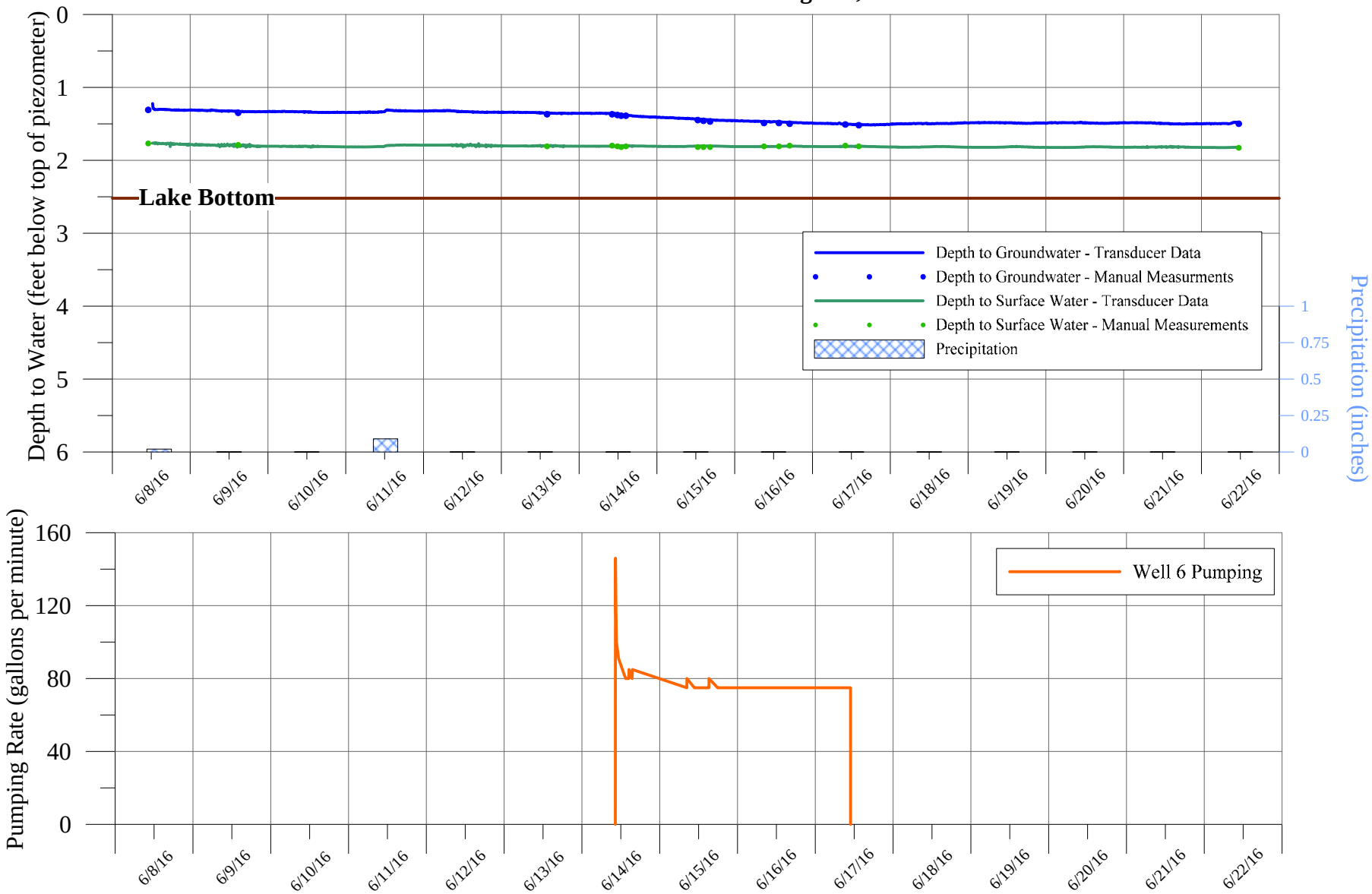

K:\Jobs\American Water Co\Wild Oaks\72-Hour Pumping Test (June 2016)\Hydrographs\Piezometers\PZ-E.grf

LEGGETTE, BRASHEARS & GRAHAM, INC.

NEW YORK AMERICAN WATER COMPANY
WILD OAKS WATER SYSTEM
LEWISBORO, NEW YORK

Hydrograph of Water-Level Measurements Collected from PZ-F During 72-Hour Pumping Test Conducted on Well 6 from June 14 Through 17, 2016

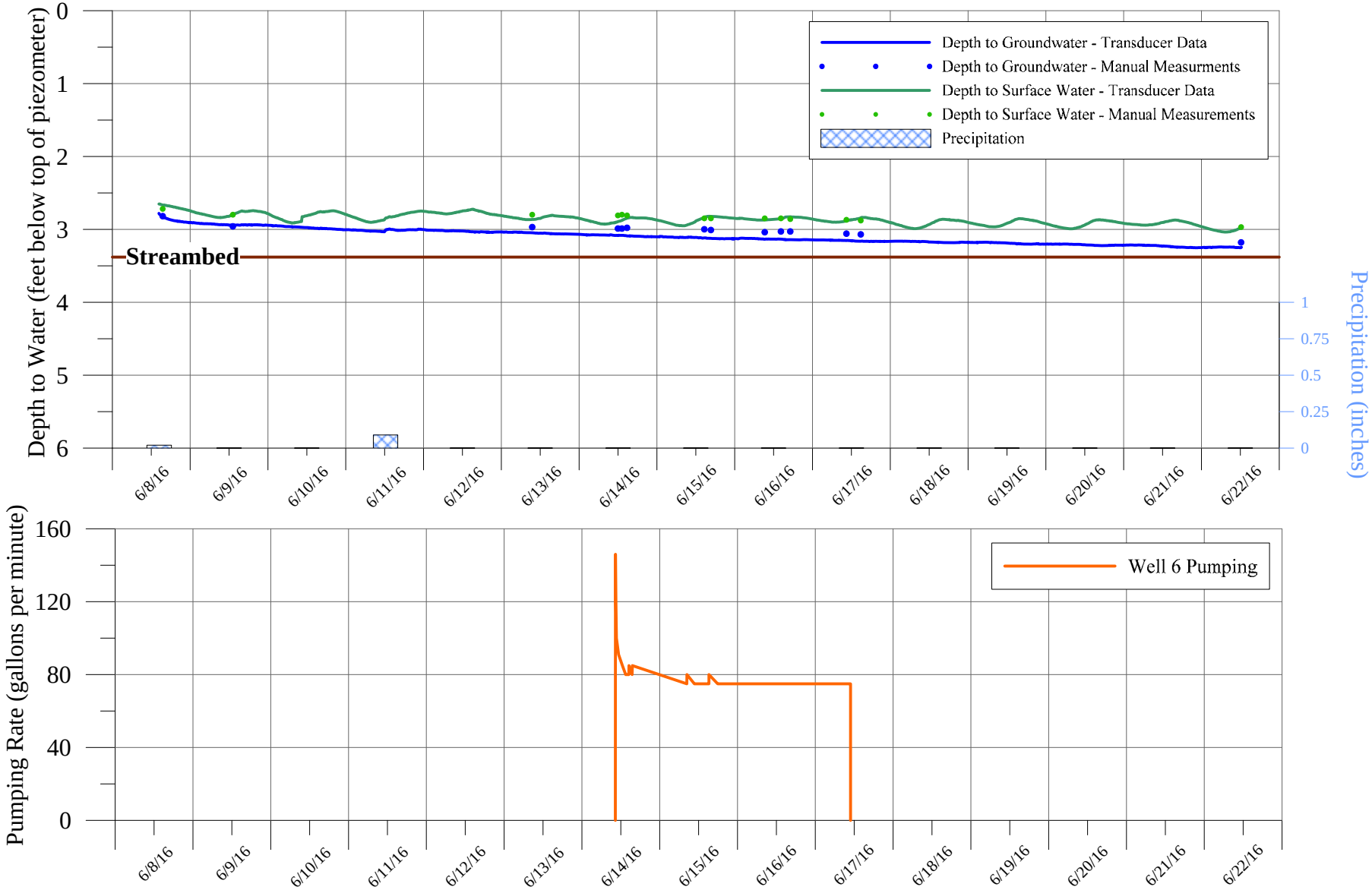

K:\Jobs\American Water Co\Wild Oaks\72-Hour Pumping Test (June 2016)\Hydrographs\Piezometers\PZ-F.grf

LEGGETTE, BRASHEARS & GRAHAM, INC.

NEW YORK AMERICAN WATER COMPANY
WILD OAKS WATER SYSTEM
LEWISBORO, NEW YORK

Manual Water-Level Measurements Collected from Piezometers During 72-Hour Pumping Test
Conducted on Well 6 June 14 Through June 17, 2016

Date	Time	Depth to Groundwater (ft btoc)	Depth to Surface Water (ft btoc)	Gradient Value	Gradient Direction
PZ-A					
6/8/2016	10:50	2.77	2.74	-0.03	Downward
6/9/2016	15:21	2.83	2.80	-0.03	Downward
6/13/2016	13:32	2.93	2.90	-0.03	Downward
6/14/2016	9:51	2.96	2.92	-0.04	Downward
6/14/2016	11:40	2.95	2.94	-0.01	Downward
6/14/2016	12:54	2.96	2.94	-0.02	Downward
6/14/2016	14:11	2.95	2.95	0.00	Neutral
6/15/2016	12:56	2.98	2.94	-0.04	Downward
6/15/2016	14:37	2.98	2.98	0.00	Neutral
6/15/2016	16:35	2.98	2.98	0.00	Neutral
6/16/2016	9:11	2.98	2.98	0.00	Neutral
6/16/2016	14:10	2.98	2.98	0.00	Neutral
6/16/2016	17:06	3.01	2.98	-0.03	Downward
6/17/2016	9:55	3.02	2.96	-0.06	Downward
6/17/2016	13:58	3.02	2.96	-0.06	Downward
6/22/2016	11:07	3.10	2.99	-0.11	Downward
PZ-B					
6/8/2016	11:05	2.84	0.67	-2.17	Downward
6/9/2016	15:09	3.12	0.96	-2.16	Downward
6/13/2016	13:36	4.03	1.75	-2.28	Downward
6/14/2016	9:55	4.12	1.91	-2.21	Downward
6/14/2016	11:41	4.14	1.94	-2.20	Downward
6/14/2016	13:08	4.17	1.95	-2.22	Downward
6/14/2016	14:13	4.18	1.96	-2.22	Downward
6/15/2016	12:54	4.49	2.00	-2.49	Downward
6/15/2016	14:32	4.50	2.20	-2.30	Downward
6/15/2016	16:33	4.51	2.23	-2.28	Downward
6/16/2016	9:10	4.70	2.38	-2.32	Downward
6/16/2016	14:01	4.71	2.42	-2.29	Downward
6/16/2016	17:05	4.72	2.46	-2.26	Downward
6/17/2016	9:57	4.92	2.59	-2.33	Downward
6/17/2016	14:05	4.95	2.64	-2.31	Downward
6/22/2016	11:13	Dry	Dry	--	--
PZ-C					
6/8/2016	12:30	1.47	1.93	0.46	Upward
6/9/2016	15:05	1.50	1.97	0.47	Upward
6/13/2016	13:49	1.50	1.96	0.46	Upward
6/14/2016	10:00	1.50	1.95	0.45	Upward
6/14/2016	11:44	1.51	1.96	0.45	Upward
6/14/2016	13:06	1.49	1.96	0.47	Upward
6/14/2016	14:18	1.51	1.96	0.45	Upward
6/15/2016	12:50	1.54	1.96	0.42	Upward

NEW YORK AMERICAN WATER COMPANY
WILD OAKS WATER SYSTEM
LEWISBORO, NEW YORK

Manual Water-Level Measurements Collected from Piezometers During 72-Hour Pumping Test
Conducted on Well 6 June 14 Through June 17, 2016

Date	Time	Depth to Groundwater (ft btoc)	Depth to Surface Water (ft btoc)	Gradient Value	Gradient Direction
PZ-C (continued)					
6/15/2016	14:30	1.54	1.96	0.42	Upward
6/15/2016	16:30	1.54	1.96	0.42	Upward
6/16/2016	9:07	1.53	1.97	0.44	Upward
6/16/2016	13:54	1.53	1.97	0.44	Upward
6/16/2016	17:03	1.54	1.97	0.43	Upward
6/17/2016	10:00	1.54	1.97	0.43	Upward
6/17/2016	14:24	1.54	1.97	0.43	Upward
6/22/2016	11:43	1.58	1.98	0.40	Upward
PZ-D					
6/8/2016	11:32	1.70	1.69	-0.01	Downward
6/9/2016	14:54	1.96	1.96	0.00	Neutral
6/13/2016	13:48	2.76	2.76	0.00	Neutral
6/14/2016	10:06	2.93	2.95	0.02	Upward
6/14/2016	11:46	2.95	2.95	0.00	Neutral
6/14/2016	13:02	2.96	2.96	0.00	Neutral
6/14/2016	14:23	2.96	2.97	0.01	Upward
6/15/2016	12:43	3.18	3.18	0.00	Neutral
6/15/2016	14:27	3.20	3.21	0.01	Upward
6/15/2016	16:27	3.23	3.23	0.00	Neutral
6/16/2016	9:04	3.38	Dry	--	--
6/16/2016	13:49	3.42	Dry	--	--
6/16/2016	17:01	3.45	Dry	--	--
6/17/2016	10:03	3.61	Dry	--	--
6/17/2016	14:13	3.65	Dry	--	--
6/22/2016	11:25	4.57	Dry	--	--
PZ-E					
6/8/2016	11:05	1.31	1.77	0.46	Upward
6/9/2016	14:49	1.35	1.79	0.44	Upward
6/13/2016	14:05	1.37	1.81	0.44	Upward
6/14/2016	10:10	1.37	1.80	0.43	Upward
6/14/2016	11:51	1.38	1.81	0.43	Upward
6/14/2016	12:59	1.39	1.82	0.43	Upward
6/14/2016	14:26	1.39	1.81	0.36	Upward
6/15/2016	12:39	1.45	1.82	0.36	Upward
6/15/2016	14:23	1.46	1.82	0.35	Upward
6/15/2016	16:24	1.47	1.82	0.33	Upward
6/16/2016	9:04	1.49	1.81	0.32	Upward
6/16/2016	13:39	1.49	1.81	0.31	Upward
6/16/2016	16:59	1.50	1.80	0.29	Upward
6/17/2016	10:08	1.51	1.80	0.28	Upward
6/17/2016	14:18	1.52	1.81	0.31	Upward
6/22/2016	11:33	1.50	1.83	0.33	Upward

NEW YORK AMERICAN WATER COMPANY
WILD OAKS WATER SYSTEM
LEWISBORO, NEW YORK

Manual Water-Level Measurements Collected from Piezometers During 72-Hour Pumping Test
Conducted on Well 6 June 14 Through June 17, 2016

Date	Time	Depth to Groundwater (ft btoc)	Depth to Surface Water (ft btoc)	Gradient Value	Gradient Direction
PZ-F					
6/8/2016	15:32	2.82	2.72	-0.10	Downward
6/9/2016	13:09	2.96	2.80	-0.16	Downward
6/13/2016	9:34	2.97	2.80	-0.17	Downward
6/14/2016	11:58	2.99	2.81	-0.18	Downward
6/14/2016	13:14	2.99	2.80	-0.19	Downward
6/14/2016	14:47	2.98	2.81	-0.17	Downward
6/15/2016	14:40	3.00	2.85	-0.15	Downward
6/15/2016	16:41	3.01	2.85	-0.16	Downward
6/16/2016	9:16	3.04	2.85	-0.19	Downward
6/16/2016	14:16	3.03	2.85	-0.18	Downward
6/16/2016	17:10	3.03	2.86	-0.17	Downward
6/17/2016	10:28	3.06	2.87	-0.19	Downward
6/17/2016	14:53	3.07	2.88	-0.19	Downward
6/22/2016	12:15	3.18	2.97	-0.21	Downward

ft btoc feet below top of casing

APPENDIX VII

OFFSITE MONITORING WELLS

OFFSITE WELLS

MAY 2015

NEW YORK AMERICAN WATER COMPANY
WILD OAKS WATER SYSTEM
LEWISBORO, NEW YORK

Hydrograph of Water-Level Measurements Collected from Well at 73 Nash Road During 72-Hour Pumping Test Program Conducted on Well 4 and Well 5 from May 18 Through May 30, 2015

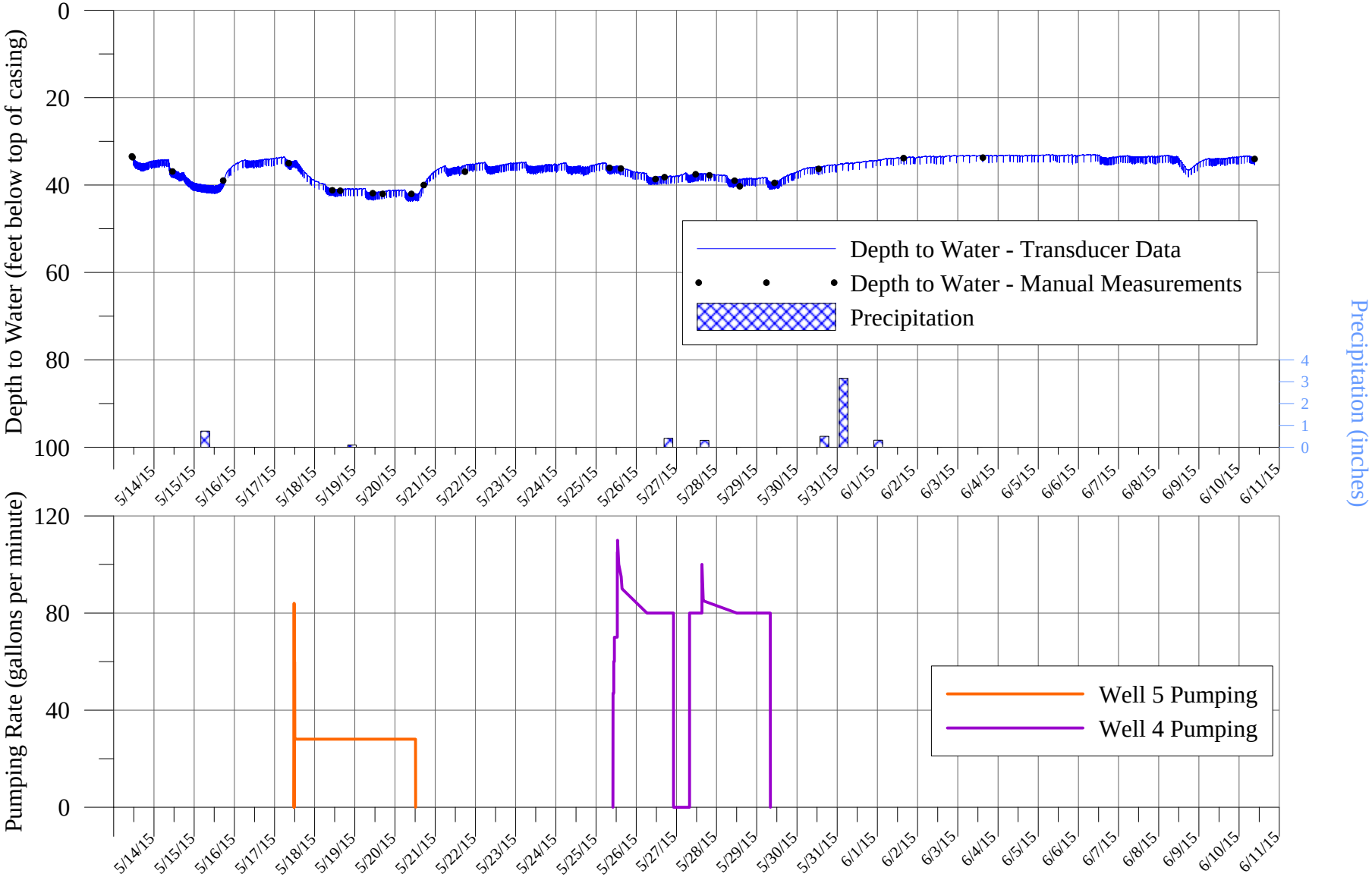

K:\Jobs\American Water Co\Wild Oak\72-Hour Pumping Test (May 2015)\Hydrographs\offsite wells\73 Nash Rd.grf

LEGGETTE, BRASHEARS & GRAHAM, INC.

NEW YORK AMERICAN WATER COMPANY
WILD OAKS WATER SYSTEM
LEWISBORO, NEW YORK

Hydrograph of Water-Level Measurements Collected from Well at 79 Nash Road During 72-Hour Pumping Test Program Conducted on Well 4 and Well 5 from May 18 Through May 30, 2015

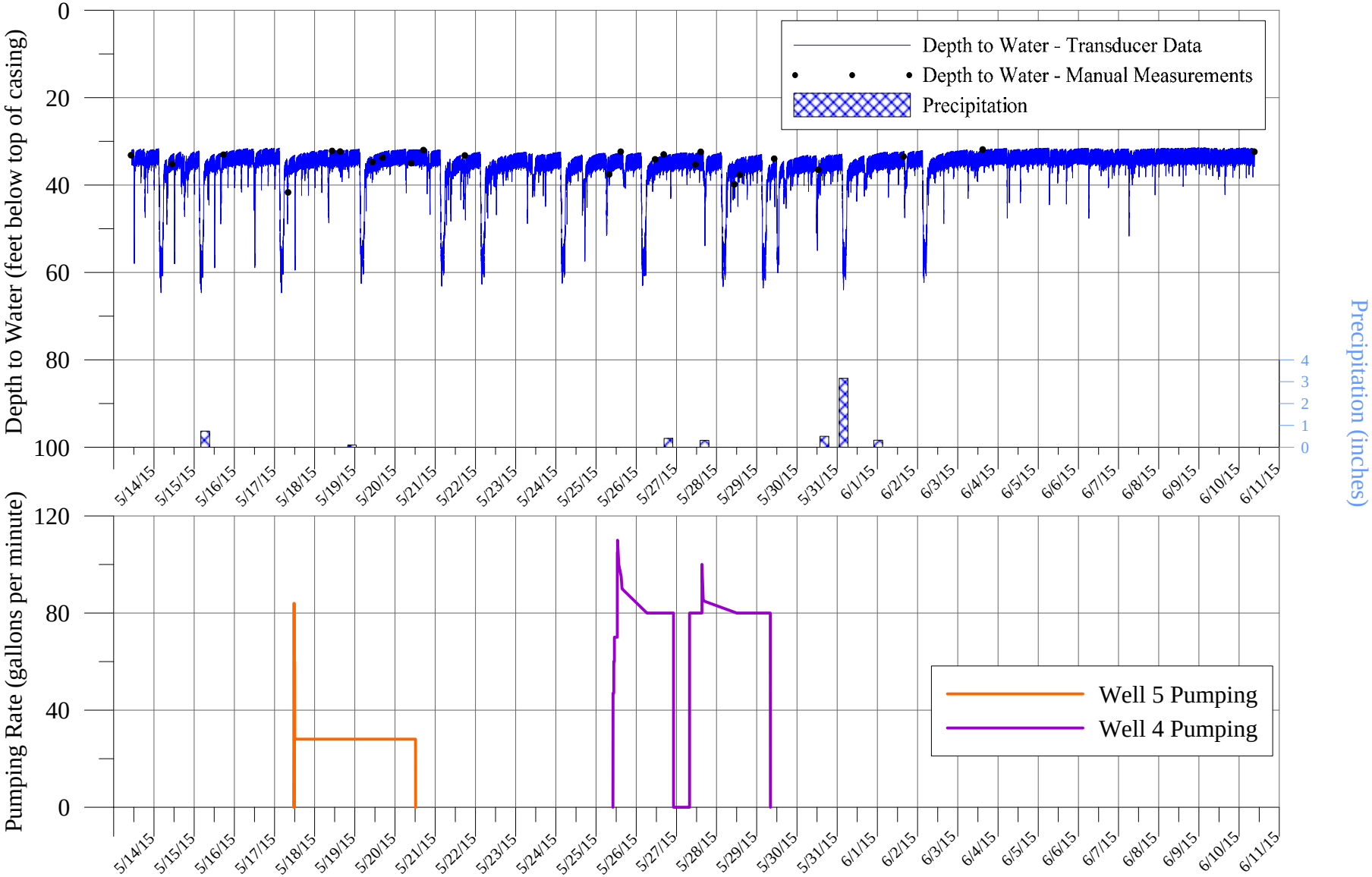

K:\Jobs\American Water Co\Wild Oak\72-Hour Pumping Test (May 2015)\Hydrographs\offsite wells\79 Nash Rd.grf

LEGGETTE, BRASHEARS & GRAHAM, INC.

NEW YORK AMERICAN WATER COMPANY
WILD OAKS WATER SYSTEM
LEWISBORO, NEW YORK

Hydrograph of Water-Level Measurements Collected from Well at 195 Waccabuc Road During 72-Hour Pumping Test Program Conducted on Well 4 and Well 5 from May 18 Through May 30, 2015

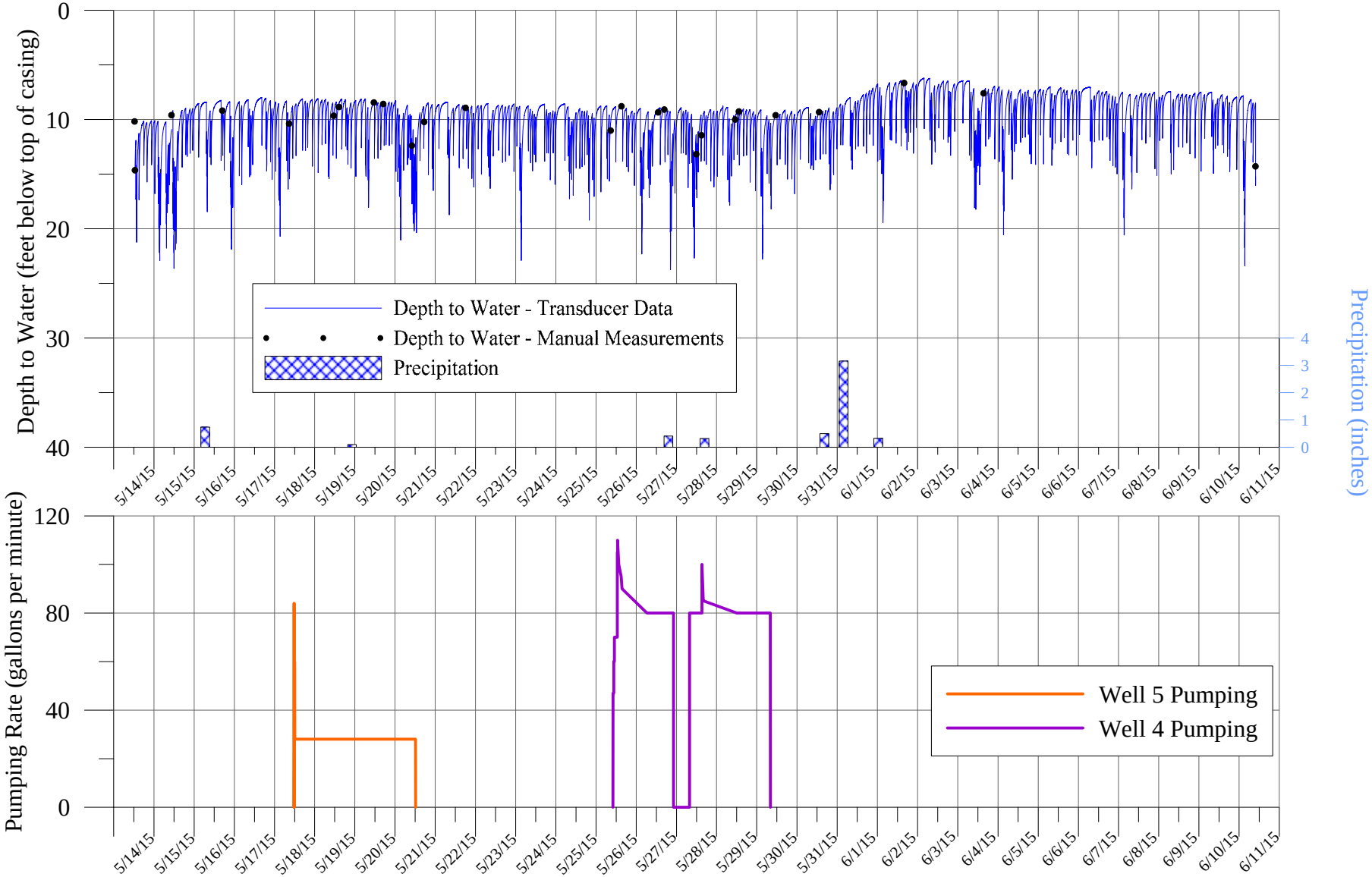

K:\Jobs\American Water Co\Wild Oak\72-Hour Pumping Test (May 2015)\Hydrographs\offsite wells\195 Waccabuc.grf

LEGGETTE, BRASHEARS & GRAHAM, INC.

NEW YORK AMERICAN WATER COMPANY
WILD OAKS WATER SYSTEM
LEWISBORO, NEW YORK

Hydrograph of Water-Level Measurements Collected from Well 3 During 72-Hour Pumping Test Program Conducted on Well 4 and Well 5 from May 18 Through May 30, 2015

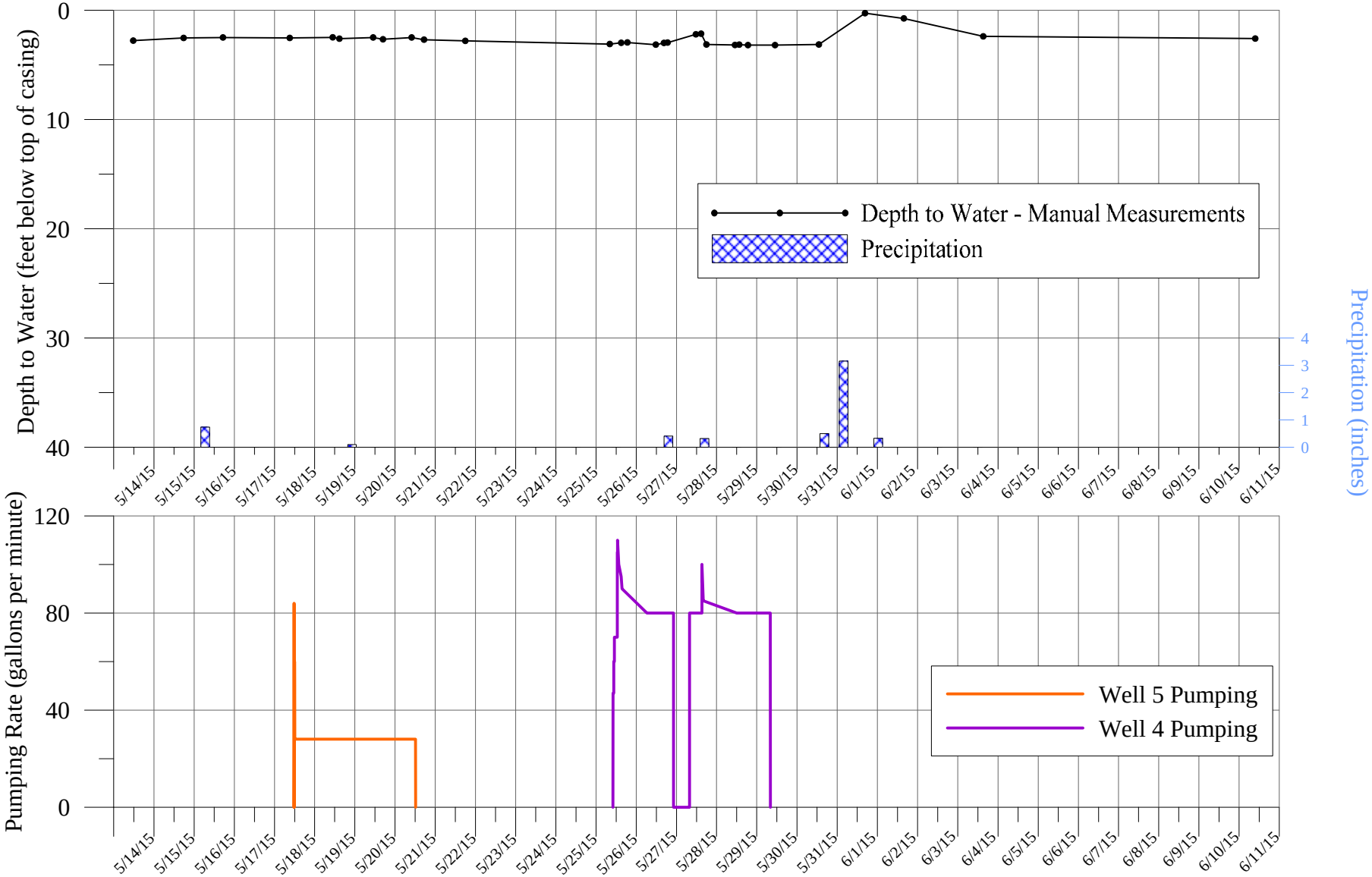

K:\Jobs\American Water Co\Wild Oak\72-Hour Pumping Test (May 2015)\Hydrographs\offsite wells\Well 3.grf

LEGGETTE, BRASHEARS & GRAHAM, INC.

NEW YORK AMERICAN WATER COMPANY
WILD OAKS WATER SYSTEM
LEWISBORO, NEW YORK

Summary of Manual Water-Level Measurements Collected from Offsite Monitoring Wells During 72-Hour Pumping Tests Conducted on Wells 4 and 5, May 18 Through May 30, 2015

Date	Time	Depth to Water (ft btoc)	Date	Time	Depth to Water (ft btoc)
73 Nash Road			**79 Nash Road**		
5/14/2015	10:54	33.44	5/14/2015	10:22	33.16
5/14/2015	11:15	33.65	5/15/2015	10:53	35.19
5/15/2015	11:04	36.91	5/16/2015	17:33	33.08
5/16/2015	17:24	38.96	5/18/2015	8:10	41.68
5/18/2015	8:34	35.00	5/19/2015	10:25	32.20
5/19/2015	10:33	41.21	5/19/2015	15:11	32.34
5/19/2015	15:19	41.30	5/20/2015	10:34	34.74
5/20/2015	10:43	41.87	5/20/2015	16:36	33.75
5/20/2015	16:43	42.02	5/21/2015	9:41	35.00
5/21/2015	9:45	42.02	5/21/2015	16:59	32.00
5/21/2015	17:07	40.00	5/22/2015	17:41	33.23
5/22/2015	17:48	36.94	5/26/2015	7:54	37.58
5/26/2015	8:02	36.08	5/26/2015	14:48	32.37
5/26/2015	14:53	36.25	5/27/2015	11:19	34.11
5/27/2015	11:29	38.64	5/27/2015	16:27	32.99
5/27/2015	16:57	38.19	5/28/2015	11:24	35.28
5/28/2015	11:31	37.55	5/28/2015	14:32	32.40
5/28/2015	19:47	37.78	5/29/2015	10:37	39.85
5/29/2015	10:46	39.00	5/29/2015	13:49	37.68
5/29/2015	13:52	40.28	5/30/2015	10:22	33.98
5/30/2015	10:37	39.50	5/31/2015	12:47	36.50
5/31/2015	12:54	36.29	6/2/2015	15:38	33.46
6/2/2015	15:44	33.83	6/4/2015	14:51	31.87
6/4/2015	15:02	33.74	6/11/2015	9:06	32.39
6/11/2015	9:20	34.04	--	--	--
195 Waccabuc Road			**Well 3**		
5/14/2015	12:28	10.18	5/14/2015	11:41	2.77
5/14/2015	12:40	14.64	5/15/2015	17:46	2.54
5/15/2015	10:34	9.60	5/16/2015	17:15	2.50
5/16/2015	16:54	9.19	5/18/2015	9:04	2.53
5/18/2015	8:47	10.38	5/19/2015	10:44	2.48
5/19/2015	11:23	9.65	5/19/2015	14:45	2.60
5/19/2015	14:31	8.85	5/20/2015	10:58	2.50
5/20/2015	11:23	8.44	5/20/2015	16:49	2.65
5/20/2015	16:58	8.58	5/21/2015	9:54	2.50
5/21/2015	10:03	12.39	5/21/2015	17:16	2.70
5/21/2015	17:25	10.23	5/22/2015	17:55	2.80
5/22/2015	18:08	8.94	5/26/2015	8:16	3.10
5/26/2015	8:46	11.02	5/26/2015	15:00	2.98
5/26/2015	15:10	8.79	5/26/2015	18:48	2.95

NEW YORK AMERICAN WATER COMPANY
WILD OAKS WATER SYSTEM
LEWISBORO, NEW YORK

Summary of Manual Water-Level Measurements Collected from Offsite Monitoring Wells During 72-Hour Pumping Tests Conducted on Wells 4 and 5, May 18 Through May 30, 2015

Date	Time	Depth to Water (ft btoc)	Date	Time	Depth to Water (ft btoc)
195 Waccabuc Road (continued)			**Well 3 (continued)**		
5/27/2015	13:06	9.35	5/27/2015	11:43	3.15
5/27/2015	16:46	9.09	5/27/2015	16:35	2.99
5/28/2015	11:51	13.17	5/27/2015	18:45	2.96
5/28/2015	14:58	11.44	5/28/2015	11:40	2.20
5/29/2015	11:06	10.00	5/28/2015	14:46	2.15
5/29/2015	13:17	9.27	5/28/2015	17:54	3.13
5/30/2015	11:14	9.62	5/29/2015	10:59	3.17
5/31/2015	13:13	9.32	5/29/2015	13:28	3.15
6/2/2015	16:00	6.66	5/29/2015	18:45	3.19
6/4/2015	15:28	7.60	5/30/2015	10:55	3.19
6/11/2015	9:50	14.30	5/31/2015	13:05	3.14
--	--	--	6/1/2015	16:40	0.27
--	--	--	6/2/2015	15:50	0.75
--	--	--	6/4/2015	15:15	2.39
--	--	--	6/11/2015	9:37	2.59

ft btoc feet below top of casing

OFFSITE WELLS

JUNE 2016

NEW YORK AMERICAN WATER COMPANY
WILD OAKS WATER SYSTEM
LEWISBORO, NEW YORK

Hydrograph of Water-Level Measurements Collected from Bedrock Well 3 During 72-Hour Pumping Test Conducted on Well 6 from June 14 Through 17, 2016

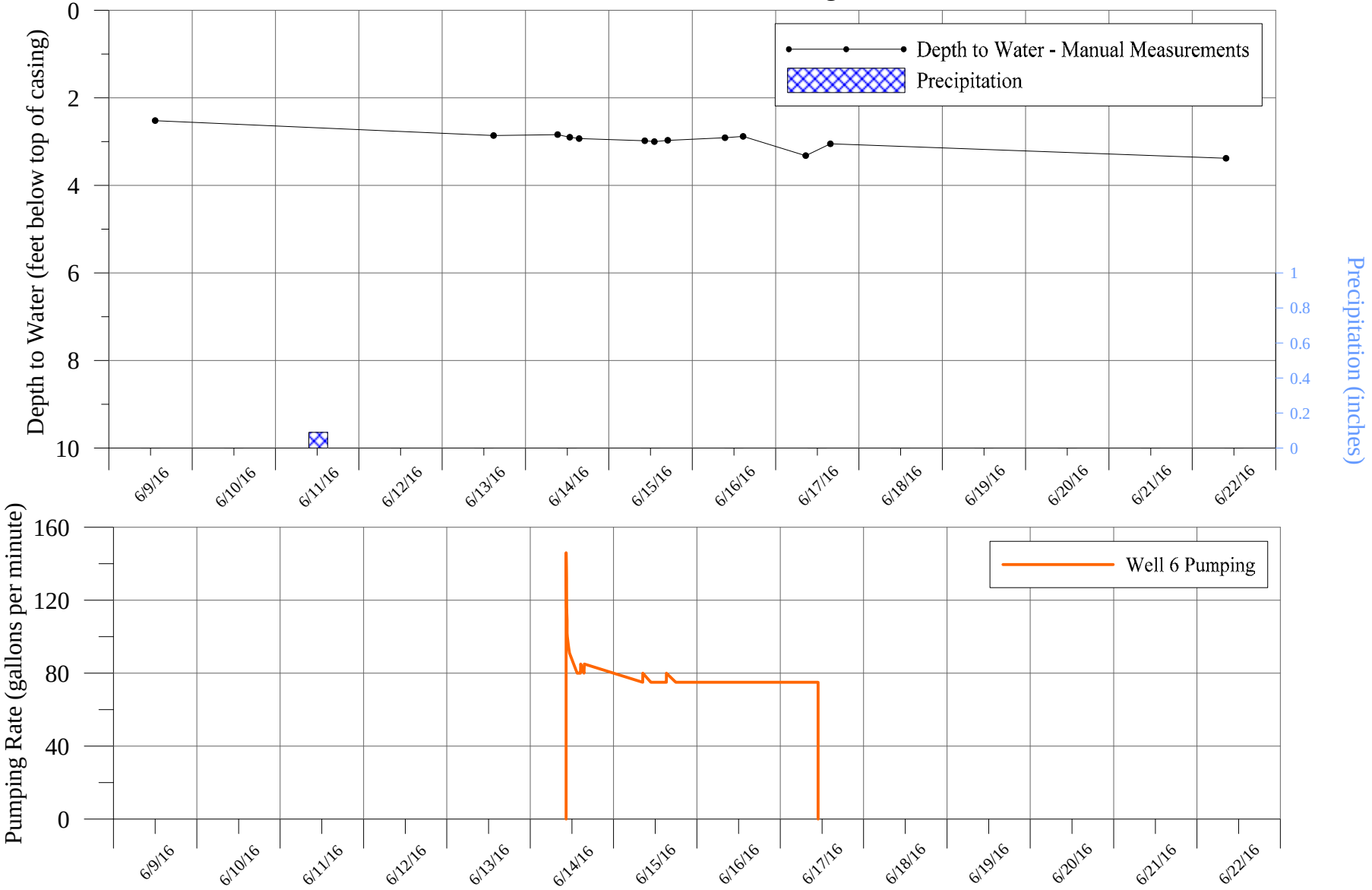

K:\Jobs\American Water Co\Wild Oaks\72-Hour Pumping Test (June 2016)\Hydrographs\Monitoring Wells\Well 3.grf

LEGGETTE, BRASHEARS & GRAHAM, INC.

NEW YORK AMERICAN WATER COMPANY
WILD OAKS WATER SYSTEM
LEWISBORO, NEW YORK

Hydrograph of Water-Level Measurements Collected from Well at 73 Nash Road During 72-Hour Pumping Test Conducted on Well 6 from June 14 Through 17, 2016

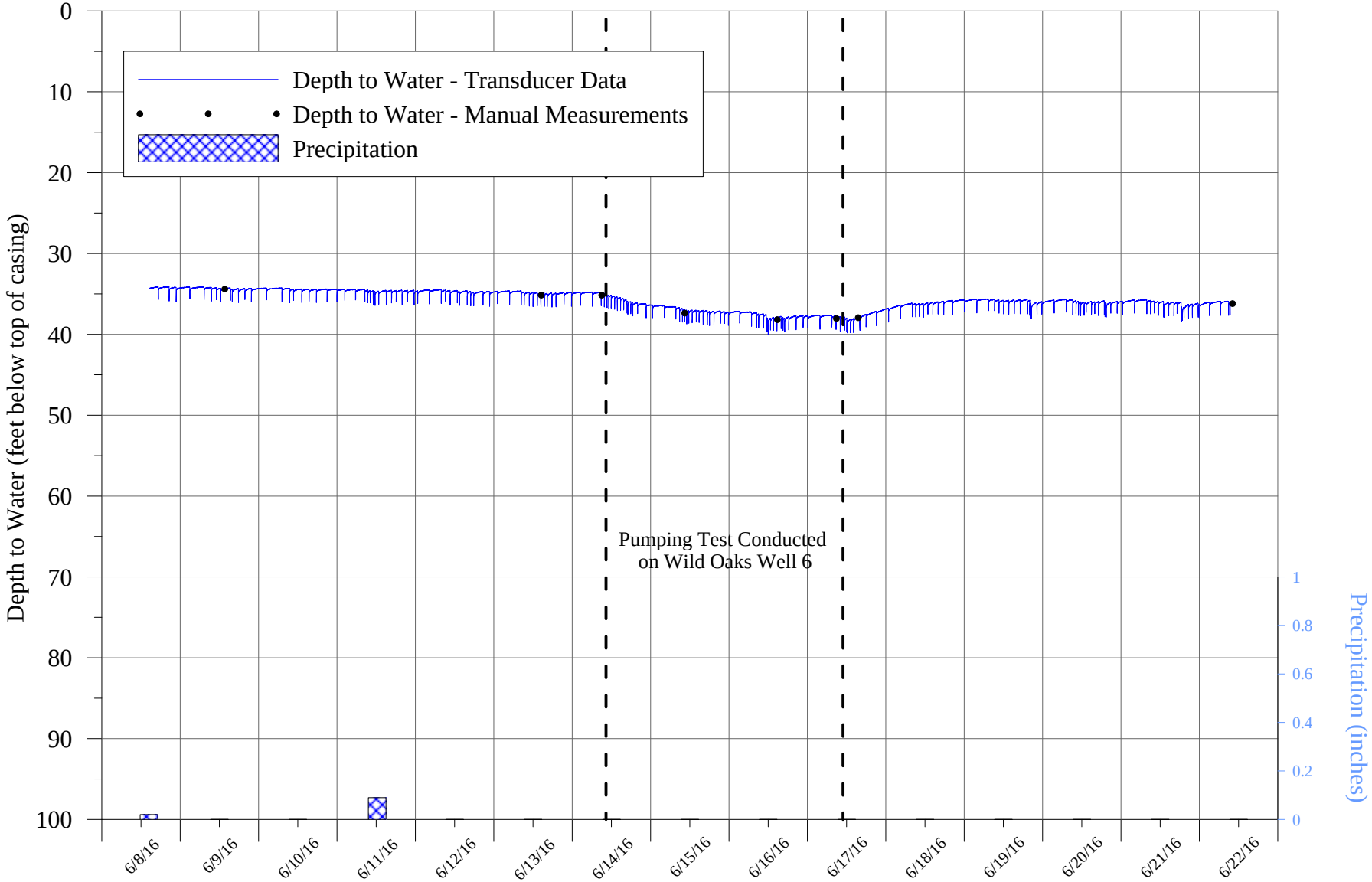

K:\Jobs\American Water Co\Wild Oaks\72-Hour Pumping Test (June 2016)\Hydrographs\Monitoring Wells\73 Nash Road_ss.grf

LEGGETTE, BRASHEARS & GRAHAM, INC.

NEW YORK AMERICAN WATER COMPANY
WILD OAKS WATER SYSTEM
LEWISBORO, NEW YORK

Hydrograph of Water-Level Measurements Collected from Well at 79 Nash Road During 72-Hour Pumping Test Conducted on Well 6 from June 14 Through 17, 2016

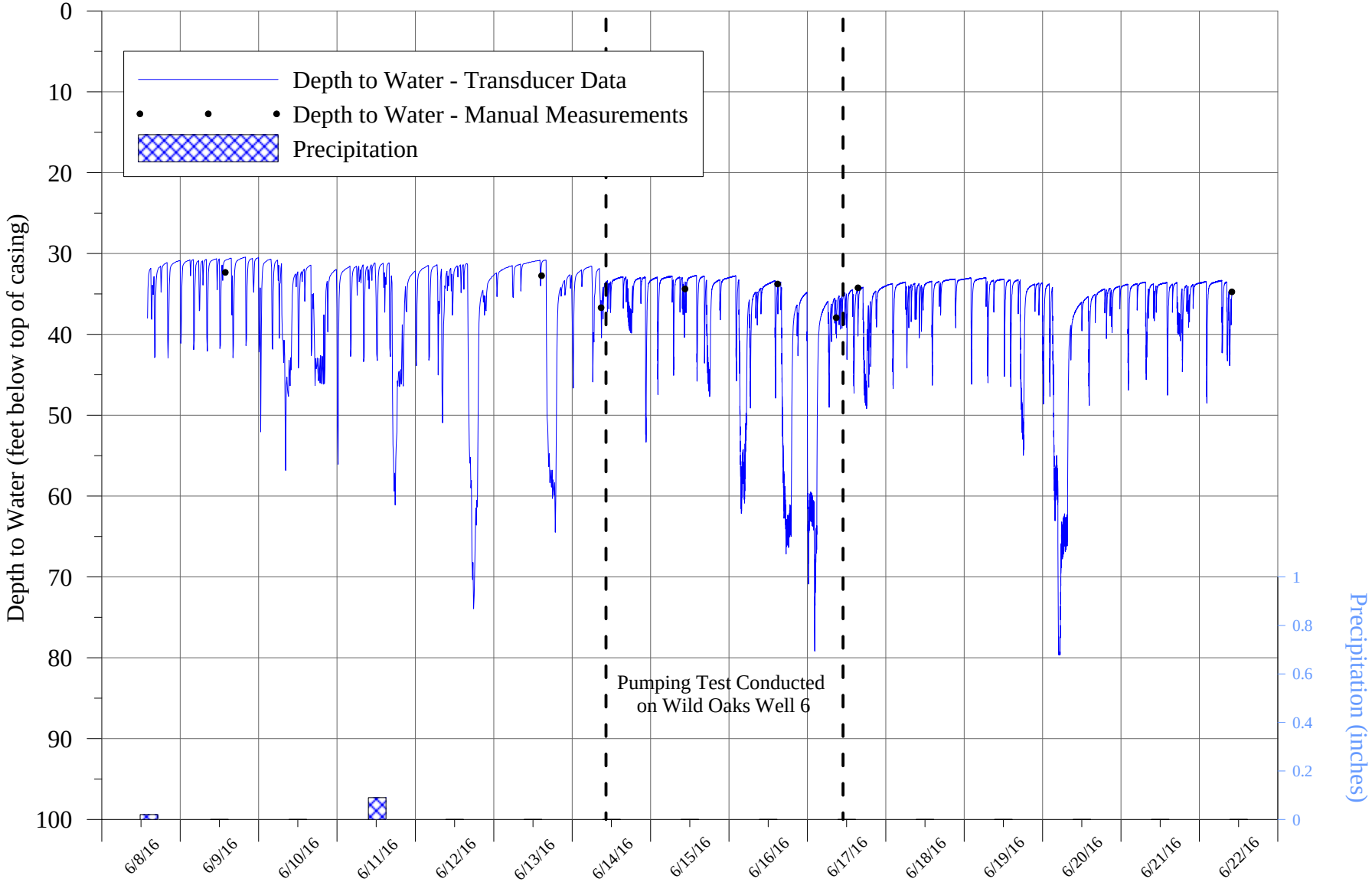

K:\Jobs\American Water Co\Wild Oaks\72-Hour Pumping Test (June 2016)\Hydrographs\Monitoring Wells\79 Nash Road_ss.grf

LEGGETTE, BRASHEARS & GRAHAM, INC.

NEW YORK AMERICAN WATER COMPANY
WILD OAKS WATER SYSTEM
LEWISBORO, NEW YORK

Summary of Manual Water-Level Measurements Collected from Offsite Wells Monitored During 72-Hour Pumping Test Conducted on Well 6, June 14 Through June 17, 2016

Date	Time	Depth to Water (ft btoc)
Well 3		
6/9/2016	13:22	2.52
6/13/2016	14:48	2.86
6/14/2016	9:13	2.84
6/14/2016	12:45	2.90
6/14/2016	15:26	2.93
6/15/2016	10:22	2.98
6/15/2016	13:08	3.00
6/15/2016	16:56	2.97
6/16/2016	9:27	2.91
6/16/2016	14:39	2.88
6/17/2016	8:40	3.32
6/17/2016	15:47	3.05
6/22/2016	9:43	3.38
73 Nash Road		
6/9/2016	13:39	34.40
6/13/2016	14:30	35.16
6/14/2016	9:03	35.16
6/15/2016	10:27	37.39
6/16/2016	14:48	38.19
6/17/2016	8:55	38.06
6/17/2016	15:35	37.94
6/22/2016	10:12	36.20
79 Nash Road		
6/9/2016	13:47	32.35
6/13/2016	14:38	32.74
6/14/2016	8:51	36.71
6/15/2016	10:34	34.39
6/16/2016	14:54	33.79
6/17/2016	8:48	37.94
6/17/2016	15:28	34.25
6/22/2016	9:57	34.75

ft btoc feet below top of casing

APPENDIX VIII

STREAM GAGING

STREAM GAGING

MAY 2015

LEGGETTE, BRASHEARS & GRAHAM, INC.

NEW YORK AMERICAN WATER COMPANY
WILD OAKS WATER SYSTEM
LEWISBORO, NEW YORK

Graph of Stream Flow Measurements Collected from Stream Gaging Locations During 72-Hour Pumping Tests Conducted on Wells 4 and 5, May 18 Through May 30, 2015

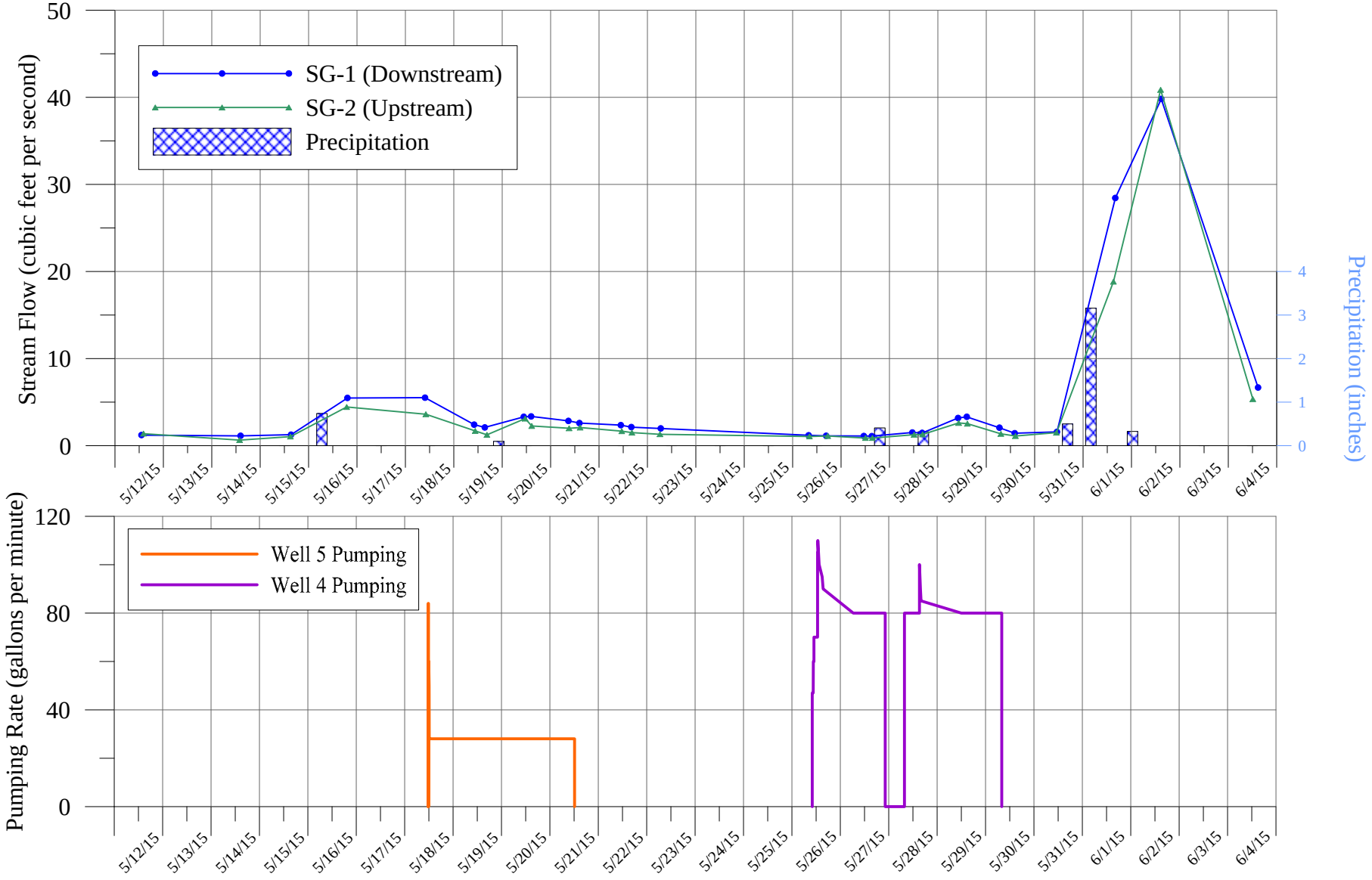

K:\Jobs\American Water Co\Wild Oak\72-Hour Pumping Test (May 2015)\Hydrographs\Stream Flow.grf

LEGGETTE, BRASHEARS & GRAHAM, INC.

NEW YORK AMERICAN WATER COMPANY
WILD OAKS WATER SYSTEM
LEWISBORO, NEW YORK

Stream Flow Measurements Collected from Onsite Stream Gaging Locations During 72-Hour Pumping Tests Conducted on Wells 4 and 5, from May 18 Through May 30, 2015

Date	Time	Stream Flow at SG-1 (cfs)	Date	Time	Stream Flow at SG-2 (cfs)
5/12/2015	13:12	1.21	5/12/2015	14:10	1.39
5/14/2015	14:17	1.13	5/14/2015	13:53	0.64
5/15/2015	15:22	1.26	5/15/2015	15:02	1.06
5/16/2015	19:15	5.48	5/16/2015	18:53	4.46
5/18/2015	9:45	5.52	5/18/2015	10:10	3.61
5/19/2015	10:09	2.42	5/19/2015	10:38	1.70
5/19/2015	15:21	2.10	5/19/2015	16:28	1.24
5/20/2015	10:42	3.31	5/20/2015	11:24	3.11
5/20/2015	14:22	3.36	5/20/2015	14:40	2.26
5/21/2015	8:50	2.85	5/21/2015	9:11	2.01
5/21/2015	14:19	2.60	5/21/2015	14:40	2.08
5/22/2015	10:50	2.37	5/22/2015	11:15	1.67
5/22/2015	16:00	2.13	5/22/2015	16:21	1.5
5/23/2015	6:39	1.98	5/23/2015	6:19	1.31
5/26/2015	7:58	1.20	5/26/2015	8:24	1.07
5/26/2015	16:38	1.13	5/26/2015	17:28	1.12
5/27/2015	11:17	1.11	5/27/2015	12:09	0.88
5/27/2015	15:18	1.10	5/27/2015	15:34	0.88
5/28/2015	11:22	1.51	5/28/2015	12:17	1.27
5/28/2015	16:13	1.46	5/28/2015	16:29	1.30
5/29/2015	10:02	3.18	5/29/2015	10:20	2.61
5/29/2015	14:20	3.31	5/29/2015	14:37	2.54
5/30/2015	6:31	2.07	5/30/2015	7:15	1.36
5/30/2015	14:05	1.43	5/30/2015	14:30	1.12
5/31/2015	11:05	1.58	5/31/2015	10:51	1.50
6/1/2015	16:00	28.45	6/1/2015	15:05	18.83
6/2/2015	14:45	39.82	6/2/2015	14:27	40.86
6/4/2015	14:45	6.69	6/4/2015	12:11	5.35

cfs cubic feet per second

NEW YORK AMERICAN WATER COMPANY
WILD OAKS WATER SYSTEM
LEWISBORO, NEW YORK

Hydrograph of Surface-Water Depth Measured at Staff-1 (Staff Gage) During 72-Hour Pumping Test Program Conducted on Well 4 and Well 5, May 18 Through May 30, 2015

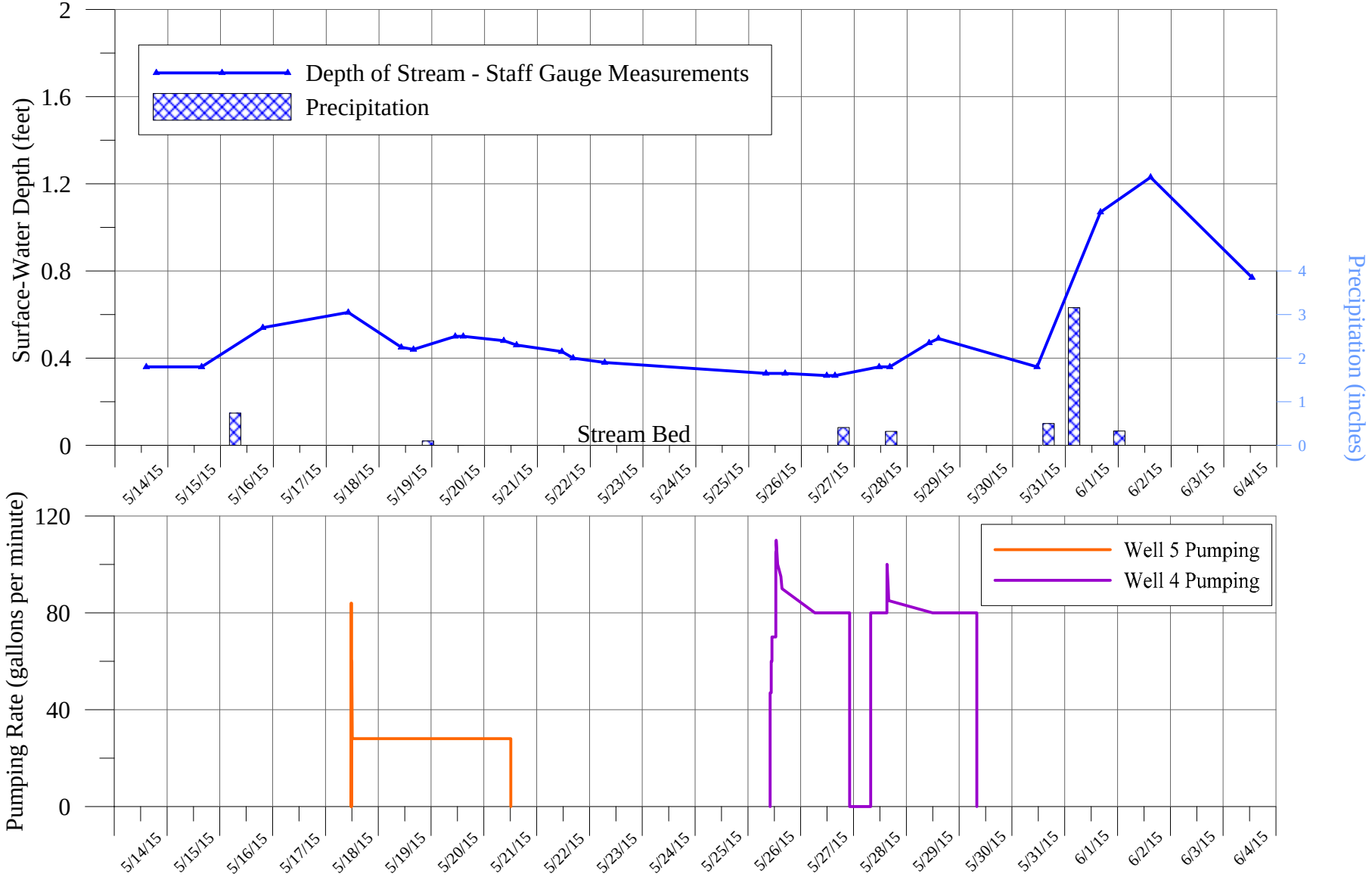

K:\Jobs\American Water Co\Wild Oak\72-Hour Pumping Test (May 2015)\Staff Gage.grf

LEGGETTE, BRASHEARS & GRAHAM, INC.

NEW YORK AMERICAN WATER COMPANY
WILD OAKS WATER SYSTEM
LEWISBORO, NEW YORK

Staff Gage Measurements Collected from During the
72-Hour Pumping Tests Conducted on Wells 4 and 5, from May 18 Through May 30, 2015

Date	Time	Surface-Water Depth (feet)
5/14/2015	14:14	0.36
5/15/2015	15:23	0.36
5/16/2015	19:16	0.54
5/18/2015	10:02	0.61
5/19/2015	10:10	0.45
5/19/2015	15:41	0.44
5/20/2015	10:41	0.5
5/20/2015	14:22	0.5
5/21/2015	8:44	0.48
5/21/2015	14:34	0.46
5/22/2015	11:07	0.43
5/22/2015	16:15	0.4
5/23/2015	6:38	0.38
5/26/2015	7:57	0.33
5/26/2015	16:37	0.33
5/27/2015	11:30	0.32
5/27/2015	15:16	0.32
5/28/2015	11:21	0.36
5/28/2015	16:12	0.36
5/29/2015	10:02	0.47
5/29/2015	14:19	0.49
5/31/2015	11:05	0.36
6/1/2015	15:58	1.07
6/2/2015	14:43	1.23
6/4/2015	12:47	0.77

STREAM GAGING

JUNE 2016

LEGGETTE, BRASHEARS & GRAHAM, INC.

NEW YORK AMERICAN WATER COMPANY
WILD OAKS WATER SYSTEM
LEWISBORO, NEW YORK

Graph of Streamflow Measurements Collected from Onsite Stream Gaging Locations During 72-Hour Pumping Test Conducted on Well 6 from June 14 Through 17, 2016

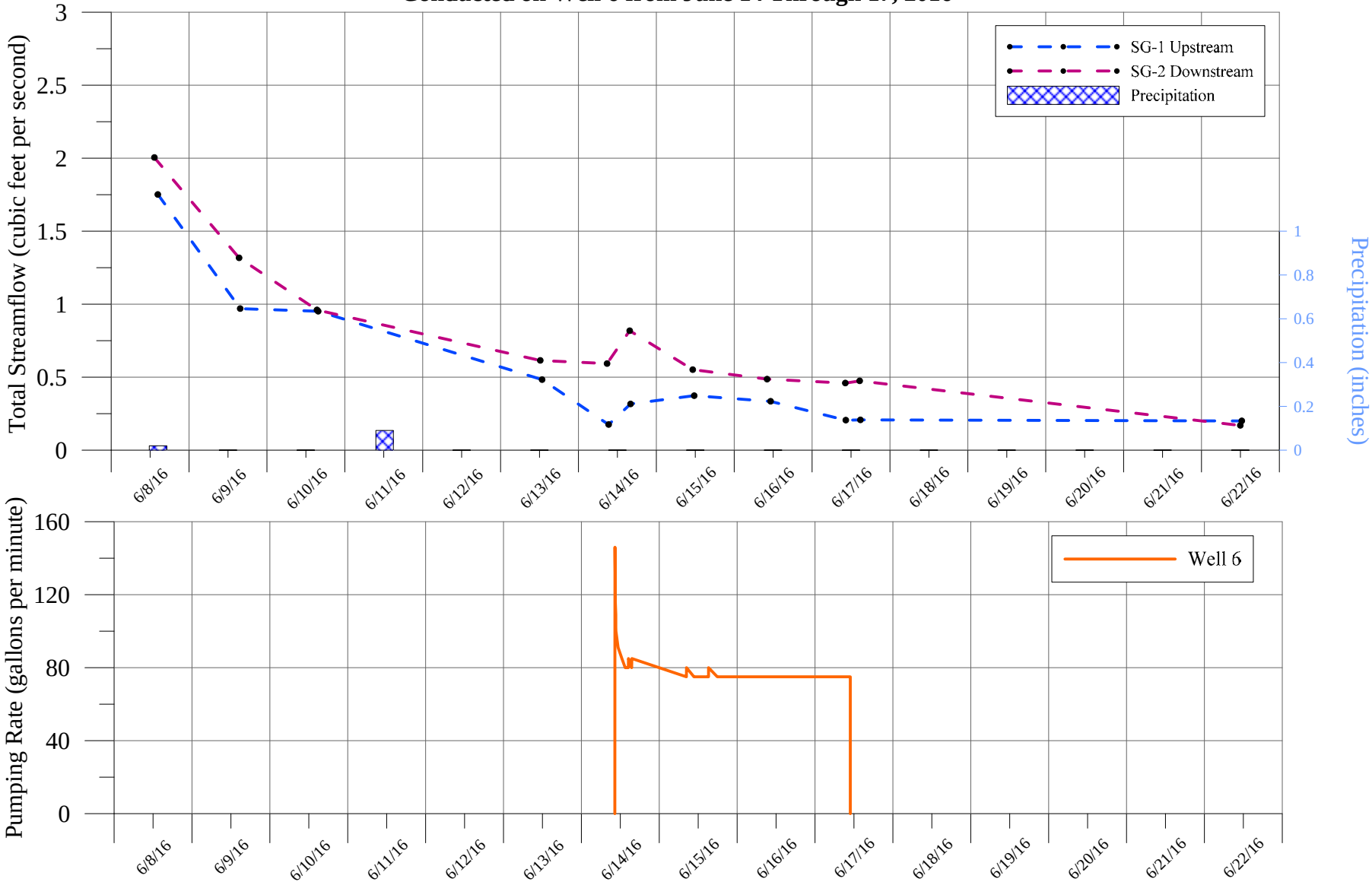

K:\Jobs\American Water Co\Wild Oaks\72-Hour Pumping Test (June 2016)\Hydrographs\Stream gauging\Stream Gauging.grf

LEGGETTE, BRASHEARS & GRAHAM, INC.

NEW YORK AMERICAN WATER COMPANY
WILD OAKS WATER SYSTEM
LEWISBORO, NEW YORK

Stream Flow Measurements Collected from Onsite Stream Gaging Locations During
72-Hour Pumping Test Conducted on Well 6, from June 14 Through 17, 2015

Date	Time	Stream Flow SG-1, Upstream (cfs)	Time	Stream Flow SG-2, Downstream (cfs)	Comments
6/8/2016	14:23	1.751	13:19	2.004	Pre-test background period.
6/9/2016	15:47	0.969	15:26	1.317	Pre-test background period.
6/10/2016	15:49	0.951	15:28	0.960	Pre-test background period.
6/13/2016	12:49	0.483	12:14	0.614	Pre-test background period.
6/14/2016	9:18	0.176	8:49	0.593	Pre-test background period.
6/14/2016	16:04	0.316	15:49	0.818	Well 6 pump started at 10:20. Well 6 pumping.
6/15/2016	11:40	0.373	11:14	0.551	Well 6 pumping.
6/16/2016	11:14	0.334	10:09	0.486	Well 6 pumping.
6/17/2016	10:25	0.205	10:15	0.459	Well 6 pumping.
6/17/2016	14:55	0.207	14:40	0.474	Post-test period. Well 6 shut down at 10:54.
6/22/2016	12:25	0.200	12:00	0.169	Post-test period.

cfs cubic feet per second

APPENDIX IX

WATER QUALITY

WATER QUALITY

WELL 4

EnviroTest Laboratories Inc.

ANALYTICAL REPORT

Job Number: 420-90837-1

SDG Number: Wild Oak

Job Description: LBG, Inc.

For:
Leggette, Brashears & Graham, Inc.
4 Research Drive
Shelton, CT 06464

Attention: Stacy Stieber

Debra Bayer
Customer Service Manager
dbayer@envirotestlaboratories.com
06/16/2015

NYSDOH ELAP does not certify for all parameters. EnviroTest Laboratories does hold certification for all analytes where certification is offered by ELAP unless otherwise specified. Pursuant to NELAP, this report may not be reproduced, except in full, without written approval of the laboratory. EnviroTest Laboratories Inc. certifies that the analytical results contained herein apply only to the samples tested as received by our laboratory. All questions regarding this report should be directed to the EnviroTest Customer Service Representative.

EnviroTest Laboratories, Inc. Certifications and Approvals: NYSDOH 10142, NJDEP NY015, CTDOPH PH-0554

Job Narrative
420-J90837-1

Receipt
All samples were received in good condition within temperature requirements.

GC/MS VOA
No analytical or quality issues were noted.

Metals
No analytical or quality issues were noted.

General Chemistry
Method SM 4500 H+ B: The holding time for pH is 15 minutes, the samples were received outside of the holding time.

No other analytical or quality issues were noted.

Biology
No analytical or quality issues were noted.

METHOD SUMMARY

Client: Leggette, Brashears & Graham, Inc.

Job Number: 420-90837-1
SDG Number: Wild Oak

Description	Lab Location	Method	Preparation Method
Matrix: Water			
ICP Metals by 200.7	EnvTest	EPA 200.7 Rev 4.4	
Sample Filtration	EnvTest		FILTRATION
200 Series Drinking Water Prep Determination Step	EnvTest		EPA 200
Total Metals Digestion for 200.7	EnvTest		EPA 200.7
ICPMS Metals by 200.8	EnvTest	EPA 200.8 Rev.5.4	
200 Series Drinking Water Prep Determination Step	EnvTest		EPA 200
Total Metals Digestion for 200.8	EnvTest		EPA 200.8
Mercury in Water by CVAA	EnvTest	EPA 245.1 Rev.3.0	
Digestion for CVAA Mercury in Waters	EnvTest		EPA 245.1
Anions by Ion Chromatography	EnvTest	MCAWW 300.0	
Anions by Ion Chromatography	EnvTest	EPA 300.0 Rev. 2.1	
EPA 504.1 EDB	Pace	EPA 504.1	
EPA 505 Pesticide/PCB	Pace	EPA 505	
EPA 515 Chlorinated Acids	Pace	EPA 515	
Purgeable Organic Compounds in Water by GC/MS	EnvTest	EPA-DW 524.2	
EPA 525.2 Semivolatile Organics	Pace	EPA 525.2	
EPA 531.1 Carbamate Pesticides in Drinki	Pace	EPA 531.1	
EPA 900 Series GA/GB/RA226/RA228/Gamma	Pace	EPA 900	
Uranium	Pace	STL-STL EPA	
Heterotropic Plate Count	EnvTest	IDEXX SIMPLATE	
Odor, Threshold Test	EnvTest	SM20 SM 2150B	
Alkalinity, Titration Method	EnvTest	SM21 SM 2320B-97,-11	
Corrosivity LSI Calculation	EnvTest	SM20 SM 2330B	
Hardness by Calculation	EnvTest	SM20 SM 2340B-97,-11	
pH	EnvTest	SM19 SM 4500 H+ B	
Nitrite by Colormetric	EnvTest	SM20 SM 4500B	
Total Coliform and Escherichia coli by Colilert - Presence/Absence	EnvTest	SMWW SM 9223	
Apparent Color	EnvTest	SM21 SM2120B-01,11	
Turbidity	EnvTest	SM21 SM2130B-01,11	
Total Dissolved Solids (Dried at 180 °C)	EnvTest	SM21 SM2540C-97,11	
Cyanide, Total: Colorimetric Method	EnvTest	SM21 SM4500 CN E-99	
Cyanide: Distillation	EnvTest		SM21 SM 4500 CN C
General Sub Contract Method	Pace	Subcontract	

METHOD SUMMARY

Client: Leggette, Brashears & Graham, Inc.

Job Number: 420-90837-1
SDG Number: Wild Oak

Description	Lab Location	Method	Preparation Method

Lab References:

EnvTest = EnviroTest

Pace = Pace Analytical - Ormond Beach

Method References:

EPA = US Environmental Protection Agency

EPA-DW = "Methods For The Determination Of Organic Compounds In Drinking Water", EPA/600/4-88/039, December 1988 And Its Supplements.

IDEXX =

MCAWW = "Methods For Chemical Analysis Of Water And Wastes", EPA-600/4-79-020, March 1983 And Subsequent Revisions.

SM19 = "Standard Methods For The Examination Of Water And Wastewater", 19Th Edition, 1995."

SM20 = "Standard Methods For The Examination Of Water And Wastewater", 20th Edition."

SM21 = "Standard Methods For The Examination Of Water And Wastewater", 21st Edition

SMWW = "Standard Methods for the Examination of Water and Wastewater"

STL-STL = Severn Trent Laboratories, St. Louis, Facility Standard Operating Procedure.

METHOD / ANALYST SUMMARY

Client: Leggette, Brashears & Graham, Inc.

Job Number: 420-90837-1
SDG Number: Wild Oak

Method	Analyst	Analyst ID
EPA-DW 524.2	Andersen, Eric C	ECA
EPA 200.7 Rev 4.4	Goldstein, Amy	AG
EPA 200.8 Rev.5.4	McPhillips, Julie	JM
EPA 200.8 Rev.5.4	Palentino, Gus J	GJP
EPA 245.1 Rev.3.0	Goldstein, Amy	AG
SM20 SM 2340B-97,-11	Goldstein, Amy	AG
MCAWW 300.0	Sirico, Derek	DS
EPA 300.0 Rev. 2.1	Sirico, Derek	DS
IDEXX SIMPLATE	Travis, Lyndsey	LT
SM20 SM 2150B	Travis, Lyndsey	LT
SM21 SM 2320B-97,-11	Sirico, Derek	DS
SM20 SM 2330B	Cusack, Renee	RC
SM19 SM 4500 H+ B	Travis, Lyndsey	LT
SM20 SM 4500B	Sirico, Derek	DS
SMWW SM 9223	Travis, Lyndsey	LT
SM21 SM2120B-01,11	Travis, Lyndsey	LT
SM21 SM2130B-01,11	Travis, Lyndsey	LT
SM21 SM2540C-97,11	Travis, Lyndsey	LT
SM21 SM4500 CN E-99	Sirico, Derek	DS

SAMPLE SUMMARY

Client: Leggette, Brashears & Graham, Inc.

Job Number: 420-90837-1
SDG Number: Wild Oak

Lab Sample ID	Client Sample ID	Client Matrix	Date/Time Sampled	Date/Time Received
420-90837-1	Well 4 - 5/29	Water	05/29/2015 1110	05/29/2015 1225

Client: Leggette, Brashears & Graham, Inc.

Job Number: 420-90837-1
Sdg Number: Wild Oak

Client Sample ID: **Well 4 - 5/29**

Lab Sample ID: 420-90837-1
Client Matrix: Water

Date Sampled: 05/29/2015 1110
Date Received: 05/29/2015 1225

524.2 Purgeable Organic Compounds in Water by GC/MS

Method: 524.2
Preparation: N/A
Dilution: 1.0
Date Analyzed: 06/01/2015 1348
Date Prepared: N/A

Analysis Batch: 420-87368

Instrument ID: Agilent 7890A/5975C
Lab File ID: X060107.D
Initial Weight/Volume: 5 mL
Final Weight/Volume: 5 mL

Analyte	Result (ug/L)	Qualifier	RL
1,1,1,2-Tetrachloroethane	<0.500		0.500
1,1,1-Trichloroethane	<0.500		0.500
1,1,2,2-Tetrachloroethane	<0.500		0.500
1,1,2-Trichloroethane	<0.500		0.500
1,1-Dichloroethane	<0.500		0.500
1,1-Dichloroethene	<0.500		0.500
1,1-Dichloropropene	<0.500		0.500
1,2,3-Trichlorobenzene	<0.500		0.500
1,2,3-Trichloropropane	<0.500		0.500
1,2,4-Trichlorobenzene	<0.500		0.500
1,2,4-Trimethylbenzene	<0.500		0.500
1,2-Dichloroethane	<0.500		0.500
1,2-Dichlorobenzene	<0.500		0.500
1,2-Dichloropropane	<0.500		0.500
1,3-Dichloropropane	<0.500		0.500
1,4-Dichlorobenzene	<0.500		0.500
2,2-Dichloropropane	<0.500		0.500
Benzene	<0.500		0.500
Bromobenzene	<0.500		0.500
Bromochloromethane	<0.500		0.500
Bromomethane	<0.500		0.500
n-Butylbenzene	<0.500		0.500
cis-1,2-Dichloroethene	<0.500		0.500
cis-1,3-Dichloropropene	<0.500		0.500
Carbon tetrachloride	<0.500		0.500
Chlorobenzene	<0.500		0.500
Chloroethane	<0.500		0.500
Chloromethane	<0.500		0.500
Dibromomethane	<0.500		0.500
Ethylbenzene	<0.500		0.500
Dichlorodifluoromethane	<0.500		0.500
Hexachlorobutadiene	<0.500		0.500
Isopropylbenzene	<0.500		0.500
p-Isopropyltoluene	<0.500		0.500
Methylene Chloride	<0.500		0.500
m-Xylene & p-Xylene	<1.00		1.00
Methyl tert-butyl ether	<0.500		0.500
o-Xylene	<0.500		0.500
Tetrachloroethene	<0.500		0.500
Toluene	<0.500		0.500
trans-1,2-Dichloroethene	<0.500		0.500
trans-1,3-Dichloropropene	<0.500		0.500
Trichloroethene	<0.500		0.500
tert-Butylbenzene	<0.500		0.500

Client: Leggette, Brashears & Graham, Inc.

Job Number: 420-90837-1
Sdg Number: Wild Oak

Client Sample ID: **Well 4 - 5/29**

Lab Sample ID: 420-90837-1
Client Matrix: Water

Date Sampled: 05/29/2015 1110
Date Received: 05/29/2015 1225

524.2 Purgeable Organic Compounds in Water by GC/MS

Method: 524.2
Preparation: N/A
Dilution: 1.0
Date Analyzed: 06/01/2015 1348
Date Prepared: N/A

Analysis Batch: 420-87368

Instrument ID: Agilent 7890A/5975C
Lab File ID: X060107.D
Initial Weight/Volume: 5 mL
Final Weight/Volume: 5 mL

Analyte	Result (ug/L)	Qualifier	RL
Trichlorofluoromethane	<0.500		0.500
Vinyl chloride	<0.500		0.500
Xylenes, Total	<1.50		1.50
Styrene	<0.500		0.500
sec-Butylbenzene	<0.500		0.500
1,3,5-Trimethylbenzene	<0.500		0.500
N-Propylbenzene	<0.500		0.500
1,3-Dichlorobenzene	<0.500		0.500
2-Chlorotoluene	<0.500		0.500
4-Chlorotoluene	<0.500		0.500

Surrogate	%Rec	Acceptance Limits
4-Bromofluorobenzene	101	71 - 120
Toluene-d8 (Surr)	103	79 - 121
1,2-Dichloroethane-d4 (Surr)	112	70 - 128

Client: Leggette, Brashears & Graham, Inc.

Job Number: 420-90837-1
Sdg Number: Wild Oak

Client Sample ID: **Well 4 - 5/29**

Lab Sample ID:	420-90837-1	Date Sampled:	05/29/2015 1110
Client Matrix:	Water	Date Received:	05/29/2015 1225

200.7 Rev 4.4 ICP Metals by 200.7

Method:	200.7 Rev 4.4	Analysis Batch: 420-87414	Instrument ID:	Thermo ICP
Preparation:	200	Prep Batch: 420-87349	Lab File ID:	N/A
Dilution:	1.0		Initial Weight/Volume:	50 mL
Date Analyzed:	06/02/2015 2253		Final Weight/Volume:	50 mL
Date Prepared:	06/01/2015 1732			

Analyte	Result (ug/L)	Qualifier	RL
Iron	<60.0		60.0
Manganese	18.8		10.0
Sodium	6600		200
Zinc	<20.0		20.0

200.7 Rev 4.4 ICP Metals by 200.7-Dissolved

Method:	200.7 Rev 4.4	Analysis Batch: 420-87466	Instrument ID:	Thermo ICP
Preparation:	200.7	Prep Batch: 420-87282	Lab File ID:	N/A
Dilution:	1.0		Initial Weight/Volume:	50 mL
Date Analyzed:	06/04/2015 0119		Final Weight/Volume:	50 mL
Date Prepared:	05/29/2015 1740			

Analyte	Result (ug/L)	Qualifier	RL
Iron	<60.0		60.0
Manganese	17.9		10.0

Client: Leggette, Brashears & Graham, Inc.

Job Number: 420-90837-1
Sdg Number: Wild Oak

Client Sample ID: **Well 4 - 5/29**

Lab Sample ID: 420-90837-1
Client Matrix: Water

Date Sampled: 05/29/2015 1110
Date Received: 05/29/2015 1225

200.8 Rev.5.4 ICPMS Metals by 200.8

Method:	200.8 Rev.5.4	Analysis Batch: 420-87394	Instrument ID:	Perkin Elmer ELAN
Preparation:	200	Prep Batch: 420-87349	Lab File ID:	N/A
Dilution:	1.0		Initial Weight/Volume:	50 mL
Date Analyzed:	06/02/2015 1609		Final Weight/Volume:	50 mL
Date Prepared:	06/01/2015 1732			

Analyte	Result (ug/L)	Qualifier	RL
Lead	<1.00		1.00
Arsenic	<1.40		1.40
Beryllium	<0.300		0.300
Cadmium	<1.00		1.00
Chromium	<7.00		7.00
Nickel	1.99		0.500
Antimony	<0.400		0.400
Thallium	<0.300		0.300
Barium	6.77		2.00
Selenium	3.43		2.00

Method:	200.8 Rev.5.4	Analysis Batch: 420-87536	Instrument ID:	Perkin Elmer ELAN
Preparation:	200.8	Prep Batch: 420-87387	Lab File ID:	N/A
Dilution:	1.0		Initial Weight/Volume:	50 mL
Date Analyzed:	06/05/2015 2030		Final Weight/Volume:	50 mL
Date Prepared:	06/02/2015 1030			

Analyte	Result (ug/L)	Qualifier	RL
Silver	<1.00		1.00

245.1 Rev.3.0 Mercury in Water by CVAA

Method:	245.1 Rev.3.0	Analysis Batch: 420-87715	Instrument ID:	Perkin Elmer FIMS
Preparation:	245.1	Prep Batch: 420-87645	Lab File ID:	N/A
Dilution:	1.0		Initial Weight/Volume:	25 mL
Date Analyzed:	06/11/2015 1108		Final Weight/Volume:	25 mL
Date Prepared:	06/10/2015 1220			

Analyte	Result (ug/L)	Qualifier	RL
Mercury	<0.200		0.200

Analytical Data

Client: Leggette, Brashears & Graham, Inc.

Job Number: 420-90837-1
Sdg Number: Wild Oak

Client Sample ID: **Well 4 - 5/29**

Lab Sample ID:	420-90837-1	Date Sampled:	05/29/2015 1110
Client Matrix:	Water	Date Received:	05/29/2015 1225

SM 2340B-97,-11 Hardness by Calculation

Method:	SM 2340B-97,-11	Analysis Batch: 420-87417	Instrument ID:	None
Preparation:	N/A		Lab File ID:	N/A
Dilution:	1.0		Initial Weight/Volume:	
Date Analyzed:	06/02/2015 2253		Final Weight/Volume:	
Date Prepared:	N/A			

Analyte	Result (mg/L)	Qualifier	RL
Calcium hardness as calcium carbonate	63.0		1.25

Client: Leggette, Brashears & Graham, Inc.

Job Number: 420-90837-1
Sdg Number: Wild Oak

Biology

Client Sample ID: **Well 4 - 5/29**

Lab Sample ID: 420-90837-1
Client Matrix: Water

Date Sampled: 05/29/2015 1110
Date Received: 05/29/2015 1225

Analyte	Result	Qual	Units	Dil	Method
Coliform, Total	Present	g	CFU/100mL	1.0	SM 9223
Anly Batch: 420-87279	Date Analyzed	05/29/2015 1735			
Escherichia coli	Absent		CFU/100mL	1.0	SM 9223
Anly Batch: 420-87279	Date Analyzed	05/29/2015 1735			

Analyte	Result	Qual	Units	RL	Dil	Method
Heterotrophic Plate Count	<2.00		CFU/mL	2.00	1.0	SIMPLATE
Anly Batch: 420-87322	Date Analyzed	05/29/2015 1655				

General Chemistry

Client: Leggette, Brashears & Graham, Inc.

Job Number: 420-90837-1
Sdg Number: Wild Oak

General Chemistry

Client Sample ID: **Well 4 - 5/29**

Lab Sample ID: 420-90837-1
Client Matrix: Water

Date Sampled: 05/29/2015 1110
Date Received: 05/29/2015 1225

Analyte	Result	Qual	Units	RL	Dil	Method
Nitrate as N	<0.250		mg/L	0.250	1.0	300.0
	Anly Batch: 420-87335	Date Analyzed	05/29/2015 2037			

Analyte	Result	Qual	Units	Dil	Method
Langelier Index	0.410		NONE	1.0	SM 2330B
	Anly Batch: 420-87767	Date Analyzed	06/12/2015 1344		

Client: Leggette, Brashears & Graham, Inc.

Job Number: 420-90837-1
Sdg Number: Wild Oak

General Chemistry

Client Sample ID: **Well 4 - 5/29**

Lab Sample ID: 420-90837-1
Client Matrix: Water

Date Sampled: 05/29/2015 1110
Date Received: 05/29/2015 1225

Analyte	Result	Qual	Units	RL	Dil	Method
Alkalinity	81.7		mg/L	5.00	1.0	SM 2320B-97,-11
Anly Batch: 420-87607	Date Analyzed		06/08/2015 1525			
Total Dissolved Solids	974		mg/L	5.00	1.0	SM2540C-97,11
Anly Batch: 420-87552	Date Analyzed		06/05/2015 1510			
Chloride	2.69		mg/L	1.50	1.0	300.0 Rev. 2.1
Anly Batch: 420-87335	Date Analyzed		05/29/2015 2037			
Sulfate	17.1		mg/L	5.00	1.0	300.0 Rev. 2.1
Anly Batch: 420-87335	Date Analyzed		05/29/2015 2037			
Fluoride	<0.500		mg/L	0.500	1.0	300.0 Rev. 2.1
Anly Batch: 420-87335	Date Analyzed		05/29/2015 2037			
Cyanide, Total	<0.00500		mg/L	0.00500	1.0	SM4500 CN E-99
Anly Batch: 420-87713	Date Analyzed		06/11/2015 1030			
Prep Batch: 420-87545	Date Prepared:		06/01/2015 1000			
Apparent Color	<2.00		Pt-Co	2.00	1.0	SM2120B-01,11
Anly Batch: 420-87312	Date Analyzed		05/29/2015 1736			
pH@color measurement	7.83		SU	2.00	1.0	SM2120B-01,11
Anly Batch: 420-87312	Date Analyzed		05/29/2015 1736			
Turbidity	0.199		NTU	0.100	1.0	SM2130B-01,11
Anly Batch: 420-87310	Date Analyzed		05/29/2015 1725			
Odor	1.00		T.O.N.	1.00	1.0	SM 2150B
Anly Batch: 420-87311	Date Analyzed		05/29/2015 1730			
Temp @ Odor Measurement	60.0		Degrees C	5.00	1.0	SM 2150B
Anly Batch: 420-87311	Date Analyzed		05/29/2015 1730			
pH	7.83	H	SU	0.200	1.0	SM 4500 H+ B
Anly Batch: 420-87313	Date Analyzed		05/29/2015 1715			
Temp @ pH Measurement	19.3		Degrees C	5.00	1.0	SM 4500 H+ B
Anly Batch: 420-87313	Date Analyzed		05/29/2015 1715			
Nitrite as N	<0.0100		mg/L	0.0100	1.0	SM 4500B
Anly Batch: 420-87330	Date Analyzed		05/29/2015 1700			

DATA REPORTING QUALIFIERS

Client: Leggette, Brashears & Graham, Inc.

Job Number: 420-90837-1
Sdg Number: Wild Oak

Lab Section	Qualifier	Description
General Chemistry		
	H	Sample was prepped or analyzed beyond the specified holding time
Biology		
	g	Result fails applicable NYS drinking water standards

Definitions and Glossary

Client: Leggette, Brashears & Graham, Inc.

Job Number: 420-90837-1

Sdg Number: Wild Oak

Abbreviation	These commonly used abbreviations may or may not be present in this report.
%R	Percent Recovery
DL, RA, RE	Indicates a Dilution, Reanalysis or Reextraction.
EPA	United States Environmental Protection Agency
MDL	Method Detection Limit - an estimate of the minimum amount of a substance that an analytical process can reliably detect. A MDL is analyte- and matrix-specific and may be laboratory-dependent.
ND	Not detected at the reporting limit (or MDL if shown).
QC	Quality Control
RL	Reporting Limit - the minimum levels, concentrations, or quantities of a target variable (e.g., target analyte) that can be reported with a specified degree of confidence.
RPD	Relative Percent Difference - a measure of the relative difference between two points.

EnviroTest Laboratories, Inc.

CHAIN OF CUSTODY

90837

REPORT# (Lab Use Only)

Lab Name: EnviroTest Laboratories
Address & Phone: 315 Fullerton Avenue, Newburgh, New York 12550 845-562-0890

PROJECT REFERENCE: Wild Oak	PROJECT NO.	PROJECT LOCATION
ENVIROTEST PROJECT MANAGER: Debra Bayer	P.O. NUMBER	TOWN: Lewisboro
CLIENT (SITE) PM: LBG, Inc.	CLIENT PHONE: 203-929-8555	CLIENT FAX
CLIENT NAME: Stacy Stieber		
CLIENT ADDRESS: 4 Research Drive, Suite 301, Shelton, CT 06484		
COMPANY CONTRACTING THIS WORK (if applicable):		

PAGE 1 of 1

TURNAROUND TIME: NORMAL X / QUICK ___ / VERBAL ___

#OF COOLERS: 1

SAMPLE DATE	SAMPLE TIME	SAMPLE IDENTIFICATION	COMPOSITE (C) OR GRAB (G) INDICATE	AQUEOUS (WATER)	O (Drinking Water) or M (Waste Water) indicate	SOLID OR SEMISOLID	OTHER Specify	Bladder	40ml Vials HCL	40ml Sodium Thio.	250ml Amber Sodium Thio.	Liter Amber HCl/Na2SO3	250ml Plastic Nitric Acid	40ml Mon/Sod.Thio(liquid)	Liter Plastic	250ml Plastic Sodium Hyd.	125ml Plastic Sterile	Gallon Plastic Nitric	40ml Vials Unpres	REMARKS
5/29/15	1110	well 4-5/29		X				2	3	2	1	3	1	2	4	1	2	1	3	Table 8B (Sb,As,Ba,Be,Cd,Cr,Cn,Hg,Ni
																				Se,Tl,F)
																				Table 8C (NO3,NO2)
								2-liter Amber unpres.												Table 8D (Cl,Fe,Mn,Ag,Na,SO4,Zn,Odor,Color)
								1-250ml Amber Unpres.												524.2 (POC,MTBE,Vinyl Chloride)
								2-250ml Plastic Unpres.												SOCs (504,508,515,525,531)
								30 Total Containers												Additional Tests (Total coliform
								29	03											thru Zinc)
																				Diss. Fe, Mn
																				Radon, Gross Alpha/Beta,
																				Radium 226/228, Total Uranium
																				~~MPA/Crypto/Giardia~~ 3

RELINQUISHED BY: (SIGNATURE) Pamela Ford	COMPANY LBG	DATE 5/29/15	TIME 1225	RECEIVED BY: (SIGNATURE)	COMPANY	DATE	TIME
SAMPLED BY: (SIGNATURE) Pamela Ford	COMPANY LBG	DATE 5/29/15	TIME 1110	RECEIVED BY: (SIGNATURE)	COMPANY	DATE	TIME
RELINQUISHED BY: (SIGNATURE)	COMPANY	DATE	TIME	RECEIVED BY: (SIGNATURE)	COMPANY	DATE	TIME

SUBCONTACT: PACE-SOC,Radio,Radon; MPA - Mohawk

RECEIVED FOR LABORATORY BY: (SIGNATURE) Ashley Elmendorf	DATE 5/29/15	TIME 12:25	CUSTODY INTACT YES NO	Cooler Temp: 5.4°C

LABORATORY REMARKS: ICE ✓ pH___ CL2___ Reveiwed by___

LOGIN SAMPLE RECEIPT CHECK LIST

Client: Leggette, Brashears & Graham, Inc.

Job Number: 420-90837-1
SDG Number: Wild Oak

Login Number: **90837**

Question	T/F/NA	Comment
Samples were collected by ETL employee as per SOP-SAM-1	NA	
The cooler's custody seal, if present, is intact.	False	
The cooler or samples do not appear to have been compromised or tampered with.	True	
Samples were received on ice.	True	
Cooler Temperature is recorded.	True	5.4C
Cooler Temp. is within method specified range.(0-6 C PW, 0-8 C NPW, or BAC <10 C	True	
If false, was sample received on ice within 6 hours of collection.	NA	
Based on above criteria cooler temperature is acceptable.	True	
COC is present.	True	
COC is filled out in ink and legible.	True	
COC is filled out with all pertinent information.	True	
There are no discrepancies between the sample IDs on the containers and the COC.	True	
Samples are received within Holding Time.	True	
Sample containers have legible labels.	True	
Containers are not broken or leaking.	True	
Sample collection date/times are provided.	True	
Appropriate sample containers are used.	True	
Sample bottles are completely filled.	True	
There is sufficient vol. for all requested analyses, incl. any requested MS/MSDs	True	
VOA sample vials do not have headspace or bubble is <6mm (1/4") in diameter.	True	
If necessary, staff have been informed of any short hold time or quick TAT needs	True	
Multiphasic samples are not present.	True	
Samples do not require splitting or compositing.	True	

MVWA WATER QUALITY LABORATORY

One Kennedy Plaza
Utica, NY 13502

Phone: (315) 792-0301
Fax: (315) 792-5201

MOHAWK VALLEY WATER AUTHORITY

Laboratory Analysis Report

The Water Quality Laboratory of the Mohawk Valley Water Authority warrants, to the best of its knowledge and belief, the accuracy of the analytical test results contained in this report, but makes no other warranty, expressed or implied, especially no warranties of merchantability or fitness for a particular purpose. By the Client's acceptance and/or use of this report, the Client agrees that MVWA is hereby released from any and all liabilities, claims, damages or causes of action affecting or which may affect the Client as regards to the results contained in this report. The Client further agrees that the only remedy available to the Client in the event of proven non-conformity with the above warranty shall be for MVWA to re-perform the analytical test(s) at no charge to the Client. The data contained in this report are for the exclusive use of the Client to whom it is addressed, and the release of these data to any other party, or the use of the name, trademark or service mark of MVWA especially for the use of advertising to the general public, is strictly prohibited without express prior written consent of MVWA.

This report was reviewed by: _____ **Date:** 6/1/15

Philip Tangorra, QA Officer

MOHAWK VALLEY WATER AUTHORITY

Final Result Report for *ENVIROTEST LABORATORIES, INC.*

Sample ID:	**05/27/15 ENVIROTEST – WILD OAKS**
LIMS #:	**90562**
Client:	**#1905 – Envirotest Laboratories, Inc.**
Source:	**Wild Oaks Water System – Well #4 Water**

Method 1623 QUALITY CONTROL

Weekly Method Blank	***Giardia* Count: 0**	***Cryptosporidium* Count: 0**
Weekly OPR Sample	***Giardia* % Recovery: 50.0**	***Cryptosporidium* % Recovery: 62.6**

SAMPLE RESULTS

	Method	Total FA Count	Volume Analyzed	# cysts/L
Giardia	EPA 1623	0	10.00 L	0.000
Cryptosporidium	EPA 1623	0	10.00 L	0.000

	Method	Result
MPA	NYSDOH Modified MPA	Positive *(see attached report)*

MATRIX SPIKE RESULTS

	# Spiked:	# Recovered:	% Recovery
Giardia	N/A		
Cryptosporidium	N/A		

Approved: Philip A. Tangorra

Philip A. Tangorra
QA Officer

Analysis performed at:
Mohawk Valley Water Authority
Telephone (315) 792-0301 • One Kennedy Plaza • Utica, NY 13502 • FAX (315) 792-5201
USEPA ID#: NY01505 New York State ELAP ID#: 10319 Pennsylvania DEP ID#: 68-03428

MEMBER OF:
American Water Works Association (AWWA) • Water Research Foundation • NYAAEL

90724E

Mohawk Valley Water Authority
Water Quality Department
One Kennedy Plaza, 3rd Floor Lab
Utica, NY 13502
www.mvwa.us

Connie Schreppel, Director
Philip Tangorra, Research Scientist

Telephone: (315) 792-0338
Fax: (315) 792-5201

CHAIN OF CUSTODY

Sample ID: Well 4 - 5/27

Internal Tracking #: _____
(Internal use only)

Client:	L.B.C.
Source:	Wild Oak Water System

SAMPLE COLLECTION

Sampler	Date of Collection	Time of Collection	~~1240~~ JS	5/27/15	1240
Water Type (Raw, Finished, Stream, etc.)			Raw		
Temp. (°C)	Turbidity (NTU)		18 °C	0.0 NTU	
Type of Sample (circle)			Filtered/Grab		
Volume Filtered			NA		

ANALYSES REQUESTED
(circle)

Giardia/Crypto — MPA — Total Coliform/*E. coli*
HPC — R2A — Chemistries*
Other*
*Details: _____

CUSTODY TRANSFER(S)

Relinquished by: Kenneth Final Date: 5/27/15 Time: 1400
Received by: _____ Date: _____ Time: _____

Relinquished by: L Marciano Date: 5/27/15 Time: 1630
Received by: _____ Date: _____ Time: _____

Lab Receipt: Date: 5/28/15 Time: 10:03 Temp: 1.0 Condition: Intact Initials: JLh

Laboratory Name: Mohawk Valley Water Authority	Laboratory ID: NY01505

Method 1622/1623 Bench Sheet

Sample Identification Information

* Lab Sample ID: 5-27-15 ET LBG	Person Receiving Sample: JH
* PWS ID: Wild Oaks W-4	*Sample collection date and time: 5-27-15 / 1240
* Facility ID:	Turbidity (NTU): 0.56
* Sample Collection Point ID:	Temperature, date and time @ sample receipt: 5-28-15 / 1025 JH 1.0°C
* Sample type (circle one): Initial precision and recovery (IPR) Method blank (Field (monitoring) sample) Ongoing precision and recovery (OPR) Matrix spike (MS) Proficiency testing (PT)	

Sample Spiking Information (for IPR, OPR, MS, and PT samples only)

* Estimated number spiked: Crypto ___ Giardia ___	Spiking time:
* Sample volume spiked (L):	Spiking date:
Spiking suspension ID:	Spiking analyst:

Sample Filtration

Filter type (circle one): Envirochek Envirochek HV (Filta-Max) CrypTest Other (specify)	
Did filter clog? (circle one): Yes (No)	Filtration time: 11:00 Filter lot number: L1402 0426
* Number of filter(s) used?: 1	Filtration date: 5-28-15
* Volume filtered (L) to nearest 1/4L: 10.00L	Filtration analyst: B

Sample Elution (must be initiated within 96 hours of sample collection/filtration)

Elution procedure (circle one): Wrist shaker (Filta-Max wash station) Stomacher Backflush/sonication	
Type of Elution buffer: BGSV	Elution time: 11:30
Elution buffer lot number: 5-21-15	Elution date: 5-28-15
Elution buffer expiration date: 6-21-15	Elution analyst: B

Concentration, IMS, and Slide Preparation

(must be completed on same working day that samples are eluted)

Procedure (circle one): Centrifugation (Filta-Max concentrator) Other (specify)	
* Pellet volume after concentration (mL) to nearest 0.1mL: 0.1	Concentration analyst: PO
* Total volume of resuspended concentrate (mL): 10	IMS analyst: D. Wright Training
* Volume of resuspended concentrate transferred to IMS (mL): 10	Slide preparation time: 2:30 pm
Number of subsamples processed through entire method: 0	Slide preparation date: 5-28-15
IMS lot number: 1639221	Slide preparation analyst: D.W. Training
IMS system (circle one): (Dynal GC-Combo) Dynal anti-Crypto Other (specify)	
Slides (circle one): Meridian Dynal (Waterborne) Other (specify) 111	

Slide Staining (must be completed within 72 hours of application of sample to the slide)

Detection kit (circle one): (BTF EasyStain) Merifluor Crypt-a-glo Giardi-a-glo Aqua-glo Other (specify)	
Detection kit lot number: GC-3107	Staining date and time: 5-29-15 / 9:00
Number of slides for this sample: 1	Staining analyst: D. Wright Training

*** Examination Results as Total FA number from all slides for sample Cryptosporidium: Ø Giardia: Ø**

Comments:

ENVIROTEST LABORATORIES, INC.

Client 1905 PWS Id

Lims 90562 - 05272015

Sample Date/Time 05272015 1240

* = Data entered into LT2/Stage2 Data Collection and Tracking System

Laboratory name: Mohawk Valley Water Authority	Laboratory ID: NY01505

Method 1622/1623 Slide Examination Form

Sample ID: 5-27-15 ET LBG- Wild Oaks W-4	Analyst: PO
Examination/verification completion date and time: 5-29-15 3:15 (must be completed within 168 hours (7 days) of staining)	Slide number: 90562 Total number of slides for this sample: 1
Positive staining control acceptable ☒ YES ☐ NO	Negative staining control acceptable ☒ YES ☐ NO
FITC, Size, Shape, DIC and DAPI Characteristics of 3 Oocysts Recorded ☒ YES ☐ NO	

Cryptosporidium Results

Object located by FA No.	Shape (oval or round)	Size L x W (µm)	DAPI -	DAPI +		D.I.C.		
			Light blue internal staining, no distinct nuclei, green rim (A)	Intense blue internal staining (B)	Number of nuclei stained sky blue (C)	Empty oocysts (D)	Oocysts with amorphous structure (E)	Oocysts with internal structure (F) Number of sporozoites
1								
2								
3								
4								
5								
6								
7								
8								
9								
10								

Total FA number from this slide: Ø	D.I.C. - Total number of empty oocysts (D):
DAPI -: Total number (A):	D.I.C. - Total number of oocysts with amorphous structure (E):
DAPI +: Total number (B):	D.I.C. - Total number of oocysts with internal structure (F):
DAPI +: Total number (C):	Total count DAPI + (C) that show structure by D.I.C. (F):

Giardia Results

Object located by FA No.	Shape (oval or round)	Size L x W (µm)	DAPI -	DAPI +		D.I.C.				
			Light blue internal staining, no distinct nuclei, green rim (A)	Intense blue internal staining (B)	Number of nuclei stained sky blue (C)	Empty cysts (D)	Cysts with amorphous structure (E)	Cysts with internal structure (F) Number of nuclei	Median body	Axonemes
1										
2										
3										
4										
5										
6										
7										
8										
9										
10										

Total FA number from this slide: Ø	D.I.C.: Total number of empty cysts (D):
DAPI-: Total number (A):	D.I.C.: Total number of cysts with amorphous structure (E):
DAPI+: Total number (B):	D.I.C.: Total number of cysts with one internal structure (F):
DAPI+: Total number (C):	D.I.C.: Total number of cysts with >one internal structure (F):
	Total number DAPI + (C) that show structure by D.I.C. (F):

MVWA WATER QUALITY LABORATORY

One Kennedy Plaza
Utica, NY 13502

Phone: (315) 792-0338
Fax: (315) 792-5201

MOHAWK VALLEY WATER AUTHORITY

Report of Examination
Microscopic Examination for Microorganisms (MPA)

Sample : Envirotest Wild Oakes Water System Well #4 LIMS # 90562
Sample Date: 5-27-15
Date completed: 5-29.15

Sample was analyzed using modified MPA and examined using phase contrast and epifluorescence microscopy.

10000.0 ml of the sample was examined.

Organisms seen:

Kingdom Plantae:

Pollen

A sample blank was prepared using distilled water and no organisms were observed in the blank.

A positive control culture of *Selenestrum sp* exhibited characteristics of chlorophyll fluorescence.

MVWA WATER QUALITY LABORATORY

One Kennedy Plaza
Utica, NY 13502

Phone: (315) 792-0338
Fax: (315) 792-5201

MOHAWK VALLEY WATER AUTHORITY

MPA Worksheet

Client Envirotest Wild Oaks Water Sys Well 4

Lims# 90562

Date Sampled 5/27/15

Date Completed 5/29/15

Results:

pollen

no algae seen w/F

F-2

EnviroTest Laboratories, Inc.
315 Fullerton Avenue
Newburgh NY 12550
Phone (845) 562-0890 Fax (845) 562-0841

Chain of Custody Record

Envirotest Laboratories Inc.

Client Information (Sub Contract Lab)	Sampler:	Lab PM: Bayer, Debra	Carrier Tracking No(s):	COC No: 420-7610 1
Client Contact: Shipping/Receiving	Phone:	E-Mail: dbayer@envirotestlaboratories.com		Page: Page 1 of 1
Company: Mohawk Valley Water Authority				SDG Job #: 420-90724-1
Address: Water Quality Dept. One Kennedy Plaza 3rd Floor Lab.	Due Date Requested: 6/8/2015			
City: Utica	TAT Requested (days):			
State, Zip: NY, 13502				
Phone:	PO #:			
Email:	WO #:			
Project Name: LBG Inc	Project #: 42001269			
Site:	SSOW#:			

Analysis Requested

Preservation Codes:
A - HCL, B - NaOH, C - Zn Acetate, D - Nitric Acid, E - NaHSO4, F - MeOH, G - Amchlor, H - Ascorbic Acid, I - Ice, J - DI Water, K - EDTA, L - EDA, M - Hexane, N - None, O - AsNaO2, P - Na2O4S, Q - Na2SO3, R - Na2S2SO3, S - H2SO4, T - TSP Dodecahydrate, U - Acetone, V - MCAA, W - pH 4-5, Z - other (specify)
Other:

Sample Identification Client ID (Lab ID)	Sample Date	Sample Time	Sample Type (C=comp, G=grab)	Matrix (W=water, S=solid, O=waste/oil, BT=Tissue, A=Air)	Field Filtered Sample (Yes or No)	Perform MS/MSD (Yes or No)	SUBCONTRACT/ MPA/Crypto/Giardia	Total Number of containers	Special Instructions/Note:
			Preservation Code						
Well 4 - 5/27 (420-90724-1)	5/27/15	12:40		Water			X	2	LIMS #90562

Possible Hazard Identification
☐ Non-Hazard ☐ Flammable ☐ Skin Irritant ☐ Poison B ☐ Unknown ☐ Radiological

Sample Disposal (A fee may be assessed if samples are retained longer than 1 month)
☐ Return To Client ☐ Disposal By Lab ☐ Archive For _____ Months

Deliverable Requested: I, II, III, IV, Other (specify)

Special Instructions/QC Requirements

Empty Kit Relinquished by	Date	Time	Method of Shipment

Relinquished by	Date/Time	Company	Received by	Date/Time	Company
J Marciano	5/27/15 1630	ETL	[illegible]	5/28/15 10:05	MVWA

Custody Seals Intact: ☐ Yes ☐ No	Custody Seal No.	Cooler Temperature(s) °C and Other Remarks

Page 8 of 8

Pace Analytical Services, Inc.
8 East Tower Circle
Ormond Beach, FL 32174
(386)672-5668

June 09, 2015

Ron Bayer
EnviroTest Laboratories Inc.
315 Fullerton Avenue
Newburgh, NY 12550

RE: Project: LBG Inc
Pace Project No.: 35190843

Dear Ron Bayer:
Enclosed are the analytical results for sample(s) received by the laboratory on June 02, 2015. The results relate only to the samples included in this report. Results reported herein conform to the most current TNI standards and the laboratory's Quality Assurance Manual, where applicable, unless otherwise noted in the body of the report.

If you have any questions concerning this report, please feel free to contact me.

Sincerely,

Bo Garcia
bo.garcia@pacelabs.com
Project Manager

Enclosures

cc: Debra Bayer, EnviroTest Laboratories Inc.
Renee Cusack, EnviroTest Laboratories Inc.
Joyce Esposito, EnviroTest Laboratories Inc.
Janine Rader, EnviroTest Laboratories Inc.
Meredith Ruthven, EnviroTest Laboratories Inc.

REPORT OF LABORATORY ANALYSIS

This report shall not be reproduced, except in full,
without the written consent of Pace Analytical Services, Inc..

Pace Analytical Services, Inc.
8 East Tower Circle
Ormond Beach, FL 32174
(386)672-5668

CERTIFICATIONS

Project: LBG Inc
Pace Project No.: 35190843

Pennsylvania Certification IDs
1638 Roseytown Rd Suites 2,3&4, Greensburg, PA 15601
ACLASS DOD-ELAP Accreditation #: ADE-1544
Alabama Certification #: 41590
Arizona Certification #: AZ0734
Arkansas Certification
California/TNI Certification #: 04222CA
Colorado Certification
Connecticut Certification #: PH-0694
Delaware Certification
Florida/TNI Certification #: E87683
Guam/PADEP Certification
Hawaii/PADEP Certification
Idaho Certification
Illinois/PADEP Certification
Indiana/PADEP Certification
Iowa Certification #: 391
Kansas/TNI Certification #: E-10358
Kentucky Certification #: 90133
Louisiana DHH/TNI Certification #: LA140008
Louisiana DEQ/TNI Certification #: 4086
Maine Certification #: PA00091
Maryland Certification #: 308
Massachusetts Certification #: M-PA1457
Michigan/PADEP Certification
Missouri Certification #: 235
Montana Certification #: Cert 0082
Nebraska Certification #: NE-05-29-14
Nevada Certification
New Hampshire/TNI Certification #: 2976
New Jersey/TNI Certification #: PA 051
New Mexico Certification
New York/TNI Certification #: 10888
North Carolina Certification #: 42706
North Dakota Certification #: R-190
Oregon/TNI Certification #: PA200002
Pennsylvania/TNI Certification #: 65-00282
Puerto Rico Certification #: PA01457
South Dakota Certification
Tennessee Certification #: TN2867
Texas/TNI Certification #: T104704188
Utah/TNI Certification #: PA014572014-4
Vermont Dept. of Health: ID# VT-0282
Virgin Island/PADEP Certification
Virginia/VELAP Certification #: 460198
Washington Certification #: C868
West Virginia DEP Certification #: 143
West Virginia DHHR Certification #: 9964C
Wisconsin/PADEP Certification
Wyoming Certification #: 8TMS-Q

Ormond Beach Certification IDs
8 East Tower Circle, Ormond Beach, FL 32174
Alabama Certification #: 41320
Connecticut Certification #: PH-0216
Delaware Certification: FL NELAC Reciprocity
Florida Certification #: E83079
Georgia Certification #: 955
Guam Certification: FL NELAC Reciprocity
Hawaii Certification: FL NELAC Reciprocity
Illinois Certification #: 200068
Indiana Certification: FL NELAC Reciprocity
Kansas Certification #: E-10383
Kentucky Certification #: 90050
Louisiana Certification #: FL NELAC Reciprocity
Louisiana Environmental Certificate #: 05007
Maryland Certification: #346
Massachusetts Certification #: M-FL1264
Michigan Certification #: 9911
Mississippi Certification: FL NELAC Reciprocity
Missouri Certification #: 236
Montana Certification #: Cert 0074
Nebraska Certification: NE-OS-28-14
Nevada Certification: FL NELAC Reciprocity
New Hampshire Certification #: 2958
New Jersey Certification #: FL765
New York Certification #: 11608
North Carolina Environmental Certificate #: 667
Pennsylvania Certification #: 68-00547
Puerto Rico Certification #: FL01264
South Carolina Certification: #96042001
Tennessee Certification #: TN02974
Texas Certification: FL NELAC Reciprocity
US Virgin Islands Certification: FL NELAC Reciprocity
Virginia Environmental Certification #: 460165
Washington Certification #: C955
West Virginia Certification #: 9962C
Wisconsin Certification #: 399079670
Wyoming (EPA Region 8): FL NELAC Reciprocity

This report shall not be reproduced, except in full,
without the written consent of Pace Analytical Services, Inc..

Pace Analytical Services, Inc.
8 East Tower Circle
Ormond Beach, FL 32174
(386)672-5668

SAMPLE SUMMARY

Project: LBG Inc
Pace Project No.: 35190843

Lab ID	Sample ID	Matrix	Date Collected	Date Received
35190843001	**Well 4 5/29 (420-90837-1)**	Drinking Water	05/29/15 11:10	06/02/15 11:05

This report shall not be reproduced, except in full,
without the written consent of Pace Analytical Services, Inc..

Pace Analytical Services, Inc.
8 East Tower Circle
Ormond Beach, FL 32174
(386)672-5668

SAMPLE ANALYTE COUNT

Project: LBG Inc
Pace Project No.: 35190843

Lab ID	Sample ID	Method	Analysts	Analytes Reported	Laboratory
35190843001	**Well 4 5/29 (420-90837-1)**	EPA 504.1	AYF	2	PASI-O
		EPA 508.1	JTJ	25	PASI-O
		EPA 515.3	LJM	8	PASI-O
		EPA 531.1	WFH	9	PASI-O
		EPA 525.2	TWB	8	PASI-O
		SM 7500Rn-B	FCC	1	PASI-PA
		EPA 900.0	FCC	2	PASI-PA
		EPA 903.1	JC2	1	PASI-PA
		EPA 904.0	JLW	1	PASI-PA
		EPA 908.0	JAL	1	PASI-PA

This report shall not be reproduced, except in full,
without the written consent of Pace Analytical Services, Inc..

Pace Analytical Services, Inc.
8 East Tower Circle
Ormond Beach, FL 32174
(386)672-5668

ANALYTICAL RESULTS

Project: LBG Inc
Pace Project No.: 35190843

Sample: Well 4 5/29 (420-90837-1) **Lab ID: 35190843001** Collected: 05/29/15 11:10 Received: 06/02/15 11:05 Matrix: Drinking Water

Parameters	Results	Units	PQL	MDL	DF	Prepared	Analyzed	CAS No.	Qual
504.1 GCS EDB and DBCP	Analytical Method: EPA 504.1 Preparation Method: EPA 504.1								
1,2-Dibromo-3-chloropropane	**<0.0051**	ug/L	0.021	0.0051	1	06/03/15 18:10	06/04/15 03:03	96-12-8	
1,2-Dibromoethane (EDB)	**<0.0065**	ug/L	0.010	0.0065	1	06/03/15 18:10	06/04/15 03:03	106-93-4	
508.1 GCS Pesticides	Analytical Method: EPA 508.1 Preparation Method: EPA 508.1								
Alachlor	**<0.032**	ug/L	0.19	0.032	1	06/04/15 12:00	06/05/15 09:08	15972-60-8	
Atrazine	**<0.020**	ug/L	0.095	0.020	1	06/04/15 12:00	06/05/15 09:08	1912-24-9	
gamma-BHC (Lindane)	**<0.0028**	ug/L	0.019	0.0028	1	06/04/15 12:00	06/05/15 09:08	58-89-9	
Butachlor	**<0.014**	ug/L	0.095	0.014	1	06/04/15 12:00	06/05/15 09:08	23184-66-9	
Chlordane (Technical)	**<0.044**	ug/L	0.19	0.044	1	06/04/15 12:00	06/05/15 09:08	57-74-9	
Dieldrin	**<0.013**	ug/L	0.095	0.013	1	06/04/15 12:00	06/05/15 09:08	60-57-1	
Endrin	**<0.0019**	ug/L	0.0095	0.0019	1	06/04/15 12:00	06/05/15 09:08	72-20-8	
Heptachlor	**<0.0057**	ug/L	0.038	0.0057	1	06/04/15 12:00	06/05/15 09:08	76-44-8	
Heptachlor epoxide	**<0.0028**	ug/L	0.019	0.0028	1	06/04/15 12:00	06/05/15 09:08	1024-57-3	
Hexachlorobenzene	**<0.010**	ug/L	0.095	0.010	1	06/04/15 12:00	06/05/15 09:08	118-74-1	
Hexachlorocyclopentadiene	**<0.030**	ug/L	0.095	0.030	1	06/04/15 12:00	06/05/15 09:08	77-47-4	L3
Methoxychlor	**<0.013**	ug/L	0.095	0.013	1	06/04/15 12:00	06/05/15 09:08	72-43-5	
Metolachlor	**<0.010**	ug/L	0.095	0.010	1	06/04/15 12:00	06/05/15 09:08	51218-45-2	
PCB-1016 (Aroclor 1016)	**<0.076**	ug/L	0.095	0.076	1	06/04/15 12:00	06/05/15 09:08	12674-11-2	
PCB-1221 (Aroclor 1221)	**<0.027**	ug/L	0.095	0.027	1	06/04/15 12:00	06/05/15 09:08	11104-28-2	
PCB-1232 (Aroclor 1232)	**<0.027**	ug/L	0.095	0.027	1	06/04/15 12:00	06/05/15 09:08	11141-16-5	
PCB-1242 (Aroclor 1242)	**<0.048**	ug/L	0.095	0.048	1	06/04/15 12:00	06/05/15 09:08	53469-21-9	
PCB-1248 (Aroclor 1248)	**<0.059**	ug/L	0.095	0.059	1	06/04/15 12:00	06/05/15 09:08	12672-29-6	
PCB-1254 (Aroclor 1254)	**<0.022**	ug/L	0.095	0.022	1	06/04/15 12:00	06/05/15 09:08	11097-69-1	
PCB-1260 (Aroclor 1260)	**<0.062**	ug/L	0.095	0.062	1	06/04/15 12:00	06/05/15 09:08	11096-82-5	
PCB, Total	**<0.076**	ug/L	0.095	0.076	1	06/04/15 12:00	06/05/15 09:08	1336-36-3	
Propachlor	**<0.0095**	ug/L	0.095	0.0095	1	06/04/15 12:00	06/05/15 09:08	1918-16-7	
Simazine	**<0.042**	ug/L	0.066	0.042	1	06/04/15 12:00	06/05/15 09:08	122-34-9	
Toxaphene	**<0.57**	ug/L	0.95	0.57	1	06/04/15 12:00	06/05/15 09:08	8001-35-2	
Surrogates									
Decachlorobiphenyl (S)	127	%	70-130		1	06/04/15 12:00	06/05/15 09:08	2051-24-3	
515.3 Chlorinated Herbicides	Analytical Method: EPA 515.3 Preparation Method: EPA 515.3								
2,4-D	**<0.081**	ug/L	0.10	0.081	1	06/03/15 08:50	06/04/15 01:57	94-75-7	
Dalapon	**<0.89**	ug/L	1.0	0.89	1	06/03/15 08:50	06/04/15 01:57	75-99-0	
Dicamba	**<0.067**	ug/L	0.10	0.067	1	06/03/15 08:50	06/04/15 01:57	1918-00-9	
Dinoseb	**<0.16**	ug/L	0.20	0.16	1	06/03/15 08:50	06/04/15 01:57	88-85-7	
Pentachlorophenol	**<0.030**	ug/L	0.040	0.030	1	06/03/15 08:50	06/04/15 01:57	87-86-5	
Picloram	**<0.094**	ug/L	0.10	0.094	1	06/03/15 08:50	06/04/15 01:57	1918-02-1	
2,4,5-TP (Silvex)	**<0.16**	ug/L	0.20	0.16	1	06/03/15 08:50	06/04/15 01:57	93-72-1	
Surrogates									
2,4-DCAA (S)	85	%	70-130		1	06/03/15 08:50	06/04/15 01:57	19719-28-9	
531.1 HPLC Carbamates	Analytical Method: EPA 531.1								
Aldicarb	**<0.70**	ug/L	2.0	0.70	1		06/05/15 16:44	116-06-3	
Aldicarb sulfone	**<0.60**	ug/L	2.0	0.60	1		06/05/15 16:44	1646-88-4	
Aldicarb sulfoxide	**<0.67**	ug/L	2.0	0.67	1		06/05/15 16:44	1646-87-3	

This report shall not be reproduced, except in full,
without the written consent of Pace Analytical Services, Inc..

Pace Analytical Services, Inc.
8 East Tower Circle
Ormond Beach, FL 32174
(386)672-5668

ANALYTICAL RESULTS

Project: LBG Inc
Pace Project No.: 35190843

Sample: Well 4 5/29 (420-90837-1) **Lab ID: 35190843001** Collected: 05/29/15 11:10 Received: 06/02/15 11:05 Matrix: Drinking Water

Parameters	Results	Units	PQL	MDL	DF	Prepared	Analyzed	CAS No.	Qual
531.1 HPLC Carbamates	Analytical Method: EPA 531.1								
Carbofuran	**<0.75**	ug/L	2.0	0.75	1		06/05/15 16:44	1563-66-2	
3-Hydroxycarbofuran	**<0.51**	ug/L	2.0	0.51	1		06/05/15 16:44	16655-82-6	
Methomyl	**<0.57**	ug/L	2.0	0.57	1		06/05/15 16:44	16752-77-5	
Oxamyl	**<0.47**	ug/L	2.0	0.47	1		06/05/15 16:44	23135-22-0	
Carbaryl	**<0.28**	ug/L	2.0	0.28	1		06/05/15 16:44	63-25-2	
Surrogates									
Propoxur (S)	104	%	80-120		1		06/05/15 16:44	114-26-1	P4
525.2 Base Neutral Extractable	Analytical Method: EPA 525.2 Preparation Method: EPA 525.2								
Aldrin	**<0.034**	ug/L	0.095	0.034	1	06/04/15 12:00	06/04/15 23:01	309-00-2	
Benzo(a)pyrene	**<0.018**	ug/L	0.095	0.018	1	06/04/15 12:00	06/04/15 23:01	50-32-8	
bis(2-Ethylhexyl)adipate	**<0.36**	ug/L	1.5	0.36	1	06/04/15 12:00	06/04/15 23:01	103-23-1	
bis(2-Ethylhexyl)phthalate	**<0.47**	ug/L	1.9	0.47	1	06/04/15 12:00	06/04/15 23:01	117-81-7	
Metribuzin	**<0.029**	ug/L	0.28	0.029	1	06/04/15 12:00	06/04/15 23:01	21087-64-9	
Surrogates									
1,3-Dimethyl-2-nitrobenzene(S)	110	%	70-130		1	06/04/15 12:00	06/04/15 23:01	81209	
Perylene-d12 (S)	80	%	70-130		1	06/04/15 12:00	06/04/15 23:01	1520963	
Triphenylphosphate (S)	103	%	70-130		1	06/04/15 12:00	06/04/15 23:01	115-86-6	

This report shall not be reproduced, except in full,
without the written consent of Pace Analytical Services, Inc..

Pace Analytical Services, Inc.
8 East Tower Circle
Ormond Beach, FL 32174
(386)672-5668

QUALITY CONTROL DATA

Project: LBG Inc
Pace Project No.: 35190843

QC Batch: GCSV/14781 | Analysis Method: EPA 531.1
QC Batch Method: EPA 531.1 | Analysis Description: 531.1 HPLC Carbamate
Associated Lab Samples: 35190843001

METHOD BLANK: 1231925 | Matrix: Water
Associated Lab Samples: 35190843001

Parameter	Units	Blank Result	Reporting Limit	Analyzed	Qualifiers
3-Hydroxycarbofuran	ug/L	<0.51	2.0	06/05/15 10:37	
Aldicarb	ug/L	<0.70	2.0	06/05/15 10:37	
Aldicarb sulfone	ug/L	<0.60	2.0	06/05/15 10:37	
Aldicarb sulfoxide	ug/L	<0.67	2.0	06/05/15 10:37	
Carbaryl	ug/L	<0.28	2.0	06/05/15 10:37	
Carbofuran	ug/L	<0.75	2.0	06/05/15 10:37	
Methomyl	ug/L	<0.57	2.0	06/05/15 10:37	
Oxamyl	ug/L	<0.47	2.0	06/05/15 10:37	
Propoxur (S)	%	106	80-120	06/05/15 10:37	

LABORATORY CONTROL SAMPLE: 1231926

Parameter	Units	Spike Conc.	LCS Result	LCS % Rec	% Rec Limits	Qualifiers
3-Hydroxycarbofuran	ug/L	10	10.1	101	80-120	
Aldicarb	ug/L	10	10.0	100	80-120	
Aldicarb sulfone	ug/L	10	9.8	98	80-120	
Aldicarb sulfoxide	ug/L	10	11.8	118	80-120	
Carbaryl	ug/L	10	10.3	103	80-120	
Carbofuran	ug/L	10	10.7	107	80-120	
Methomyl	ug/L	10	9.9	99	80-120	
Oxamyl	ug/L	10	9.1	91	80-120	
Propoxur (S)	%			101	80-120	

MATRIX SPIKE & MATRIX SPIKE DUPLICATE: 1231927 1231928

Parameter	Units	35190710006 Result	MS Spike Conc.	MSD Spike Conc.	MS Result	MSD Result	MS % Rec	MSD % Rec	% Rec Limits	RPD	Max RPD	Qual
3-Hydroxycarbofuran	ug/L	0.51U	10	10	10.2	11.2	102	112	80-120	9	20	
Aldicarb	ug/L	0.70U	10	10	10.2	10.7	102	107	80-120	4	20	
Aldicarb sulfone	ug/L	0.60U	10	10	9.8	11.2	98	112	80-120	14	20	
Aldicarb sulfoxide	ug/L	0.67U	10	10	9.9	12.1	99	121	80-120	20	20	M1
Carbaryl	ug/L	0.28U	10	10	10.7	12.5	107	125	80-120	15	20	M1
Carbofuran	ug/L	0.75U	10	10	11.4	12.3	114	123	80-120	8	20	M1
Methomyl	ug/L	0.57U	10	10	10.4	11.6	104	116	80-120	11	20	
Oxamyl	ug/L	0.47U	10	10	9.0	10.3	90	103	80-120	14	20	
Propoxur (S)	%						104	112	80-120			

Results presented on this page are in the units indicated by the "Units" column except where an alternate unit is presented to the right of the result.

REPORT OF LABORATORY ANALYSIS

This report shall not be reproduced, except in full,
without the written consent of Pace Analytical Services, Inc..

Pace Analytical Services, Inc.
8 East Tower Circle
Ormond Beach, FL 32174
(386)672-5668

QUALITY CONTROL DATA

Project: LBG Inc
Pace Project No.: 35190843

QC Batch: OEXT/22680 | Analysis Method: EPA 504.1
QC Batch Method: EPA 504.1 | Analysis Description: 504 EDB DBCP
Associated Lab Samples: 35190843001

METHOD BLANK: 1230701 | Matrix: Water
Associated Lab Samples: 35190843001

Parameter	Units	Blank Result	Reporting Limit	Analyzed	Qualifiers
1,2-Dibromo-3-chloropropane	ug/L	<0.0049	0.020	06/04/15 01:02	
1,2-Dibromoethane (EDB)	ug/L	<0.0062	0.010	06/04/15 01:02	

LABORATORY CONTROL SAMPLE & LCSD: 1230702 1231131

Parameter	Units	Spike Conc.	LCS Result	LCSD Result	LCS % Rec	LCSD % Rec	% Rec Limits	RPD	Max RPD	Qualifiers
1,2-Dibromo-3-chloropropane	ug/L	.25	0.23	0.22	94	87	70-130	7	40	
1,2-Dibromoethane (EDB)	ug/L	.25	0.22	0.20	88	82	70-130	8	40	

MATRIX SPIKE & MATRIX SPIKE DUPLICATE: 1231132 1231133

Parameter	Units	35190496001 Result	MS Spike Conc.	MSD Spike Conc.	MS Result	MSD Result	MS % Rec	MSD % Rec	% Rec Limits	RPD	Max RPD	Qual
1,2-Dibromo-3-chloropropane	ug/L	<0.0050	.44	.44	0.56	0.57	127	130	65-135	2	40	
1,2-Dibromoethane (EDB)	ug/L	<0.0064	.44	.44	0.51	0.52	116	119	65-135	2	40	

Results presented on this page are in the units indicated by the "Units" column except where an alternate unit is presented to the right of the result.

REPORT OF LABORATORY ANALYSIS

This report shall not be reproduced, except in full,
without the written consent of Pace Analytical Services, Inc..

Pace Analytical Services, Inc.
8 East Tower Circle
Ormond Beach, FL 32174
(386)672-5668

QUALITY CONTROL DATA

Project: LBG Inc
Pace Project No.: 35190843

QC Batch: OEXT/22691 | Analysis Method: EPA 508.1
QC Batch Method: EPA 508.1 | Analysis Description: 508 GCS Pesticide
Associated Lab Samples: 35190843001

METHOD BLANK: 1231092 | Matrix: Water
Associated Lab Samples: 35190843001

Parameter	Units	Blank Result	Reporting Limit	Analyzed	Qualifiers
Alachlor	ug/L	<0.034	0.20	06/05/15 04:11	
Atrazine	ug/L	<0.021	0.10	06/05/15 04:11	
Butachlor	ug/L	<0.015	0.10	06/05/15 04:11	
Chlordane (Technical)	ug/L	<0.047	0.20	06/05/15 04:11	
Dieldrin	ug/L	<0.014	0.10	06/05/15 04:11	
Endrin	ug/L	<0.0020	0.010	06/05/15 04:11	
gamma-BHC (Lindane)	ug/L	<0.0030	0.020	06/05/15 04:11	
Heptachlor	ug/L	<0.0060	0.040	06/05/15 04:11	
Heptachlor epoxide	ug/L	<0.0030	0.020	06/05/15 04:11	
Hexachlorobenzene	ug/L	<0.011	0.10	06/05/15 04:11	
Hexachlorocyclopentadiene	ug/L	<0.032	0.10	06/05/15 04:11	
Methoxychlor	ug/L	<0.014	0.10	06/05/15 04:11	
Metolachlor	ug/L	<0.011	0.10	06/05/15 04:11	
PCB, Total	ug/L	<0.080	0.10	06/05/15 04:11	
PCB-1016 (Aroclor 1016)	ug/L	<0.080	0.10	06/05/15 04:11	
PCB-1221 (Aroclor 1221)	ug/L	<0.029	0.10	06/05/15 04:11	
PCB-1232 (Aroclor 1232)	ug/L	<0.029	0.10	06/05/15 04:11	
PCB-1242 (Aroclor 1242)	ug/L	<0.051	0.10	06/05/15 04:11	
PCB-1248 (Aroclor 1248)	ug/L	<0.062	0.10	06/05/15 04:11	
PCB-1254 (Aroclor 1254)	ug/L	<0.023	0.10	06/05/15 04:11	
PCB-1260 (Aroclor 1260)	ug/L	<0.066	0.10	06/05/15 04:11	
Propachlor	ug/L	<0.010	0.10	06/05/15 04:11	
Simazine	ug/L	<0.044	0.070	06/05/15 04:11	
Toxaphene	ug/L	<0.61	1.0	06/05/15 04:11	
Decachlorobiphenyl (S)	%	133	70-130	06/05/15 04:11	S3

LABORATORY CONTROL SAMPLE: 1231093

Parameter	Units	Spike Conc.	LCS Result	LCS % Rec	% Rec Limits	Qualifiers
Alachlor	ug/L	1	1.2	118	70-130	
Atrazine	ug/L	1.2	1.3	105	70-130	
Butachlor	ug/L	.5	0.57	114	70-130	
Dieldrin	ug/L	.5	0.59	118	70-130	
Endrin	ug/L	.05	0.059	119	70-130	
gamma-BHC (Lindane)	ug/L	.1	0.11	113	70-130	
Heptachlor	ug/L	.2	0.21	105	70-130	
Heptachlor epoxide	ug/L	.1	0.13	130	70-130	
Hexachlorobenzene	ug/L	.5	0.50	100	70-130	
Hexachlorocyclopentadiene	ug/L	.5	0.68	137	70-130	L0
Methoxychlor	ug/L	.5	0.57	114	70-130	

Results presented on this page are in the units indicated by the "Units" column except where an alternate unit is presented to the right of the result.

REPORT OF LABORATORY ANALYSIS

This report shall not be reproduced, except in full,
without the written consent of Pace Analytical Services, Inc..

Pace Analytical Services, Inc.
8 East Tower Circle
Ormond Beach, FL 32174
(386)672-5668

QUALITY CONTROL DATA

Project: LBG Inc
Pace Project No.: 35190843

LABORATORY CONTROL SAMPLE: 1231093

Parameter	Units	Spike Conc.	LCS Result	LCS % Rec	% Rec Limits	Qualifiers
Metolachlor	ug/L	.5	0.59	118	70-130	
Propachlor	ug/L	.5	0.56	112	70-130	
Simazine	ug/L	.88	0.82	93	70-130	
Decachlorobiphenyl (S)	%			130	70-130	

MATRIX SPIKE & MATRIX SPIKE DUPLICATE: 1231805 1231806

Parameter	Units	35190843001 Result	MS Spike Conc.	MSD Spike Conc.	MS Result	MSD Result	MS % Rec	MSD % Rec	% Rec Limits	RPD	Max RPD	Qual
Alachlor	ug/L	<0.032	2	2	2.4	2.3	121	117	65-135	3	40	
Atrazine	ug/L	<0.020	2.5	2.5	2.7	2.6	109	103	65-135	5	40	
Butachlor	ug/L	<0.014	1	1	1.2	1.1	119	111	65-135	6	40	
Dieldrin	ug/L	<0.013	1	1	1.2	1.2	118	116	65-135	3	40	
Endrin	ug/L	<0.0019	.1	.1	0.11	0.11	115	111	65-135	3	40	
gamma-BHC (Lindane)	ug/L	<0.0028	.2	.2	0.22	0.22	112	110	65-135	1	40	
Heptachlor	ug/L	<0.0057	.4	.4	0.40	0.39	100	98	65-135	2	40	
Heptachlor epoxide	ug/L	<0.0028	.2	.2	0.26	0.25	128	126	65-135	2	40	
Hexachlorobenzene	ug/L	<0.010	1	1	0.96	0.92	96	92	65-135	5	40	
Hexachlorocyclopentadiene	ug/L	<0.030	1	1	1.2	1.1	116	108	65-135	8	40	
Methoxychlor	ug/L	<0.013	1	1	1.1	1.1	112	107	65-135	4	40	
Metolachlor	ug/L	<0.010	1	1	1.1	1.1	113	106	65-135	6	40	
Propachlor	ug/L	<0.0095	1	1	1.1	1.1	111	108	65-135	3	40	
Simazine	ug/L	<0.042	1.8	1.8	1.6	1.7	94	99	65-135	5	40	
Decachlorobiphenyl (S)	%						133	125	70-130		40	S0

Results presented on this page are in the units indicated by the "Units" column except where an alternate unit is presented to the right of the result.

This report shall not be reproduced, except in full,
without the written consent of Pace Analytical Services, Inc..

Pace Analytical Services, Inc.
8 East Tower Circle
Ormond Beach, FL 32174
(386)672-5668

QUALITY CONTROL DATA

Project: LBG Inc
Pace Project No.: 35190843

QC Batch: OEXT/22664
QC Batch Method: EPA 515.3
Analysis Method: EPA 515.3
Analysis Description: 5153 GCS Herbicides
Associated Lab Samples: 35190843001

METHOD BLANK: 1229221
Matrix: Water
Associated Lab Samples: 35190843001

Parameter	Units	Blank Result	Reporting Limit	Analyzed	Qualifiers
2,4,5-TP (Silvex)	ug/L	<0.16	0.20	06/02/15 23:36	
2,4-D	ug/L	<0.081	0.10	06/02/15 23:36	
Dalapon	ug/L	<0.89	1.0	06/02/15 23:36	
Dicamba	ug/L	<0.067	0.10	06/02/15 23:36	
Dinoseb	ug/L	<0.16	0.20	06/02/15 23:36	
Pentachlorophenol	ug/L	<0.030	0.040	06/02/15 23:36	
Picloram	ug/L	<0.094	0.10	06/02/15 23:36	
2,4-DCAA (S)	%	86	70-130	06/02/15 23:36	

LABORATORY CONTROL SAMPLE: 1229222

Parameter	Units	Spike Conc.	LCS Result	LCS % Rec	% Rec Limits	Qualifiers
2,4,5-TP (Silvex)	ug/L	1	0.96	96	70-130	
2,4-D	ug/L	.5	0.58	115	70-130	
Dalapon	ug/L	5	4.0	80	70-130	
Dicamba	ug/L	.5	0.46	92	70-130	
Dinoseb	ug/L	1	0.90	90	70-130	
Pentachlorophenol	ug/L	.2	0.18	88	70-130	
Picloram	ug/L	.5	0.45	91	70-130	
2,4-DCAA (S)	%			85	70-130	

MATRIX SPIKE & MATRIX SPIKE DUPLICATE: 1229473 1229474

Parameter	Units	92251692001 Result	MS Spike Conc.	MSD Spike Conc.	MS Result	MSD Result	MS % Rec	MSD % Rec	% Rec Limits	RPD	Max RPD	Qual
2,4,5-TP (Silvex)	ug/L	ND	1	1	0.89	0.95	89	95	70-130	7	40	
2,4-D	ug/L	ND	.5	.5	0.53	0.53	106	105	70-130	1	40	
Dalapon	ug/L	ND	5	5	4.3	4.6	85	92	70-130	8	40	
Dicamba	ug/L	ND	.5	.5	0.51	0.47	102	93	70-130	8	40	
Dinoseb	ug/L	ND	1	1	0.89	0.89	89	89	70-130	0	40	
Pentachlorophenol	ug/L	ND	.2	.2	0.18	0.18	88	88	70-130	0	40	
Picloram	ug/L	ND	.5	.5	0.43	0.46	87	93	70-130	6	40	
2,4-DCAA (S)	%						81	86	70-130			

Results presented on this page are in the units indicated by the "Units" column except where an alternate unit is presented to the right of the result.

REPORT OF LABORATORY ANALYSIS

This report shall not be reproduced, except in full,
without the written consent of Pace Analytical Services, Inc..

Pace Analytical Services, Inc.
8 East Tower Circle
Ormond Beach, FL 32174
(386)672-5668

QUALITY CONTROL DATA

Project: LBG Inc
Pace Project No.: 35190843

MATRIX SPIKE & MATRIX SPIKE DUPLICATE: 1230655 1230656

Parameter	Units	35190849003 Result	MS Spike Conc.	MSD Spike Conc.	MS Result	MSD Result	MS % Rec	MSD % Rec	% Rec Limits	RPD	Max RPD	Qual
2,4,5-TP (Silvex)	ug/L	0.16U	1	1	0.97	0.95	97	95	70-130	2	40	
2,4-D	ug/L	0.081U	.5	.5	0.59	0.60	118	120	70-130	1	40	
Dalapon	ug/L	0.89U	5	5	4.3	4.2	87	85	70-130	2	40	
Dicamba	ug/L	0.067U	.5	.5	0.41	0.49	82	99	70-130	18	40	
Dinoseb	ug/L	0.16U	1	1	0.86	0.88	86	88	70-130	3	40	
Pentachlorophenol	ug/L	0.030U	.2	.2	0.17	0.16	83	81	70-130	2	40	
Picloram	ug/L	0.094U	.5	.5	0.47	0.45	94	89	70-130	5	40	
2,4-DCAA (S)	%						84	84	70-130			

Results presented on this page are in the units indicated by the "Units" column except where an alternate unit is presented to the right of the result.

This report shall not be reproduced, except in full,
without the written consent of Pace Analytical Services, Inc..

Pace Analytical Services, Inc.
8 East Tower Circle
Ormond Beach, FL 32174
(386)672-5668

QUALITY CONTROL DATA

Project: LBG Inc
Pace Project No.: 35190843

QC Batch: OEXT/22692
QC Batch Method: EPA 525.2
Analysis Method: EPA 525.2
Analysis Description: 525.2 Base Neutral Extractables
Associated Lab Samples: 35190843001

METHOD BLANK: 1231096
Matrix: Water
Associated Lab Samples: 35190843001

Parameter	Units	Blank Result	Reporting Limit	Analyzed	Qualifiers
Aldrin	ug/L	<0.036	0.10	06/04/15 15:45	
Benzo(a)pyrene	ug/L	<0.019	0.10	06/04/15 15:45	
bis(2-Ethylhexyl)adipate	ug/L	<0.38	1.6	06/04/15 15:45	
bis(2-Ethylhexyl)phthalate	ug/L	<0.50	2.0	06/04/15 15:45	
Metribuzin	ug/L	<0.031	0.30	06/04/15 15:45	
1,3-Dimethyl-2-nitrobenzene(S)	%	115	70-130	06/04/15 15:45	
Perylene-d12 (S)	%	104	70-130	06/04/15 15:45	
Triphenylphosphate (S)	%	102	70-130	06/04/15 15:45	

LABORATORY CONTROL SAMPLE: 1231097

Parameter	Units	Spike Conc.	LCS Result	LCS % Rec	% Rec Limits	Qualifiers
Aldrin	ug/L	.4	0.29	72	70-130	
Benzo(a)pyrene	ug/L	.4	0.37	93	70-130	
bis(2-Ethylhexyl)adipate	ug/L	6.4	6.3	98	70-130	
bis(2-Ethylhexyl)phthalate	ug/L	8	9.1	113	70-130	
Metribuzin	ug/L	1.2	1.1	88	70-130	
1,3-Dimethyl-2-nitrobenzene(S)	%			112	70-130	
Perylene-d12 (S)	%			101	70-130	
Triphenylphosphate (S)	%			105	70-130	

MATRIX SPIKE & MATRIX SPIKE DUPLICATE: 1231807 1231808

Parameter	Units	35190350001 Result	MS Spike Conc.	MSD Spike Conc.	MS Result	MSD Result	MS % Rec	MSD % Rec	% Rec Limits	RPD	Max RPD	Qual
Aldrin	ug/L	0.034U	.8	.8	0.78	0.73	98	91	70-130	6	40	
Benzo(a)pyrene	ug/L	0.018U	.8	.8	0.73	0.76	92	95	70-130	4	40	
bis(2-Ethylhexyl)adipate	ug/L	0.36U	12.8	12.8	12.5	10.4	97	81	70-130	18	40	
bis(2-Ethylhexyl)phthalate	ug/L	0.47U	16	16	17.3	16.3	108	102	70-130	6	40	
Metribuzin	ug/L	0.029U	2.4	2.4	2.1	2.4	88	101	70-130	13	40	
1,3-Dimethyl-2-nitrobenzene(S)	%						91	119	70-130			
Perylene-d12 (S)	%						112	111	70-130			
Triphenylphosphate (S)	%						107	90	70-130			

Results presented on this page are in the units indicated by the "Units" column except where an alternate unit is presented to the right of the result.

REPORT OF LABORATORY ANALYSIS

This report shall not be reproduced, except in full,
without the written consent of Pace Analytical Services, Inc..

Pace Analytical Services, Inc.
8 East Tower Circle
Ormond Beach, FL 32174
(386)672-5668

ANALYTICAL RESULTS - RADIOCHEMISTRY

Project: LBG Inc
Pace Project No.: 35190843

Sample: Well 4 5/29 (420-90837-1) **Lab ID: 35190843001** Collected: 05/29/15 11:10 Received: 06/02/15 11:05 Matrix: Drinking Water
PWS: Site ID: Sample Type:

Parameters	Method	Act ± Unc (MDC) Carr Trac	Units	Analyzed	CAS No.	Qual
Radon	SM 7500Rn-B	**2,469 ± 98.1 (60.1)** **C:NA T:NA**	pCi/L	06/01/15 19:53	10043-92-2	
Gross Alpha	EPA 900.0	**3.20 ± 1.79 (2.93)** **C:NA T:NA**	pCi/L	06/08/15 07:42	12587-46-1	
Gross Beta	EPA 900.0	**2.91 ± 1.02 (1.61)** **C:NA T:NA**	pCi/L	06/08/15 07:42	12587-47-2	
Radium-226	EPA 903.1	**0.845U ± 0.592 (0.845)** **C:NA T:89%**	pCi/L	06/08/15 09:35	13982-63-3	
Radium-228	EPA 904.0	**0.801 ± 0.384 (0.731)** **C:85% T:83%**	pCi/L	06/08/15 13:11	15262-20-1	
Total Uranium	EPA 908.0	**3.17 ± 0.340 (0.297)** **C:NA T:76%**	pCi/L	06/05/15 20:03	7440-61-1	

This report shall not be reproduced, except in full,
without the written consent of Pace Analytical Services, Inc..

Pace Analytical Services, Inc.
8 East Tower Circle
Ormond Beach, FL 32174
(386)672-5668

QUALITY CONTROL - RADIOCHEMISTRY

Project: LBG Inc
Pace Project No.: 35190843

QC Batch: RADC/24673 | Analysis Method: EPA 903.1
QC Batch Method: EPA 903.1 | Analysis Description: 903.1 Radium-226
Associated Lab Samples: 35190843001

METHOD BLANK: 902263 | Matrix: Water
Associated Lab Samples:

Parameter	Act ± Unc (MDC) Carr Trac	Units	Analyzed	Qualifiers
Radium-226	0.0475 ± 0.487 (0.987) C:NA T:95%	pCi/L	06/08/15 09:24	

Results presented on this page are in the units indicated by the "Units" column except where an alternate unit is presented to the right of the result.

This report shall not be reproduced, except in full,
without the written consent of Pace Analytical Services, Inc..

Pace Analytical Services, Inc.
8 East Tower Circle
Ormond Beach, FL 32174
(386)672-5668

QUALITY CONTROL - RADIOCHEMISTRY

Project: LBG Inc
Pace Project No.: 35190843

QC Batch: RADC/24676 | Analysis Method: EPA 904.0
QC Batch Method: EPA 904.0 | Analysis Description: 904.0 Radium 228
Associated Lab Samples: 35190843001

METHOD BLANK: 902266 | Matrix: Water
Associated Lab Samples:

Parameter	Act ± Unc (MDC) Carr Trac	Units	Analyzed	Qualifiers
Radium-228	0.164 ± 0.403 (0.859) C:84% T:81%	pCi/L	06/08/15 13:11	

Results presented on this page are in the units indicated by the "Units" column except where an alternate unit is presented to the right of the result.

This report shall not be reproduced, except in full,
without the written consent of Pace Analytical Services, Inc..

Pace Analytical Services, Inc.
8 East Tower Circle
Ormond Beach, FL 32174
(386)672-5668

QUALITY CONTROL - RADIOCHEMISTRY

Project: LBG Inc
Pace Project No.: 35190843

QC Batch: RADC/24637 | Analysis Method: SM 7500Rn-B
QC Batch Method: SM 7500Rn-B | Analysis Description: 7500Rn B Radon
Associated Lab Samples: 35190843001

METHOD BLANK: 900706 | Matrix: Water
Associated Lab Samples:

Parameter	Act ± Unc (MDC) Carr Trac	Units	Analyzed	Qualifiers
Radon	-2.3 ± 18.6 (32.6) C:NA T:NA	pCi/L	06/01/15 17:08	

Results presented on this page are in the units indicated by the "Units" column except where an alternate unit is presented to the right of the result.

This report shall not be reproduced, except in full,
without the written consent of Pace Analytical Services, Inc..

Pace Analytical Services, Inc.
8 East Tower Circle
Ormond Beach, FL 32174
(386)672-5668

QUALITY CONTROL - RADIOCHEMISTRY

Project: LBG Inc
Pace Project No.: 35190843

QC Batch: RADC/24688 | Analysis Method: EPA 900.0
QC Batch Method: EPA 900.0 | Analysis Description: 900.0 Gross Alpha/Beta
Associated Lab Samples: 35190843001

METHOD BLANK: 902278 | Matrix: Water
Associated Lab Samples:

Parameter	Act ± Unc (MDC) Carr Trac	Units	Analyzed	Qualifiers
Gross Alpha	-0.364 ± 0.773 (2.25) C:NA T:NA	pCi/L	06/08/15 07:41	
Gross Beta	-0.530 ± 0.609 (1.75) C:NA T:NA	pCi/L	06/08/15 07:41	

Results presented on this page are in the units indicated by the "Units" column except where an alternate unit is presented to the right of the result.

This report shall not be reproduced, except in full,
without the written consent of Pace Analytical Services, Inc..

Pace Analytical Services, Inc.
8 East Tower Circle
Ormond Beach, FL 32174
(386)672-5668

QUALITY CONTROL - RADIOCHEMISTRY

Project: LBG Inc
Pace Project No.: 35190843

QC Batch: RADC/24682 | Analysis Method: EPA 908.0
QC Batch Method: EPA 908.0 | Analysis Description: 908.0 Total Uranium
Associated Lab Samples: 35190843001

METHOD BLANK: 902272 | Matrix: Water
Associated Lab Samples:

Parameter	Act ± Unc (MDC) Carr Trac	Units	Analyzed	Qualifiers
Total Uranium	-0.0990 ± 0.163 (0.300) C:NA T:91%	pCi/L	06/05/15 17:17	

Results presented on this page are in the units indicated by the "Units" column except where an alternate unit is presented to the right of the result.

This report shall not be reproduced, except in full,
without the written consent of Pace Analytical Services, Inc..

Pace Analytical Services, Inc.
8 East Tower Circle
Ormond Beach, FL 32174
(386)672-5668

QUALIFIERS

Project: LBG Inc
Pace Project No.: 35190843

DEFINITIONS

DF - Dilution Factor, if reported, represents the factor applied to the reported data due to dilution of the sample aliquot.

ND - Not Detected at or above adjusted reporting limit.

J - Estimated concentration above the adjusted method detection limit and below the adjusted reporting limit.

MDL - Adjusted Method Detection Limit.

PQL - Practical Quantitation Limit.

RL - Reporting Limit.

S - Surrogate

1,2-Diphenylhydrazine decomposes to and cannot be separated from Azobenzene using Method 8270. The result for each analyte is a combined concentration.

Consistent with EPA guidelines, unrounded data are displayed and have been used to calculate % recovery and RPD values.

LCS(D) - Laboratory Control Sample (Duplicate)

MS(D) - Matrix Spike (Duplicate)

DUP - Sample Duplicate

RPD - Relative Percent Difference

NC - Not Calculable.

SG - Silica Gel - Clean-Up

U - Indicates the compound was analyzed for, but not detected.

N-Nitrosodiphenylamine decomposes and cannot be separated from Diphenylamine using Method 8270. The result reported for each analyte is a combined concentration.

Act - Activity

Unc - Uncertainty: SDWA = 1.96 sigma count uncertainty, all other matrices = Expanded Uncertainty (95% confidence interval). Gamma Spec = Expanded Uncertainty (95.4% Confidence Interval)

(MDC) - Minimum Detectable Concentration

Trac - Tracer Recovery (%)

Carr - Carrier Recovery (%)

Pace Analytical is TNI accredited. Contact your Pace PM for the current list of accredited analytes.

TNI - The NELAC Institute.

LABORATORIES

PASI-O	Pace Analytical Services - Ormond Beach
PASI-PA	Pace Analytical Services - Greensburg

ANALYTE QUALIFIERS

L0	Analyte recovery in the laboratory control sample (LCS) was outside QC limits.
L3	Analyte recovery in the laboratory control sample (LCS) exceeded QC limits. Analyte presence below reporting limits in associated samples. Results unaffected by high bias.
M1	Matrix spike recovery exceeded QC limits. Batch accepted based on laboratory control sample (LCS) recovery.
P4	Sample field preservation does not meet EPA or method recommendations for this analysis.
S0	Surrogate recovery outside laboratory control limits.
S3	Surrogate recovery exceeded laboratory control limits. Analyte presence below reporting limits in associated samples. Results unaffected by high bias.

This report shall not be reproduced, except in full,
without the written consent of Pace Analytical Services, Inc..

Pace Analytical Services, Inc.
8 East Tower Circle
Ormond Beach, FL 32174
(386)672-5668

QUALITY CONTROL DATA CROSS REFERENCE TABLE

Project: LBG Inc
Pace Project No.: 35190843

Lab ID	Sample ID	QC Batch Method	QC Batch	Analytical Method	Analytical Batch
35190843001	**Well 4 5/29 (420-90837-1)**	EPA 504.1	OEXT/22680	EPA 504.1	GCSV/14773
35190843001	**Well 4 5/29 (420-90837-1)**	EPA 508.1	OEXT/22691	EPA 508.1	GCSV/14787
35190843001	**Well 4 5/29 (420-90837-1)**	EPA 515.3	OEXT/22664	EPA 515.3	GCSV/14759
35190843001	**Well 4 5/29 (420-90837-1)**	EPA 531.1	GCSV/14781		
35190843001	**Well 4 5/29 (420-90837-1)**	EPA 525.2	OEXT/22692	EPA 525.2	MSSV/7901
35190843001	**Well 4 5/29 (420-90837-1)**	SM 7500Rn-B	RADC/24637		
35190843001	**Well 4 5/29 (420-90837-1)**	EPA 900.0	RADC/24688		
35190843001	**Well 4 5/29 (420-90837-1)**	EPA 903.1	RADC/24673		
35190843001	**Well 4 5/29 (420-90837-1)**	EPA 904.0	RADC/24676		
35190843001	**Well 4 5/29 (420-90837-1)**	EPA 908.0	RADC/24682		

This report shall not be reproduced, except in full,
without the written consent of Pace Analytical Services, Inc..

EnviroTest Laboratories, Inc.
315 Fullerton Avenue
Newburgh, NY 12550
Phone (845) 562-0890 Fax (845) 562-0841

WO# : 35190843

35190843

f Custody Record

EnviroTest Laboratories Inc.

Client Information (Sub Contract Lab)

Client Contact: Shipping/Receiving	Phone:	M: er, Debra	Carrier Tracking No(s):
		E-Mail: dbayer@envirotestlaboratories.com	
Company: Pace Analytical Ormond Beach			
Address: 8 East Tower Circle, ,	Due Date Requested: 6/10/2015		
City: Ormond Beach	TAT Requested (days):		
State, Zip: FL, 32174			
Phone: 111-222-3333(Tel)	PO #:		
Email:	WO #:		
Project Name: LBG, Inc.	Project #: 42001269		
Site:	SSOW#:		

COC No: 420-7614.1
Page: Page 1 of 1
STL Job #: 420-90837-1

Analysis Requested

Preservation Codes:
A - HCL, B - NaOH, C - Zn Acetate, D - Nitric Acid, E - NaHSO4, F - MeOH, G - Amchlor, H - Ascorbic Acid, I - Ice, J - DI Water, K - EDTA, L - EDA
M - Hexane, N - None, O - AsNaO2, P - Na2O4S, Q - Na2SO3, R - Na2S2SO3, S - H2SO4, T - TSP Dodecahydrate, U - Acetone, V - MCAA, W - ph 4-5, Z - other (specify)
Other:

Sample Identification Client ID (Lab ID)	Sample Date	Sample Time	Sample Type (C=comp, G=grab)	Matrix (W=water, S=solid, O=waste/oil, BT=Tissue, A=Air)	Field Filtered Sample (Yes or No)	Perform MS/MSD (Yes or No)	SUBCONTRACT/ 515 Chlorinated Acids	SUBCONTRACT/ 504 EPA 504.1 EDB/DBCP	SUBCONTRACT/ 531.1 Carbamate Pesticides In DW	SUBCONTRACT/ 525.2 Semivolatile Organics	SUBCONTRACT/ 900 GA/GB/RA 226/RA 228	SUBCONTRACT/ Total Uranium	SUBCONTRACT/ Radon	SUBCONTRACT/ 508	Total Number of containers	Special Instructions/Note:
			Preservation Code:													
Well 4 - 5/29 (420-90837-1)	5/29/15	11:10		Water			X	X	X	X	X	X	X	X	1	
							*	*	*	*				*	7	* Samples Shipped to Ormond Beach
																* Radio/Radon Shipped directly to PA

Possible Hazard Identification
☐ Non-Hazard ☐ Flammable ☐ Skin Irritant ☐ Poison B ☐ Unknown ☐ Radiological

Sample Disposal (A fee may be assessed if samples are retained longer than 1 month)
☐ Return To Client ☐ Disposal By Lab ☐ Archive For _____ Months

Deliverable Requested: I, II, III, IV, Other (specify)

Special Instructions/QC Requirements:

Empty Kit Relinquished by:	Date:	Time:	Method of Shipment:		
Relinquished by: Marciano	Date/Time: 6/1/15 1630	Company: ET	Received by: T-211	Date/Time: 6-2-15 1105	Company: PCOC
Relinquished by:	Date/Time:	Company	Received by:	Date/Time:	Company
Relinquished by:	Date/Time:	Company	Received by:	Date/Time:	Company
Custody Seals Intact: Δ Yes Δ No	Custody Seal No.:		Cooler Temperature(s) °C and Other Remarks:		

Pace Analytical Florida Laboratory	Document Name: Sample Condition Upon Receipt Form	Document Revised: August 11, 2014
	Document No.: F-FL-C-007 rev. 06	Issuing Authority: Pace Florida Quality Office

Sample Condition Upon Receipt Form (SCUR)

Table Number: _____

Client Name: Enviro **Project #** 351 90843

Courier: ☑ Fed Ex ☐ UPS ☐ USPS ☐ Client ☐ Commercial ☐ Pace ☐ Other _____

Tracking # 7737 2719 6558 / 2323 0850 / 6299 / 6926

Custody Seal on Cooler/Box Present: ☐ yes ☑ no **Seals intact:** ☐ yes ☐ no

Date and Initials of person examining contents: 6-25 SD 1105

Packing Material: ☑ Bubble Wrap ☑ Bubble Bags ☐ None ☐ Other _____

Thermometer Used T-211 **Type of Ice:** (Wet) Blue None

Cooler Temperature°C 3.8 (Visual) 0.0 (Correction Factor) 3.8 (Actual)

4.8 1.7 5.7 4.8 1.7 5.7

(Temp should be above freezing to 6°C). If below 0°C, then was sample frozen? ☐Yes ☐No

Receipt of samples satisfactory: ☐Yes ☐No **Rush TAT requested on COC:**

If yes, then all conditions below were met:	If no, then mark box & describe issue (use comments area if necessary):
Chain of Custody Present	☐
Chain of Custody Filled Out	☐
Relinquished Signature & Sampler Name COC	☐
Samples Arrived within Hold Time	☐
Sufficient Volume	☐
Correct Containers Used	☐
Containers Intact	☐ radons were logged in as 504
Sample Labels match COC (sample IDs & date/time of collection)	☐ No Labels: ☐ No Time/Date on Labels: ☐
All containers needing preservation are found to be in compliance with EPA recommendation.	☐
No Headspace in VOA Vials (>6mm):	☐

Client Notification/ Resolution:

Person Contacted: _____ Date/Time: _____

Comments/ Resolution (use back for additional comments): _____

Project Manager Review: _____ **Date:** _____

Finished Product Information Only

F.P. Sample ID: _____

Production Code: _____

Date/Time Opened: _____

Number of Unopened Bottles Remaining: _____

Extra Sample in Shed: Yes No

Size & Qty of Bottles Received

_____ x 5 Gal
_____ x 2.5 Gal
_____ x 1 Gal
_____ x 1 Liter
_____ x 500 mL
_____ x 250 mL
_____ x Other: _____

WATER QUALITY

WELL 5

EnviroTest Laboratories Inc.

ANALYTICAL REPORT

Job Number: 420-90570-1

SDG Number: Wild Oaks, Lewisboro, NY

Job Description: LBG, Inc.

For:
Leggette, Brashears & Graham, Inc.
4 Research Drive
Shelton, CT 06464

Attention: Stacy Stieber

Debra Bayer
Customer Service Manager
dbayer@envirotestlaboratories.com
06/16/2015

NYSDOH ELAP does not certify for all parameters. EnviroTest Laboratories does hold certification for all analytes where certification is offered by ELAP unless otherwise specified. Pursuant to NELAP, this report may not be reproduced, except in full, without written approval of the laboratory. EnviroTest Laboratories Inc. certifies that the analytical results contained herein apply only to the samples tested as received by our laboratory. All questions regarding this report should be directed to the EnviroTest Customer Service Representative.

EnviroTest Laboratories, Inc. Certifications and Approvals: NYSDOH 10142, NJDEP NY015, CTDOPH PH-0554

Job Narrative
420-J90570-1

Receipt
All samples were received in good condition within temperature requirements.

GC/MS VOA
No analytical or quality issues were noted.

Metals
No analytical or quality issues were noted.

General Chemistry
Method SM 4500 H+ B: The holding time for pH is 15 minutes, the samples were received outside of the holding time.

No other analytical or quality issues were noted.

Biology
No analytical or quality issues were noted.

METHOD SUMMARY

Client: Leggette, Brashears & Graham, Inc.

Job Number: 420-90570-1
SDG Number: Wild Oaks, Lewisboro, NY

Description	Lab Location	Method	Preparation Method
Matrix: Water			
ICP Metals by 200.7	EnvTest	EPA 200.7 Rev 4.4	
Sample Filtration	EnvTest		FILTRATION
200 Series Drinking Water Prep Determination Step	EnvTest		EPA 200
Total Metals Digestion for 200.7	EnvTest		EPA 200.7
ICPMS Metals by 200.8	EnvTest	EPA 200.8 Rev.5.4	
200 Series Drinking Water Prep Determination Step	EnvTest		EPA 200
Total Metals Digestion for 200.8	EnvTest		EPA 200.8
Mercury in Water by CVAA	EnvTest	EPA 245.1 Rev.3.0	
Digestion for CVAA Mercury in Waters	EnvTest		EPA 245.1
Anions by Ion Chromatography	EnvTest	MCAWW 300.0	
Anions by Ion Chromatography	EnvTest	EPA 300.0 Rev. 2.1	
EPA 504.1 EDB	Pace	EPA 504.1	
EPA 505 Pesticide/PCB	Pace	EPA 505	
EPA 515 Chlorinated Acids	Pace	EPA 515	
Purgeable Organic Compounds in Water by GC/MS	EnvTest	EPA-DW 524.2	
EPA 525.2 Semivolatile Organics	Pace	EPA 525.2	
EPA 531.1 Carbamate Pesticides in Drinki	Pace	EPA 531.1	
EPA 900 Series GA/GB/RA226/RA228/Gamma	Pace	EPA 900	
Uranium	Pace	STL-STL EPA	
Heterotropic Plate Count	EnvTest	IDEXX SIMPLATE	
Odor, Threshold Test	EnvTest	SM20 SM 2150B	
Alkalinity, Titration Method	EnvTest	SM21 SM 2320B-97,-11	
Corrosivity LSI Calculation	EnvTest	SM20 SM 2330B	
Hardness by Calculation	EnvTest	SM20 SM 2340B-97,-11	
pH	EnvTest	SM19 SM 4500 H+ B	
Nitrite by Colormetric	EnvTest	SM20 SM 4500B	
Total Coliform and Escherichia coli by Colilert - Presence/Absence	EnvTest	SMWW SM 9223	
Apparent Color	EnvTest	SM21 SM2120B-01,11	
Turbidity	EnvTest	SM21 SM2130B-01,11	
Total Dissolved Solids (Dried at 180 °C)	EnvTest	SM21 SM2540C-97,11	
Cyanide, Total: Colorimetric Method	EnvTest	SM21 SM4500 CN E-99	
Cyanide: Distillation	EnvTest		SM21 SM 4500 CN C
General Sub Contract Method	Pace	Subcontract	

METHOD SUMMARY

Client: Leggette, Brashears & Graham, Inc.

Job Number: 420-90570-1
SDG Number: Wild Oaks, Lewisboro, NY

Description	Lab Location	Method	Preparation Method

Lab References:

EnvTest = EnviroTest

Pace = Pace Analytical - Ormond Beach

Method References:

EPA = US Environmental Protection Agency

EPA-DW = "Methods For The Determination Of Organic Compounds In Drinking Water", EPA/600/4-88/039, December 1988 And Its Supplements.

IDEXX =

MCAWW = "Methods For Chemical Analysis Of Water And Wastes", EPA-600/4-79-020, March 1983 And Subsequent Revisions.

SM19 = "Standard Methods For The Examination Of Water And Wastewater", 19Th Edition, 1995."

SM20 = "Standard Methods For The Examination Of Water And Wastewater", 20th Edition."

SM21 = "Standard Methods For The Examination Of Water And Wastewater", 21st Edition

SMWW = "Standard Methods for the Examination of Water and Wastewater"

STL-STL = Severn Trent Laboratories, St. Louis, Facility Standard Operating Procedure.

METHOD / ANALYST SUMMARY

Client: Leggette, Brashears & Graham, Inc.

Job Number: 420-90570-1
SDG Number: Wild Oaks, Lewisboro, NY

Method	Analyst	Analyst ID
EPA-DW 524.2	Andersen, Eric C	ECA
EPA 200.7 Rev 4.4	Goldstein, Amy	AG
EPA 200.8 Rev.5.4	McPhillips, Julie	JM
EPA 245.1 Rev.3.0	Goldstein, Amy	AG
SM20 SM 2340B-97,-11	Goldstein, Amy	AG
MCAWW 300.0	Sirico, Derek	DS
EPA 300.0 Rev. 2.1	Cusack, Renee	RC
EPA 300.0 Rev. 2.1	Sirico, Derek	DS
IDEXX SIMPLATE	Travis, Lyndsey	LT
SM20 SM 2150B	Travis, Lyndsey	LT
SM21 SM 2320B-97,-11	Luis, Carlos	CL
SM20 SM 2330B	Cusack, Renee	RC
SM19 SM 4500 H+ B	Travis, Lyndsey	LT
SM20 SM 4500B	Sirico, Derek	DS
SMWW SM 9223	Travis, Lyndsey	LT
SM21 SM2120B-01,11	Travis, Lyndsey	LT
SM21 SM2130B-01,11	Travis, Lyndsey	LT
SM21 SM2540C-97,11	Travis, Lyndsey	LT
SM21 SM4500 CN E-99	Sirico, Derek	DS

SAMPLE SUMMARY

Client: Leggette, Brashears & Graham, Inc.

Job Number: 420-90570-1
SDG Number: Wild Oaks, Lewisboro, NY

Lab Sample ID	Client Sample ID	Client Matrix	Date/Time Sampled	Date/Time Received
420-90570-1	Well 5-5/21	Drinking Water	05/21/2015 1130	05/21/2015 1334

Client: Leggette, Brashears & Graham, Inc.

Job Number: 420-90570-1
Sdg Number: Wild Oaks, Lewisboro, NY

Client Sample ID: **Well 5-5/21**

Lab Sample ID: 420-90570-1
Client Matrix: Drinking Water

Date Sampled: 05/21/2015 1130
Date Received: 05/21/2015 1334

524.2 Purgeable Organic Compounds in Water by GC/MS

Method: 524.2
Preparation: N/A
Dilution: 1.0
Date Analyzed: 05/21/2015 2006
Date Prepared: N/A

Analysis Batch: 420-87011

Instrument ID: Agilent 7890A/5975C
Lab File ID: X052123.D
Initial Weight/Volume: 5 mL
Final Weight/Volume: 5 mL

Analyte	Result (ug/L)	Qualifier	RL
1,1,1,2-Tetrachloroethane	<0.500		0.500
1,1,1-Trichloroethane	<0.500		0.500
1,1,2,2-Tetrachloroethane	<0.500		0.500
1,1,2-Trichloroethane	<0.500		0.500
1,1-Dichloroethane	<0.500		0.500
1,1-Dichloroethene	<0.500		0.500
1,1-Dichloropropene	<0.500		0.500
1,2,3-Trichlorobenzene	<0.500		0.500
1,2,3-Trichloropropane	<0.500		0.500
1,2,4-Trichlorobenzene	<0.500		0.500
1,2,4-Trimethylbenzene	<0.500		0.500
1,2-Dichloroethane	<0.500		0.500
1,2-Dichlorobenzene	<0.500		0.500
1,2-Dichloropropane	<0.500		0.500
1,3-Dichloropropane	<0.500		0.500
1,4-Dichlorobenzene	<0.500		0.500
2,2-Dichloropropane	<0.500		0.500
Benzene	<0.500		0.500
Bromobenzene	<0.500		0.500
Bromochloromethane	<0.500		0.500
Bromomethane	<0.500		0.500
n-Butylbenzene	<0.500		0.500
cis-1,2-Dichloroethene	<0.500		0.500
cis-1,3-Dichloropropene	<0.500		0.500
Carbon tetrachloride	<0.500		0.500
Chlorobenzene	<0.500		0.500
Chloroethane	<0.500		0.500
Chloromethane	<0.500		0.500
Dibromomethane	<0.500		0.500
Ethylbenzene	<0.500		0.500
Dichlorodifluoromethane	<0.500		0.500
Hexachlorobutadiene	<0.500		0.500
Isopropylbenzene	<0.500		0.500
p-Isopropyltoluene	<0.500		0.500
Methylene Chloride	<0.500		0.500
m-Xylene & p-Xylene	<1.00		1.00
Methyl tert-butyl ether	<0.500		0.500
o-Xylene	<0.500		0.500
Tetrachloroethene	<0.500		0.500
Toluene	<0.500		0.500
trans-1,2-Dichloroethene	<0.500		0.500
trans-1,3-Dichloropropene	<0.500		0.500
Trichloroethene	<0.500		0.500
tert-Butylbenzene	<0.500		0.500

Client: Leggette, Brashears & Graham, Inc.

Job Number: 420-90570-1
Sdg Number: Wild Oaks, Lewisboro, NY

Client Sample ID: **Well 5-5/21**

Lab Sample ID: 420-90570-1
Client Matrix: Drinking Water

Date Sampled: 05/21/2015 1130
Date Received: 05/21/2015 1334

524.2 Purgeable Organic Compounds in Water by GC/MS

Method: 524.2
Preparation: N/A
Dilution: 1.0
Date Analyzed: 05/21/2015 2006
Date Prepared: N/A

Analysis Batch: 420-87011

Instrument ID: Agilent 7890A/5975C
Lab File ID: X052123.D
Initial Weight/Volume: 5 mL
Final Weight/Volume: 5 mL

Analyte	Result (ug/L)	Qualifier	RL
Trichlorofluoromethane	<0.500		0.500
Vinyl chloride	<0.500		0.500
Xylenes, Total	<1.50		1.50
Styrene	<0.500		0.500
sec-Butylbenzene	<0.500		0.500
1,3,5-Trimethylbenzene	<0.500		0.500
N-Propylbenzene	<0.500		0.500
1,3-Dichlorobenzene	<0.500		0.500
2-Chlorotoluene	<0.500		0.500
4-Chlorotoluene	<0.500		0.500

Surrogate	%Rec	Acceptance Limits
4-Bromofluorobenzene	98	71 - 120
Toluene-d8 (Surr)	111	79 - 121
1,2-Dichloroethane-d4 (Surr)	119	70 - 128

Client: Leggette, Brashears & Graham, Inc.

Job Number: 420-90570-1
Sdg Number: Wild Oaks, Lewisboro, NY

Client Sample ID: **Well 5-5/21**

Lab Sample ID: 420-90570-1
Client Matrix: Drinking Water

Date Sampled: 05/21/2015 1130
Date Received: 05/21/2015 1334

200.7 Rev 4.4 ICP Metals by 200.7

Method:	200.7 Rev 4.4	Analysis Batch: 420-87149	Instrument ID:	Thermo ICP
Preparation:	200	Prep Batch: 420-87055	Lab File ID:	N/A
Dilution:	1.0		Initial Weight/Volume:	50 mL
Date Analyzed:	05/26/2015 2326		Final Weight/Volume:	50 mL
Date Prepared:	05/22/2015 1745			

Analyte	Result (ug/L)	Qualifier	RL
Iron	<60.0		60.0
Manganese	<10.0		10.0
Zinc	<20.0		20.0

Method:	200.7 Rev 4.4	Analysis Batch: 420-87196	Instrument ID:	Thermo ICP
Preparation:	200	Prep Batch: 420-87055	Lab File ID:	N/A
Dilution:	1.0		Initial Weight/Volume:	50 mL
Date Analyzed:	05/28/2015 0403		Final Weight/Volume:	50 mL
Date Prepared:	05/22/2015 1745			

Analyte	Result (ug/L)	Qualifier	RL
Sodium	7850		200

200.7 Rev 4.4 ICP Metals by 200.7-Dissolved

Method:	200.7 Rev 4.4	Analysis Batch: 420-87384	Instrument ID:	None
Preparation:	200.7	Prep Batch: 420-87061	Lab File ID:	N/A
Dilution:	1.0		Initial Weight/Volume:	50 mL
Date Analyzed:	05/29/2015 1820		Final Weight/Volume:	50 mL
Date Prepared:	05/22/2015 1830			

Analyte	Result (ug/L)	Qualifier	RL
Iron	<60.0		60.0
Manganese	<10.0		10.0

Client: Leggette, Brashears & Graham, Inc.

Job Number: 420-90570-1
Sdg Number: Wild Oaks, Lewisboro, NY

Client Sample ID: **Well 5-5/21**

Lab Sample ID:	420-90570-1	Date Sampled:	05/21/2015 1130
Client Matrix:	Drinking Water	Date Received:	05/21/2015 1334

200.8 Rev.5.4 ICPMS Metals by 200.8

Method:	200.8 Rev.5.4	Analysis Batch: 420-87181	Instrument ID:	Perkin Elmer ELAN
Preparation:	200.8	Prep Batch: 420-87063	Lab File ID:	N/A
Dilution:	1.0		Initial Weight/Volume:	50 mL
Date Analyzed:	05/27/2015 1950		Final Weight/Volume:	50 mL
Date Prepared:	05/22/2015 1145			

Analyte	Result (ug/L)	Qualifier	RL
Silver	<1.00		1.00

Method:	200.8 Rev.5.4	Analysis Batch: 420-87181	Instrument ID:	Perkin Elmer ELAN
Preparation:	200	Prep Batch: 420-87055	Lab File ID:	N/A
Dilution:	1.0		Initial Weight/Volume:	50 mL
Date Analyzed:	05/27/2015 2134		Final Weight/Volume:	50 mL
Date Prepared:	05/22/2015 1745			

Analyte	Result (ug/L)	Qualifier	RL
Lead	<1.00		1.00
Arsenic	<1.40		1.40
Beryllium	<0.300		0.300
Cadmium	<1.00		1.00
Chromium	<7.00		7.00
Nickel	1.52		0.500
Antimony	<0.400		0.400
Thallium	<0.300		0.300
Selenium	<2.00		2.00

Method:	200.8 Rev.5.4	Analysis Batch: 420-87222	Instrument ID:	Perkin Elmer ELAN
Preparation:	200	Prep Batch: 420-87055	Lab File ID:	N/A
Dilution:	1.0		Initial Weight/Volume:	50 mL
Date Analyzed:	05/28/2015 1325		Final Weight/Volume:	50 mL
Date Prepared:	05/22/2015 1745			

Analyte	Result (ug/L)	Qualifier	RL
Barium	14.1		2.00

Client: Leggette, Brashears & Graham, Inc.

Job Number: 420-90570-1
Sdg Number: Wild Oaks, Lewisboro, NY

Client Sample ID: **Well 5-5/21**

Lab Sample ID:	420-90570-1	Date Sampled:	05/21/2015 1130
Client Matrix:	Drinking Water	Date Received:	05/21/2015 1334

245.1 Rev.3.0 Mercury in Water by CVAA

Method:	245.1 Rev.3.0	Analysis Batch: 420-87163	Instrument ID:	Perkin Elmer FIMS
Preparation:	245.1	Prep Batch: 420-87100	Lab File ID:	N/A
Dilution:	1.0		Initial Weight/Volume:	25 mL
Date Analyzed:	05/27/2015 1506		Final Weight/Volume:	25 mL
Date Prepared:	05/26/2015 1206			

Analyte	Result (ug/L)	Qualifier	RL
Mercury	<0.200		0.200

SM 2340B-97,-11 Hardness by Calculation

Method:	SM 2340B-97,-11	Analysis Batch: 420-87162	Instrument ID:	None
Preparation:	N/A		Lab File ID:	N/A
Dilution:	1.0		Initial Weight/Volume:	
Date Analyzed:	05/26/2015 2216		Final Weight/Volume:	
Date Prepared:	N/A			

Analyte	Result (mg/L)	Qualifier	RL
Calcium hardness as calcium carbonate	84.8		1.25

Client: Leggette, Brashears & Graham, Inc.

Job Number: 420-90570-1
Sdg Number: Wild Oaks, Lewisboro, NY

Biology

Client Sample ID: **Well 5-5/21**

Lab Sample ID: 420-90570-1
Client Matrix: Drinking Water

Date Sampled: 05/21/2015 1130
Date Received: 05/21/2015 1334

Analyte	Result	Qual	Units	Dil	Method
Coliform, Total	Present	g	CFU/100mL	1.0	SM 9223
Anly Batch: 420-87006	Date Analyzed	05/21/2015 1725			
Escherichia coli	Absent		CFU/100mL	1.0	SM 9223
Anly Batch: 420-87006	Date Analyzed	05/21/2015 1725			

Analyte	Result	Qual	Units	RL	Dil	Method
Heterotrophic Plate Count	62.0		CFU/mL	2.00	1.0	SIMPLATE
Anly Batch: 420-87103	Date Analyzed	05/21/2015 1615				

General Chemistry

Client: Leggette, Brashears & Graham, Inc.

Job Number: 420-90570-1
Sdg Number: Wild Oaks, Lewisboro, NY

General Chemistry

Client Sample ID: **Well 5-5/21**

Lab Sample ID: 420-90570-1
Client Matrix: Drinking Water

Date Sampled: 05/21/2015 1130
Date Received: 05/21/2015 1334

Analyte	Result	Qual	Units	RL	Dil	Method
Nitrate as N	0.504		mg/L	0.250	1.0	300.0
	Anly Batch: 420-87083	Date Analyzed	05/22/2015 1710			

Analyte	Result	Qual	Units	Dil	Method
Langelier Index	0.210		NONE	1.0	SM 2330B
	Anly Batch: 420-87767	Date Analyzed	06/12/2015 1344		

Client: Leggette, Brashears & Graham, Inc.

Job Number: 420-90570-1
Sdg Number: Wild Oaks, Lewisboro, NY

General Chemistry

Client Sample ID: **Well 5-5/21**

Lab Sample ID: 420-90570-1
Client Matrix: Drinking Water

Date Sampled: 05/21/2015 1130
Date Received: 05/21/2015 1334

Analyte	Result	Qual	Units	RL	Dil	Method
Alkalinity	91.9		mg/L	5.00	1.0	SM 2320B-97,-11
	Anly Batch: 420-87378	Date Analyzed	06/01/2015 1530			
Total Dissolved Solids	222		mg/L	5.00	1.0	SM2540C-97,11
	Anly Batch: 420-87191	Date Analyzed	05/26/2015 1425			
Sulfate	41.2		mg/L	10.0	2.0	300.0 Rev. 2.1
	Anly Batch: 420-87015	Date Analyzed	05/22/2015 0019			
Fluoride	<1.00		mg/L	1.00	2.0	300.0 Rev. 2.1
	Anly Batch: 420-87015	Date Analyzed	05/22/2015 0019			
Chloride	17.7		mg/L	15.0	10	300.0 Rev. 2.1
	Anly Batch: 420-87083	Date Analyzed	05/22/2015 1723			
Cyanide, Total	<0.00500		mg/L	0.00500	1.0	SM4500 CN E-99
	Anly Batch: 420-87277	Date Analyzed	05/29/2015 1520			
	Prep Batch: 420-87273	Date Prepared:	05/28/2015 1200			
Apparent Color	<2.00		Pt-Co	2.00	1.0	SM2120B-01,11
	Anly Batch: 420-87112	Date Analyzed	05/22/2015 0834			
pH@color measurement	7.70		SU	2.00	1.0	SM2120B-01,11
	Anly Batch: 420-87112	Date Analyzed	05/22/2015 0834			
Turbidity	0.324		NTU	0.100	1.0	SM2130B-01,11
	Anly Batch: 420-87109	Date Analyzed	05/22/2015 0822			
Odor	1.00		T.O.N.	1.00	1.0	SM 2150B
	Anly Batch: 420-87111	Date Analyzed	05/22/2015 0930			
Temp @ Odor Measurement	60.0		Degrees C	5.00	1.0	SM 2150B
	Anly Batch: 420-87111	Date Analyzed	05/22/2015 0930			
pH	7.70	H	SU	0.200	1.0	SM 4500 H+ B
	Anly Batch: 420-87045	Date Analyzed	05/21/2015 1806			
Temp @ pH Measurement	16.6		Degrees C	5.00	1.0	SM 4500 H+ B
	Anly Batch: 420-87045	Date Analyzed	05/21/2015 1806			
Nitrite as N	<0.0100		mg/L	0.0100	1.0	SM 4500B
	Anly Batch: 420-87089	Date Analyzed	05/21/2015 1545			

DATA REPORTING QUALIFIERS

Client: Leggette, Brashears & Graham, Inc.

Job Number: 420-90570-1
Sdg Number: Wild Oaks, Lewisboro, NY

Lab Section	Qualifier	Description
General Chemistry		
	H	Sample was prepped or analyzed beyond the specified holding time
Biology		
	g	Result fails applicable NYS drinking water standards

Definitions and Glossary

Client: Leggette, Brashears & Graham, Inc.

Job Number: 420-90570-1

Sdg Number: Wild Oaks, Lewisboro, NY

Abbreviation	These commonly used abbreviations may or may not be present in this report.
%R	Percent Recovery
DL, RA, RE	Indicates a Dilution, Reanalysis or Reextraction.
EPA	United States Environmental Protection Agency
MDL	Method Detection Limit - an estimate of the minimum amount of a substance that an analytical process can reliably detect. A MDL is analyte- and matrix-specific and may be laboratory-dependent.
ND	Not detected at the reporting limit (or MDL if shown).
QC	Quality Control
RL	Reporting Limit - the minimum levels, concentrations, or quantities of a target variable (e.g., target analyte) that can be reported with a specified degree of confidence.
RPD	Relative Percent Difference - a measure of the relative difference between two points.

EnviroTest Laboratories, Inc.

CHAIN OF CUSTODY

Lab Name: EnviroTest Laboratories
Address & Phone: 315 Fullerton Avenue, Newburgh, New York 12550 845-562-0890

REPORT# (Lab Use Only): 90570

PROJECT REFERENCE: Wild Oaks	PROJECT NO.	PROJECT LOCATION: Lewisboro, NY
ENVIROTEST PROJECT MANAGER: Debra Bayer	P.O. NUMBER	TOWN
CLIENT (SITE) PM: LBG, Inc.	CLIENT PHONE: 203-929-8555	CLIENT FAX
CLIENT NAME: Stacy Stieber		
CLIENT ADDRESS: 4 Research Drive, Suite 301, Shelton, CT 06484		
COMPANY CONTRACTING THIS WORK (if applicable):		

PAGE 1 of 1

TURNAROUND TIME: NORMAL X; QUICK ____; VERBAL ____

#OF COOLERS: 1

SAMPLE DATE	SAMPLE TIME	SAMPLE IDENTIFICATION	COMPOSITE (C) OR GRAB (G) INDICATE	AQUEOUS (WATER)	D (Drinking Water) or W (Waste Water) Indicate	SOLID OR SEMISOLID	OTHER Specify	~~Bleeder~~	40ml Vials HCL	40ml Sodium Thio.	250ml Amber Sodium Thio.	Liter Amber HCl/Na2SO3	250ml Plastic Nitric Acid	40ml Mon/Sod.Thio(liquid)	Liter Plastic	250ml Plastic Sodium Hyd.	125ml Plastic Sterile	Gallon Plastic Nitric	40ml Vials Unpres	REMARKS
5/21/15	1130	WC115-5/21						~~2~~ pg	3	2	1	~~2~~ 2 pg	1	2	4	1	2	1	3	Table 8B (Sb,As,Ba,Be,Cd,Cr,Cn,Hg,Ni
																				Se,Tl,F)
																				Table 8C (NO3,NO2)
								2-liter Amber unpres.												Table 8D (Cl,Fe,Mn,Ag,Na,SO4,Zn,Odor,Color)
								1-250ml Amber Unpres.												524.2 (POC,MTBE,Vinyl Chloride)
								2-250ml Plastic Unpres.												SOCs (504,508,515,525,531)
								~~30~~ ~~27~~ 27 pg Total Containers												Additional Tests (Total coliform
																				thru Zinc)
																				Diss. Fe, Mn
																				Radon, Gross Alpha/Beta,
																				Radium 226/228, Total Uranium
																				~~MPA/Crypto/Giardia~~ pg

RELINQUISHED BY: (SIGNATURE)	COMPANY	DATE	TIME	RECEIVED BY: (SIGNATURE)	COMPANY	DATE	TIME
Pamela Lind	LBG	5/21/15	1334				
SAMPLED BY: (SIGNATURE) Pamela Lind	COMPANY LBG	DATE 5/21/15	TIME ~~1334~~ 1130	RECEIVED BY: (SIGNATURE)	COMPANY	DATE	TIME
RELINQUISHED BY: (SIGNATURE)	COMPANY	DATE	TIME	RECEIVED BY: (SIGNATURE)	COMPANY	DATE	TIME

SUBCONTACT: PACE-SOC,Radio,Radon; MPA - Mohawk

RECEIVED FOR LABORATORY BY: (SIGNATURE)	DATE	TIME	CUSTODY INTACT YES NO	Cooler Temp:	LABORATORY REMARKS: ICE ✓ pH____ CL2____ Reveiwed by____
G Marcuso	5/21/15	1334		6.5	

LOGIN SAMPLE RECEIPT CHECK LIST

Client: Leggette, Brashears & Graham, Inc.

Job Number: 420-90570-1
SDG Number: Wild Oaks, Lewisboro, NY

Login Number: **90570**

Question	T/F/NA	Comment
Samples were collected by ETL employee as per SOP-SAM-1	NA	
The cooler's custody seal, if present, is intact.	NA	
The cooler or samples do not appear to have been compromised or tampered with.	True	
Samples were received on ice.	True	
Cooler Temperature is recorded.	True	6.5C
Cooler Temp. is within method specified range.(0-6 C PW, 0-8 C NPW, or BAC <10 C	True	
If false, was sample received on ice within 6 hours of collection.	NA	
Based on above criteria cooler temperature is acceptable.	True	
COC is present.	True	
COC is filled out in ink and legible.	True	
COC is filled out with all pertinent information.	True	
There are no discrepancies between the sample IDs on the containers and the COC.	True	
Samples are received within Holding Time.	True	
Sample containers have legible labels.	True	
Containers are not broken or leaking.	True	
Sample collection date/times are provided.	True	
Appropriate sample containers are used.	True	
Sample bottles are completely filled.	True	
There is sufficient vol. for all requested analyses, incl. any requested MS/MSDs	True	
VOA sample vials do not have headspace or bubble is <6mm (1/4") in diameter.	True	
If necessary, staff have been informed of any short hold time or quick TAT needs	True	
Multiphasic samples are not present.	True	
Samples do not require splitting or compositing.	True	

MOHAWK VALLEY WATER AUTHORITY

Final Result Report for *ENVIROTEST LABORATORIES, INC.*

Sample ID:	**05/20/15 ENVIROTEST – WILD OAKS**
LIMS #:	**90419**
Client:	**#1905 – Envirotest Laboratories, Inc.**
Source:	**Wild Oaks Water System – Raw Water**

Method 1623 QUALITY CONTROL

Weekly Method Blank	***Giardia* Count: 0**	***Cryptosporidium* Count: 0**
Weekly OPR Sample	***Giardia* % Recovery: 46.0**	***Cryptosporidium* % Recovery: 51.5**

SAMPLE RESULTS

	Method	Total FA Count	Volume Analyzed	# cysts/L
Giardia	EPA 1623	0	10.00 L	0.000
Cryptosporidium	EPA 1623	0	10.00 L	0.000

	Method	Result
MPA	NYSDOH Modified MPA	Positive *(see attached report)*

MATRIX SPIKE RESULTS

	# Spiked:	# Recovered:	% Recovery
Giardia	N/A		
Cryptosporidium	N/A		

Approved: Philip A Tangorra

Philip A. Tangorra
QA Officer

Analysis performed at:
Mohawk Valley Water Authority
Telephone (315) 792-0301 • One Kennedy Plaza • Utica, NY 13502 • FAX (315) 792-5201
USEPA ID#: NY01505 New York State ELAP ID#: 10319 Pennsylvania DEP ID#: 68-03428

MEMBER OF:
American Water Works Association (AWWA) • Water Research Foundation • NYAAEL

90534

MOHAWK VALLEY WATER AUTHORITY
Water Quality Department
One Kennedy Plaza, 3rd Floor Lab
Utica, NY 13502
www.mvwa.us

Connie Schreppel, Director
Philip Tangorra, Research Scientist

Telephone: (315) 792-0338
Fax: (315) 792-5201

CHAIN OF CUSTODY

Sample ID: (A) Well 5 - 5/20
Internal Tracking #: _____
(Internal use only)

Client:	LBG
Source:	Wild Oaks Water System

SAMPLE COLLECTION

Sampler	Date of Collection	Time of Collection	JS/PL	5/20/15	1305
Water Type (Raw, Finished, Stream, etc.)			Raw		
Temp. (°C)	Turbidity (NTU)		7.26	19.3	
Type of Sample (circle)			Filtered/Grab		
Volume Filtered			NA		

ANALYSES REQUESTED
(circle)

Giardia/Crypto
~~HPC~~
Other*
*Details: _____

MPA
R2A

Total Coliform/*E. coli*
Chemistries*

CUSTODY TRANSFER(S)

Relinquished by: Pamela Find Date: 5/20/15 Time: 1440
Received by: [illegible] Date: 5/20/15 Time: 1440

Relinquished by: _____ Date: _____ Time: _____
Received by: _____ Date: _____ Time: _____

Lab Receipt: Date: 5/21/15 Time: 9:41 Temp: 3.2°C Condition: Intact Initials: jbh

Laboratory Name: Mohawk Valley Water Authority	Laboratory ID: NY01505

Method 1622/1623 Bench Sheet

Sample Identification Information

* Lab Sample ID: 5-20-15 ET well 5	Person Receiving Sample: JH
* PWS ID:	*Sample collection date and time: 5-20-15/13:05
* Facility ID:	Turbidity (NTU): 0.72
* Sample Collection Point ID:	Temperature, date and time @ sample receipt: 5-21-15/9:41/3.2
* Sample type (circle one): Initial precision and recovery (IPR) Method blank Field (monitoring) sample Ongoing precision and recovery (OPR) Matrix spike (MS) Proficiency testing (PT)	

Sample Spiking Information (for IPR, OPR, MS, and PT samples only)

* Estimated number spiked: Crypto: Giardia:	Spiking time:
* Sample volume spiked (L):	Spiking date:
Spiking suspension ID:	Spiking analyst:

Sample Filtration

Filter type (circle one): Envirochek Envirochek HV Filta-Max CrypTest Other (specify)	
Did filter clog? (circle one): Yes No	Filtration time: 09:50 Filter lot number: L 1402 0430
* Number of filter(s) used?: 1	Filtration date: 5-21-15
* Volume filtered (L) to nearest 1/4L: 10.0L	Filtration analyst: DW Training

Sample Elution (must be initiated within 96 hours of sample collection/filtration)

Elution procedure (circle one): Wrist shaker Filta-Max wash station Stomacher Backflush/sonication	
Type of Elution buffer: PBST	Elution time: 10:40
Elution buffer lot number: 5-21-15	Elution date: 5-21-15
Elution buffer expiration date: 6-21-15	Elution analyst: PD

Concentration, IMS, and Slide Preparation

(must be completed on same working day that samples are eluted).

Procedure (circle one): Centrifugation Filta-Max concentrator Other (specify)	
* Pellet volume after concentration (mL) to nearest 0.1mL: 0.2	Concentration analyst: PD
* Total volume of resuspended concentrate (mL): 10	IMS analyst: PD
* Volume of resuspended concentrate transferred to IMS (mL): 10	Slide preparation time: 3:30
Number of subsamples processed through entire method: 0	Slide preparation date: 5-21-15
IMS lot number: 1639271	Slide preparation analyst: PD
IMS system (circle one): Dynal GC-Combo Dynal anti-Crypto Other (specify)	
Slides (circle one): Meridian Dynal Waterborne Other (specify) 111	

Slide Staining (must be completed within 72 hours of application of sample to the slide)

Detection kit (circle one): BTF EasyStain Merifluor Crypt-a-glo Giardi-a-glo Aqua-glo Other (specify)	
Detection kit lot number: GC-3107	Staining date and time: 5-22-15/11:30
Number of slides for this sample: 1	Staining analyst: PD

* Examination Results as Total FA number from all slides for sample Cryptosporidium: Ø Giardia: Ø

Comments:

ENVIROTEST LABORATORIES, INC.

Client 1905 PWS Id

Lims 90419 - 05202015

Sample Date/Time 05202015 1305

* = Data entered into LT2/Stage2 Data Collection and Tracking S

Laboratory name: Mohawk Valley Water Authority	Laboratory ID: NY01505

Method 1622/1623 Slide Examination Form

Sample ID: 5-20-15 ET Well 5	Analyst: [illegible]
Examination/verification completion date and time: 5-26-15 12:00 (must be completed within 168 hours (7 days) of staining)	Slide number: 90419 Total number of slides for this sample: 1
Positive staining control acceptable ☒ YES ☐ NO	Negative staining control acceptable ☒ YES ☐ NO
FITC, Size, Shape, DIC and DAPI Characteristics of 3 Oocysts Recorded ☒ YES ☐ NO	

Cryptosporidium Results

Object located by FA No.	Shape (oval or round)	Size L x W (µm)	DAPI -	DAPI +		D.I.C.		
			Light blue internal staining, no distinct nuclei, green rim (A)	Intense blue internal staining (B)	Number of nuclei stained sky blue (C)	Empty oocysts (D)	Oocysts with amorphous structure (E)	Oocysts with internal structure (F) Number of sporozoites
1								
2								
3								
4								
5								
6								
7								
8								
9								
10								

Total FA number from this slide: Ø	D.I.C. - Total number of empty oocysts (D):
DAPI -: Total number (A):	D.I.C. - Total number of oocysts with amorphous structure (E):
DAPI +: Total number (B):	D.I.C. - Total number of oocysts with internal structure (F):
DAPI +: Total number (C):	Total count DAPI + (C) that show structure by D.I.C. (F):

Giardia Results

Object located by FA No.	Shape (oval or round)	Size L x W (µm)	DAPI -	DAPI +		D.I.C.				
			Light blue internal staining, no distinct nuclei, green rim (A)	Intense blue internal staining (B)	Number of nuclei stained sky blue (C)	Empty cysts (D)	Cysts with amorphous structure (E)	Cysts with internal structure (F) Number of nuclei	Median body	Axonemes
1										
2										
3										
4										
5										
6										
7										
8										
9										
10										

Total FA number from this slide: Ø	D.I.C.: Total number of empty cysts (D):
DAPI-: Total number (A):	D.I.C.: Total number of cysts with amorphous structure (E):
DAPI+: Total number (B):	D.I.C.: Total number of cysts with one internal structure (F):
DAPI+: Total number (C):	D.I.C.: Total number of cysts with >one internal structure (F):
	Total number DAPI + (C) that show structure by D.I.C. (F):

MVWA WATER QUALITY LABORATORY

One Kennedy Plaza
Utica, NY 13502

Phone: (315) 792-0338
Fax: (315) 792-5201

MOHAWK VALLEY WATER AUTHORITY

Report of Examination

Microscopic Examination for Microorganisms (MPA)

Sample : LBG Project –Wild Oaks Envirotest LIMS# 90419
Sample Date: 5-20-2015
Date completed: 5-21-2015

Sample was analyzed using modified MPA and examined using phase contrast and epifluorescence microscopy.

9000.0 ml of the sample was examined

Organisms seen:

Phylum Chlorophyta:

Unidentified ellipsoidal and spherical green algae exhibiting characteristic chlorophyll fluorescence

Kingdom Plantae:

Pollen

Plant debris

Copious debris may have prohibited further identification of organisms containing chlorophyll

A sample blank was prepared using distilled water and no organisms were observed in the blank.

A positive control culture of *Selenestrum sp* exhibited characteristics of chlorophyll fluorescence.

MVWA WATER QUALITY LABORATORY

One Kennedy Plaza
Utica, NY 13502

Phone: (315) 792-0338
Fax: (315) 792-5201

MOHAWK VALLEY WATER AUTHORITY

MPA Worksheet

Client Envirotest LBG proj

Lims# 90419

Date Sampled 5/20/15

Date Completed 5/20/15

Results:

pollen
Red + oval w/ ⊂

Coprini debris

F-2

EnviroTest Laboratories, Inc.
315 Fullerton Avenue
Newburgh, NY 12550
Phone (845) 562-0890 Fax (845) 562-0841

Chain of Custody Record

EnviroTest Laboratories Inc.

Client Information (Sub Contract Lab)
Client Contact: Shipping/Receiving
Company: Mohawk Valley Water Authority
Address: Water Quality Dept., One Kennedy Plaza, 3rd Floor Lab,
City: Utica
State, Zip: NY, 13502
Phone:
Email:
Project Name: LBG, Inc.
Site:

Sampler:
Phone:
Lab PM: Bayer, Debra
E-Mail: dbayer@envirotestlaboratories.com
Carrier Tracking No(s):
COC No: 420-7601.1
Page: Page 1 of 1
STL Job #: 420-90534-1

Due Date Requested: 6/1/2015
TAT Requested (days):
PO #:
WO #:
Project #: 42001269
SSOW#:

Analysis Requested

Preservation Codes:
A - HCL, B - NaOH, C - Zn Acetate, D - Nitric Acid, E - NaHSO4, F - MeOH, G - Amchlor, H - Ascorbic Acid, I - Ice, J - DI Water, K - EDTA, L - EDA
M - Hexane, N - None, O - AsNaO2, P - Na2O4S, Q - Na2SO3, R - Na2S2SO3, S - H2SO4, T - TSP Dodecahydrate, U - Acetone, V - MCAA, W - ph 4-5, Z - other (specify)
Other:

Sample Identification Client ID (Lab ID)	Sample Date	Sample Time	Sample Type (C=comp, G=grab)	Matrix (W=water, S=solid, O=waste/oil, BT=Tissue, A=Air)	Field Filtered Sample (Yes or No)	Perform MS/MSD (Yes or No)	SUBCONTRACT/ MPA	SUBCONTRACT/ Crypto & Giardia	Total Number of containers	Special Instructions/Note:
			Preservation Code:							
Wild Oaks Water System/Well 5-5/20 (420-90534-1)	5/20/15	13:05		Water			X	X	2	

MPA - 9L

Turb D-72

Possible Hazard Identification
☐ Non-Hazard ☐ Flammable ☐ Skin Irritant ☐ Poison B ☐ Unknown ☐ Radiological

Sample Disposal (A fee may be assessed if samples are retained longer than 1 month)
☐ Return To Client ☐ Disposal By Lab ☐ Archive For _____ Months

Deliverable Requested: I, II, III, IV, Other (specify)

Special Instructions/QC Requirements:

Empty Kit Relinquished by: | Date: | Time: | Method of Shipment:

Relinquished by	Date/Time	Company	Received by	Date/Time	Company
[signature]	5/20/15 16:00	EnV.			
Relinquished by:	Date/Time:	Company	Received by:	Date/Time:	Company
Relinquished by:	Date/Time:	Company	Received by:	Date/Time:	Company

Custody Seals Intact: Δ Yes Δ No
Custody Seal No.:
Cooler Temperature(s) °C and Other Remarks:

Page 7 of 7

Pace Analytical Services, Inc.
8 East Tower Circle
Ormond Beach, FL 32174
(386)672-5668

June 03, 2015

Ron Bayer
EnviroTest Laboratories Inc.
315 Fullerton Avenue
Newburgh, NY 12550

RE: Project: LBG, Inc.
Pace Project No.: 35189601

Dear Ron Bayer:
Enclosed are the analytical results for sample(s) received by the laboratory on May 22, 2015. The results relate only to the samples included in this report. Results reported herein conform to the most current TNI standards and the laboratory's Quality Assurance Manual, where applicable, unless otherwise noted in the body of the report.

If you have any questions concerning this report, please feel free to contact me.

Sincerely,

Bo Garcia
bo.garcia@pacelabs.com
Project Manager

Enclosures

cc: Debra Bayer, EnviroTest Laboratories Inc.
Renee Cusack, EnviroTest Laboratories Inc.
Joyce Esposito, EnviroTest Laboratories Inc.
Janine Rader, EnviroTest Laboratories Inc.
Meredith Ruthven, EnviroTest Laboratories Inc.

REPORT OF LABORATORY ANALYSIS

This report shall not be reproduced, except in full,
without the written consent of Pace Analytical Services, Inc..

Pace Analytical Services, Inc.
8 East Tower Circle
Ormond Beach, FL 32174
(386)672-5668

CERTIFICATIONS

Project: LBG, Inc.
Pace Project No.: 35189601

Pennsylvania Certification IDs
1638 Roseytown Rd Suites 2,3&4, Greensburg, PA 15601
ACLASS DOD-ELAP Accreditation #: ADE-1544
Alabama Certification #: 41590
Arizona Certification #: AZ0734
Arkansas Certification
California/TNI Certification #: 04222CA
Colorado Certification
Connecticut Certification #: PH-0694
Delaware Certification
Florida/TNI Certification #: E87683
Guam/PADEP Certification
Hawaii/PADEP Certification
Idaho Certification
Illinois/PADEP Certification
Indiana/PADEP Certification
Iowa Certification #: 391
Kansas/TNI Certification #: E-10358
Kentucky Certification #: 90133
Louisiana DHH/TNI Certification #: LA140008
Louisiana DEQ/TNI Certification #: 4086
Maine Certification #: PA00091
Maryland Certification #: 308
Massachusetts Certification #: M-PA1457
Michigan/PADEP Certification
Missouri Certification #: 235
Montana Certification #: Cert 0082
Nebraska Certification #: NE-05-29-14
Nevada Certification
New Hampshire/TNI Certification #: 2976
New Jersey/TNI Certification #: PA 051
New Mexico Certification
New York/TNI Certification #: 10888
North Carolina Certification #: 42706
North Dakota Certification #: R-190
Oregon/TNI Certification #: PA200002
Pennsylvania/TNI Certification #: 65-00282
Puerto Rico Certification #: PA01457
South Dakota Certification
Tennessee Certification #: TN2867
Texas/TNI Certification #: T104704188
Utah/TNI Certification #: PA014572014-4
Vermont Dept. of Health: ID# VT-0282
Virgin Island/PADEP Certification
Virginia/VELAP Certification #: 460198
Washington Certification #: C868
West Virginia DEP Certification #: 143
West Virginia DHHR Certification #: 9964C
Wisconsin/PADEP Certification
Wyoming Certification #: 8TMS-Q

Ormond Beach Certification IDs
8 East Tower Circle, Ormond Beach, FL 32174
Alabama Certification #: 41320
Connecticut Certification #: PH-0216
Delaware Certification: FL NELAC Reciprocity
Florida Certification #: E83079
Georgia Certification #: 955
Guam Certification: FL NELAC Reciprocity
Hawaii Certification: FL NELAC Reciprocity
Illinois Certification #: 200068
Indiana Certification: FL NELAC Reciprocity
Kansas Certification #: E-10383
Kentucky Certification #: 90050
Louisiana Certification #: FL NELAC Reciprocity
Louisiana Environmental Certificate #: 05007
Maryland Certification: #346
Massachusetts Certification #: M-FL1264
Michigan Certification #: 9911
Mississippi Certification: FL NELAC Reciprocity
Missouri Certification #: 236
Montana Certification #: Cert 0074
Nebraska Certification: NE-OS-28-14
Nevada Certification: FL NELAC Reciprocity
New Hampshire Certification #: 2958
New Jersey Certification #: FL765
New York Certification #: 11608
North Carolina Environmental Certificate #: 667
Pennsylvania Certification #: 68-00547
Puerto Rico Certification #: FL01264
South Carolina Certification: #96042001
Tennessee Certification #: TN02974
Texas Certification: FL NELAC Reciprocity
US Virgin Islands Certification: FL NELAC Reciprocity
Virginia Environmental Certification #: 460165
Washington Certification #: C955
West Virginia Certification #: 9962C
Wisconsin Certification #: 399079670
Wyoming (EPA Region 8): FL NELAC Reciprocity

This report shall not be reproduced, except in full,
without the written consent of Pace Analytical Services, Inc..

Pace Analytical Services, Inc.
8 East Tower Circle
Ormond Beach, FL 32174
(386)672-5668

SAMPLE SUMMARY

Project: LBG, Inc.
Pace Project No.: 35189601

Lab ID	Sample ID	Matrix	Date Collected	Date Received
35189601001	**90570-1**	Drinking Water	05/21/15 11:30	05/22/15 10:55

This report shall not be reproduced, except in full,
without the written consent of Pace Analytical Services, Inc..

Pace Analytical Services, Inc.
8 East Tower Circle
Ormond Beach, FL 32174
(386)672-5668

SAMPLE ANALYTE COUNT

Project: LBG, Inc.
Pace Project No.: 35189601

Lab ID	Sample ID	Method	Analysts	Analytes Reported	Laboratory
35189601001	**90570-1**	EPA 504.1	AYF	2	PASI-O
		EPA 508.1	JTJ	18	PASI-O
		EPA 515.3	LJM	8	PASI-O
		EPA 531.1	WFH	9	PASI-O
		EPA 525.2	WFH	8	PASI-O
		SM 7500Rn-B	FCC	1	PASI-PA
		EPA 900.0	FCC	2	PASI-PA
		EPA 903.1	JC2	1	PASI-PA
		EPA 904.0	JLW	1	PASI-PA
		EPA 908.0	LAL	1	PASI-PA

This report shall not be reproduced, except in full,
without the written consent of Pace Analytical Services, Inc..

Pace Analytical Services, Inc.
8 East Tower Circle
Ormond Beach, FL 32174
(386)672-5668

ANALYTICAL RESULTS

Project: LBG, Inc.
Pace Project No.: 35189601

Sample: 90570-1 **Lab ID: 35189601001** Collected: 05/21/15 11:30 Received: 05/22/15 10:55 Matrix: Drinking Water

Parameters	Results	Units	PQL	MDL	DF	Prepared	Analyzed	CAS No.	Qual
504.1 GCS EDB and DBCP	Analytical Method: EPA 504.1 Preparation Method: EPA 504.1								
1,2-Dibromo-3-chloropropane	**<0.0051**	ug/L	0.021	0.0051	1	05/26/15 12:10	05/27/15 00:25	96-12-8	
1,2-Dibromoethane (EDB)	**<0.0064**	ug/L	0.010	0.0064	1	05/26/15 12:10	05/27/15 00:25	106-93-4	
508.1 GCS Pesticides	Analytical Method: EPA 508.1 Preparation Method: EPA 508.1								
Alachlor	**<0.032**	ug/L	0.19	0.032	1	05/28/15 10:00	05/29/15 04:48	15972-60-8	
Atrazine	**<0.020**	ug/L	0.095	0.020	1	05/28/15 10:00	05/29/15 04:48	1912-24-9	
gamma-BHC (Lindane)	**<0.0028**	ug/L	0.019	0.0028	1	05/28/15 10:00	05/29/15 04:48	58-89-9	
Butachlor	**<0.014**	ug/L	0.095	0.014	1	05/28/15 10:00	05/29/15 04:48	23184-66-9	
Chlordane (Technical)	**<0.045**	ug/L	0.19	0.045	1	05/28/15 10:00	05/29/15 04:48	57-74-9	
Dieldrin	**<0.013**	ug/L	0.095	0.013	1	05/28/15 10:00	05/29/15 04:48	60-57-1	
Endrin	**<0.0019**	ug/L	0.0095	0.0019	1	05/28/15 10:00	05/29/15 04:48	72-20-8	
Heptachlor	**<0.0057**	ug/L	0.038	0.0057	1	05/28/15 10:00	05/29/15 04:48	76-44-8	
Heptachlor epoxide	**<0.0028**	ug/L	0.019	0.0028	1	05/28/15 10:00	05/29/15 04:48	1024-57-3	
Hexachlorobenzene	**<0.010**	ug/L	0.095	0.010	1	05/28/15 10:00	05/29/15 04:48	118-74-1	
Hexachlorocyclopentadiene	**<0.030**	ug/L	0.095	0.030	1	05/28/15 10:00	05/29/15 04:48	77-47-4	
Methoxychlor	**<0.013**	ug/L	0.095	0.013	1	05/28/15 10:00	05/29/15 04:48	72-43-5	
Metolachlor	**<0.010**	ug/L	0.095	0.010	1	05/28/15 10:00	05/29/15 04:48	51218-45-2	
PCB, Total	**<0.076**	ug/L	0.095	0.076	1	05/28/15 10:00	05/29/15 04:48	1336-36-3	
Propachlor	**<0.0095**	ug/L	0.095	0.0095	1	05/28/15 10:00	05/29/15 04:48	1918-16-7	
Simazine	**<0.042**	ug/L	0.066	0.042	1	05/28/15 10:00	05/29/15 04:48	122-34-9	
Toxaphene	**<0.58**	ug/L	0.95	0.58	1	05/28/15 10:00	05/29/15 04:48	8001-35-2	
Surrogates									
Decachlorobiphenyl (S)	127	%	70-130		1	05/28/15 10:00	05/29/15 04:48	2051-24-3	
515.3 Chlorinated Herbicides	Analytical Method: EPA 515.3 Preparation Method: EPA 515.3								
2,4-D	**<0.081**	ug/L	0.10	0.081	1	06/01/15 09:00	06/02/15 02:27	94-75-7	
Dalapon	**<0.89**	ug/L	1.0	0.89	1	06/01/15 09:00	06/02/15 02:27	75-99-0	
Dicamba	**<0.067**	ug/L	0.10	0.067	1	06/01/15 09:00	06/02/15 02:27	1918-00-9	
Dinoseb	**<0.16**	ug/L	0.20	0.16	1	06/01/15 09:00	06/02/15 02:27	88-85-7	
Pentachlorophenol	**<0.030**	ug/L	0.040	0.030	1	06/01/15 09:00	06/02/15 02:27	87-86-5	
Picloram	**<0.094**	ug/L	0.10	0.094	1	06/01/15 09:00	06/02/15 02:27	1918-02-1	
2,4,5-TP (Silvex)	**<0.16**	ug/L	0.20	0.16	1	06/01/15 09:00	06/02/15 02:27	93-72-1	
Surrogates									
2,4-DCAA (S)	82	%	70-130		1	06/01/15 09:00	06/02/15 02:27	19719-28-9	
531.1 HPLC Carbamates	Analytical Method: EPA 531.1								
Aldicarb	**<0.70**	ug/L	2.0	0.70	1		05/28/15 18:47	116-06-3	
Aldicarb sulfone	**<0.60**	ug/L	2.0	0.60	1		05/28/15 18:47	1646-88-4	
Aldicarb sulfoxide	**<0.67**	ug/L	2.0	0.67	1		05/28/15 18:47	1646-87-3	
Carbofuran	**<0.75**	ug/L	2.0	0.75	1		05/28/15 18:47	1563-66-2	
3-Hydroxycarbofuran	**<0.51**	ug/L	2.0	0.51	1		05/28/15 18:47	16655-82-6	
Methomyl	**<0.57**	ug/L	2.0	0.57	1		05/28/15 18:47	16752-77-5	
Oxamyl	**<0.47**	ug/L	2.0	0.47	1		05/28/15 18:47	23135-22-0	
Carbaryl	**<0.28**	ug/L	2.0	0.28	1		05/28/15 18:47	63-25-2	
Surrogates									
Propoxur (S)	103	%	80-120		1		05/28/15 18:47	114-26-1	

REPORT OF LABORATORY ANALYSIS

This report shall not be reproduced, except in full,
without the written consent of Pace Analytical Services, Inc..

Pace Analytical Services, Inc.
8 East Tower Circle
Ormond Beach, FL 32174
(386)672-5668

ANALYTICAL RESULTS

Project: LBG, Inc.
Pace Project No.: 35189601

Sample: 90570-1 **Lab ID: 35189601001** Collected: 05/21/15 11:30 Received: 05/22/15 10:55 Matrix: Drinking Water

Parameters	Results	Units	PQL	MDL	DF	Prepared	Analyzed	CAS No.	Qual
525.2 Base Neutral Extractable	Analytical Method: EPA 525.2 Preparation Method: EPA 525.2								
Aldrin	**<0.034**	ug/L	0.095	0.034	1	05/28/15 10:00	05/28/15 17:15	309-00-2	
Benzo(a)pyrene	**<0.018**	ug/L	0.095	0.018	1	05/28/15 10:00	05/28/15 17:15	50-32-8	
bis(2-Ethylhexyl)adipate	**<0.36**	ug/L	1.5	0.36	1	05/28/15 10:00	05/28/15 17:15	103-23-1	
bis(2-Ethylhexyl)phthalate	**<0.47**	ug/L	1.9	0.47	1	05/28/15 10:00	05/28/15 17:15	117-81-7	
Metribuzin	**<0.029**	ug/L	0.28	0.029	1	05/28/15 10:00	05/28/15 17:15	21087-64-9	
Surrogates									
1,3-Dimethyl-2-nitrobenzene(S)	648	%	70-130		1	05/28/15 10:00	05/28/15 17:15	81209	IS,S3
Perylene-d12 (S)	108	%	70-130		1	05/28/15 10:00	05/28/15 17:15	1520963	
Triphenylphosphate (S)	112	%	70-130		1	05/28/15 10:00	05/28/15 17:15	115-86-6	

This report shall not be reproduced, except in full,
without the written consent of Pace Analytical Services, Inc..

Pace Analytical Services, Inc.
8 East Tower Circle
Ormond Beach, FL 32174
(386)672-5668

QUALITY CONTROL DATA

Project: LBG, Inc.
Pace Project No.: 35189601

QC Batch: GCSV/14703 | Analysis Method: EPA 531.1
QC Batch Method: EPA 531.1 | Analysis Description: 531.1 HPLC Carbamate
Associated Lab Samples: 35189601001

METHOD BLANK: 1224530 | Matrix: Water
Associated Lab Samples: 35189601001

Parameter	Units	Blank Result	Reporting Limit	Analyzed	Qualifiers
3-Hydroxycarbofuran	ug/L	<0.51	2.0	05/28/15 12:40	
Aldicarb	ug/L	<0.70	2.0	05/28/15 12:40	
Aldicarb sulfone	ug/L	<0.60	2.0	05/28/15 12:40	
Aldicarb sulfoxide	ug/L	<0.67	2.0	05/28/15 12:40	
Carbaryl	ug/L	<0.28	2.0	05/28/15 12:40	
Carbofuran	ug/L	<0.75	2.0	05/28/15 12:40	
Methomyl	ug/L	<0.57	2.0	05/28/15 12:40	
Oxamyl	ug/L	<0.47	2.0	05/28/15 12:40	
Propoxur (S)	%	108	80-120	05/28/15 12:40	

LABORATORY CONTROL SAMPLE: 1224531

Parameter	Units	Spike Conc.	LCS Result	LCS % Rec	% Rec Limits	Qualifiers
3-Hydroxycarbofuran	ug/L	10	10.4	104	80-120	
Aldicarb	ug/L	10	11.3	113	80-120	
Aldicarb sulfone	ug/L	10	9.9	99	80-120	
Aldicarb sulfoxide	ug/L	10	12.0	120	80-120	
Carbaryl	ug/L	10	10.7	107	80-120	
Carbofuran	ug/L	10	11.7	117	80-120	
Methomyl	ug/L	10	10.5	105	80-120	
Oxamyl	ug/L	10	9.4	94	80-120	
Propoxur (S)	%			102	80-120	

MATRIX SPIKE & MATRIX SPIKE DUPLICATE: 1224532 1224533

Parameter	Units	92250781001 Result	MS Spike Conc.	MSD Spike Conc.	MS Result	MSD Result	MS % Rec	MSD % Rec	% Rec Limits	RPD	Max RPD	Qual
3-Hydroxycarbofuran	ug/L	ND	10	10	10.6	9.6	106	96	80-120	10	20	
Aldicarb	ug/L	ND	10	10	11.3	10.4	113	104	80-120	9	20	
Aldicarb sulfone	ug/L	ND	10	10	10.9	9.7	109	97	80-120	11	20	
Aldicarb sulfoxide	ug/L	ND	10	10	13.0	11.7	130	117	80-120	10	20	M1
Carbaryl	ug/L	ND	10	10	11.2	10	112	100	80-120	11	20	
Carbofuran	ug/L	ND	10	10	12.0	10.5	120	105	80-120	14	20	
Methomyl	ug/L	ND	10	10	10.7	9.6	107	96	80-120	11	20	
Oxamyl	ug/L	ND	10	10	10.0	8.7	100	87	80-120	14	20	
Propoxur (S)	%						111	101	80-120			

Results presented on this page are in the units indicated by the "Units" column except where an alternate unit is presented to the right of the result.

REPORT OF LABORATORY ANALYSIS

This report shall not be reproduced, except in full,
without the written consent of Pace Analytical Services, Inc..

Pace Analytical Services, Inc.
8 East Tower Circle
Ormond Beach, FL 32174
(386)672-5668

QUALITY CONTROL DATA

Project: LBG, Inc.
Pace Project No.: 35189601

QC Batch: OEXT/22548 | Analysis Method: EPA 504.1
QC Batch Method: EPA 504.1 | Analysis Description: 504 EDB DBCP
Associated Lab Samples: 35189601001

METHOD BLANK: 1223205 | Matrix: Water
Associated Lab Samples: 35189601001

Parameter	Units	Blank Result	Reporting Limit	Analyzed	Qualifiers
1,2-Dibromo-3-chloropropane	ug/L	<0.0049	0.020	05/26/15 19:52	
1,2-Dibromoethane (EDB)	ug/L	<0.0062	0.010	05/26/15 19:52	

LABORATORY CONTROL SAMPLE & LCSD: 1223206 1223207

Parameter	Units	Spike Conc.	LCS Result	LCSD Result	LCS % Rec	LCSD % Rec	% Rec Limits	RPD	Max RPD	Qualifiers
1,2-Dibromo-3-chloropropane	ug/L	.25	0.24	0.24	97	95	70-130	2	40	
1,2-Dibromoethane (EDB)	ug/L	.25	0.23	0.22	93	90	70-130	3	40	

MATRIX SPIKE & MATRIX SPIKE DUPLICATE: 1223208 1223209

Parameter	Units	40155183005 Result	MS Spike Conc.	MSD Spike Conc.	MS Result	MSD Result	MS % Rec	MSD % Rec	% Rec Limits	RPD	Max RPD	Qual
1,2-Dibromo-3-chloropropane	ug/L	ND	.44	.44	0.42	0.45	96	102	65-135	6	40	
1,2-Dibromoethane (EDB)	ug/L	ND	.44	.44	0.40	0.43	92	98	65-135	7	40	

Results presented on this page are in the units indicated by the "Units" column except where an alternate unit is presented to the right of the result.

REPORT OF LABORATORY ANALYSIS

This report shall not be reproduced, except in full,
without the written consent of Pace Analytical Services, Inc..

Pace Analytical Services, Inc.
8 East Tower Circle
Ormond Beach, FL 32174
(386)672-5668

QUALITY CONTROL DATA

Project: LBG, Inc.
Pace Project No.: 35189601

QC Batch: OEXT/22565 | Analysis Method: EPA 508.1
QC Batch Method: EPA 508.1 | Analysis Description: 508 GCS Pesticide
Associated Lab Samples: 35189601001

METHOD BLANK: 1223969 | Matrix: Water
Associated Lab Samples: 35189601001

Parameter	Units	Blank Result	Reporting Limit	Analyzed	Qualifiers
Alachlor	ug/L	<0.034	0.20	05/29/15 01:18	
Atrazine	ug/L	<0.021	0.10	05/29/15 01:18	
Butachlor	ug/L	<0.015	0.10	05/29/15 01:18	
Chlordane (Technical)	ug/L	<0.047	0.20	05/29/15 01:18	
Dieldrin	ug/L	<0.014	0.10	05/29/15 01:18	
Endrin	ug/L	<0.0020	0.010	05/29/15 01:18	
gamma-BHC (Lindane)	ug/L	<0.0030	0.020	05/29/15 01:18	
Heptachlor	ug/L	<0.0060	0.040	05/29/15 01:18	
Heptachlor epoxide	ug/L	<0.0030	0.020	05/29/15 01:18	
Hexachlorobenzene	ug/L	<0.011	0.10	05/29/15 01:18	
Hexachlorocyclopentadiene	ug/L	<0.032	0.10	05/29/15 01:18	
Methoxychlor	ug/L	<0.014	0.10	05/29/15 01:18	
Metolachlor	ug/L	<0.011	0.10	05/29/15 01:18	
PCB, Total	ug/L	<0.080	0.10	05/29/15 01:18	
Propachlor	ug/L	<0.010	0.10	05/29/15 01:18	
Simazine	ug/L	<0.044	0.070	05/29/15 01:18	
Toxaphene	ug/L	<0.61	1.0	05/29/15 01:18	
Decachlorobiphenyl (S)	%	126	70-130	05/29/15 01:18	

LABORATORY CONTROL SAMPLE: 1223970

Parameter	Units	Spike Conc.	LCS Result	LCS % Rec	% Rec Limits	Qualifiers
Alachlor	ug/L	1	1.2	121	70-130	
Atrazine	ug/L	1.2	1.6	126	70-130	
Butachlor	ug/L	.5	0.55	110	70-130	
Dieldrin	ug/L	.5	0.59	119	70-130	
Endrin	ug/L	.05	0.061	122	70-130	
gamma-BHC (Lindane)	ug/L	.1	0.11	114	70-130	
Heptachlor	ug/L	.2	0.22	112	70-130	
Heptachlor epoxide	ug/L	.1	0.13	127	70-130	
Hexachlorobenzene	ug/L	.5	0.50	100	70-130	
Hexachlorocyclopentadiene	ug/L	.5	0.46	92	70-130	
Methoxychlor	ug/L	.5	0.61	121	70-130	
Metolachlor	ug/L	.5	0.55	110	70-130	
Propachlor	ug/L	.5	0.58	116	70-130	
Simazine	ug/L	.88	1.0	115	70-130	
Decachlorobiphenyl (S)	%			114	70-130	

Results presented on this page are in the units indicated by the "Units" column except where an alternate unit is presented to the right of the result.

REPORT OF LABORATORY ANALYSIS

This report shall not be reproduced, except in full,
without the written consent of Pace Analytical Services, Inc..

Pace Analytical Services, Inc.
8 East Tower Circle
Ormond Beach, FL 32174
(386)672-5668

QUALITY CONTROL DATA

Project: LBG, Inc.
Pace Project No.: 35189601

MATRIX SPIKE & MATRIX SPIKE DUPLICATE: 1224284 1224285

Parameter	Units	35189786002 Result	MS Spike Conc.	MSD Spike Conc.	MS Result	MSD Result	MS % Rec	MSD % Rec	% Rec Limits	RPD	Max RPD	Qual
Alachlor	ug/L	0.035U	2	2	2.3	2.4	117	118	65-135	1	40	P4
Atrazine	ug/L	0.022U	2.5	2.5	2.2	2.4	88	95	65-135	8	40	
Butachlor	ug/L	0.015U	1	1	1.1	1.1	109	113	65-135	4	40	
Dieldrin	ug/L	0.014U	1	1	1.2	1.2	117	116	65-135	2	40	
Endrin	ug/L	0.0020U	.1	.1	0.13	0.13	127	128	65-135	1	40	
gamma-BHC (Lindane)	ug/L	0.0031U	.2	.2	0.23	0.22	115	111	65-135	4	40	
Heptachlor	ug/L	0.0061U	.4	.4	0.46	0.43	114	108	65-135	6	40	
Heptachlor epoxide	ug/L	0.0031U	.2	.2	0.26	0.25	132	125	65-135	5	40	
Hexachlorobenzene	ug/L	0.011U	1	1	1.0	0.96	100	96	65-135	4	40	
Hexachlorocyclopentadiene	ug/L	0.033U	1	1	1.0	0.88	100	88	65-135	13	40	
Methoxychlor	ug/L	0.014U	1	1	1.2	1.2	122	122	65-135	0	40	
Metolachlor	ug/L	0.011U	1	1	1.1	1.1	115	106	65-135	8	40	
Propachlor	ug/L	0.010U	1	1	1.0	1.1	100	106	65-135	7	40	
Simazine	ug/L	0.045U	1.8	1.8	2.3	2.4	130	136	65-135	5	40	M1
Decachlorobiphenyl (S)	%						115	123	70-130		40	

Results presented on this page are in the units indicated by the "Units" column except where an alternate unit is presented to the right of the result.

This report shall not be reproduced, except in full,
without the written consent of Pace Analytical Services, Inc..

Pace Analytical Services, Inc.
8 East Tower Circle
Ormond Beach, FL 32174
(386)672-5668

QUALITY CONTROL DATA

Project: LBG, Inc.
Pace Project No.: 35189601

QC Batch: OEXT/22619
QC Batch Method: EPA 515.3
Analysis Method: EPA 515.3
Analysis Description: 5153 GCS Herbicides
Associated Lab Samples: 35189601001

METHOD BLANK: 1227028
Matrix: Water
Associated Lab Samples: 35189601001

Parameter	Units	Blank Result	Reporting Limit	Analyzed	Qualifiers
2,4,5-TP (Silvex)	ug/L	<0.16	0.20	06/01/15 20:44	
2,4-D	ug/L	<0.081	0.10	06/01/15 20:44	
Dalapon	ug/L	<0.89	1.0	06/01/15 20:44	
Dicamba	ug/L	<0.067	0.10	06/01/15 20:44	
Dinoseb	ug/L	<0.16	0.20	06/01/15 20:44	
Pentachlorophenol	ug/L	<0.030	0.040	06/01/15 20:44	
Picloram	ug/L	<0.094	0.10	06/01/15 20:44	
2,4-DCAA (S)	%	85	70-130	06/01/15 20:44	

LABORATORY CONTROL SAMPLE: 1227029

Parameter	Units	Spike Conc.	LCS Result	LCS % Rec	% Rec Limits	Qualifiers
2,4,5-TP (Silvex)	ug/L	1	0.91	91	70-130	
2,4-D	ug/L	.5	0.54	107	70-130	
Dalapon	ug/L	5	4.1	82	70-130	
Dicamba	ug/L	.5	0.52	103	70-130	
Dinoseb	ug/L	1	0.89	89	70-130	
Pentachlorophenol	ug/L	.2	0.18	88	70-130	
Picloram	ug/L	.5	0.43	86	70-130	
2,4-DCAA (S)	%			82	70-130	

MATRIX SPIKE & MATRIX SPIKE DUPLICATE: 1228488 1228489

Parameter	Units	35189337001 Result	MS Spike Conc.	MSD Spike Conc.	MS Result	MSD Result	MS % Rec	MSD % Rec	% Rec Limits	RPD	Max RPD	Qual
2,4,5-TP (Silvex)	ug/L	<0.16	1	1	0.94	0.87	94	87	70-130	8	40	
2,4-D	ug/L	<0.081	.5	.5	0.52	0.50	104	101	70-130	3	40	
Dalapon	ug/L	<0.89	5	5	4.2	4.0	83	81	70-130	3	40	
Dicamba	ug/L	<0.067	.5	.5	0.51	0.46	103	92	70-130	11	40	
Dinoseb	ug/L	<0.16	1	1	0.89	0.84	89	84	70-130	5	40	
Pentachlorophenol	ug/L	<0.030	.2	.2	0.17	0.17	84	86	70-130	2	40	
Picloram	ug/L	<0.094	.5	.5	0.40	0.40	80	79	70-130	2	40	
2,4-DCAA (S)	%						80	80	70-130			

Results presented on this page are in the units indicated by the "Units" column except where an alternate unit is presented to the right of the result.

REPORT OF LABORATORY ANALYSIS

This report shall not be reproduced, except in full,
without the written consent of Pace Analytical Services, Inc..

Pace Analytical Services, Inc.
8 East Tower Circle
Ormond Beach, FL 32174
(386)672-5668

QUALITY CONTROL DATA

Project: LBG, Inc.
Pace Project No.: 35189601

MATRIX SPIKE & MATRIX SPIKE DUPLICATE: 1228490 1228491

Parameter	Units	35190350001 Result	MS Spike Conc.	MSD Spike Conc.	MS Result	MSD Result	MS % Rec	MSD % Rec	% Rec Limits	RPD	Max RPD	Qual
2,4,5-TP (Silvex)	ug/L	0.16U	1	1	0.81	0.77	81	77	70-130	5	40	
2,4-D	ug/L	0.081U	.5	.5	0.45	0.44	89	87	70-130	3	40	
Dalapon	ug/L	0.89U	5	5	4.3	3.9	85	78	70-130	9	40	
Dicamba	ug/L	0.067U	.5	.5	0.49	0.47	98	93	70-130	5	40	
Dinoseb	ug/L	0.16U	1	1	0.80	0.77	80	77	70-130	4	40	
Pentachlorophenol	ug/L	0.030U	.2	.2	0.16	0.15	82	77	70-130	6	40	
Picloram	ug/L	0.094U	.5	.5	0.43	0.42	86	84	70-130	1	40	
2,4-DCAA (S)	%						76	73	70-130			

Results presented on this page are in the units indicated by the "Units" column except where an alternate unit is presented to the right of the result.

This report shall not be reproduced, except in full,
without the written consent of Pace Analytical Services, Inc..

Pace Analytical Services, Inc.
8 East Tower Circle
Ormond Beach, FL 32174
(386)672-5668

QUALITY CONTROL DATA

Project: LBG, Inc.
Pace Project No.: 35189601

QC Batch: OEXT/22566 | Analysis Method: EPA 525.2
QC Batch Method: EPA 525.2 | Analysis Description: 525.2 Base Neutral Extractables
Associated Lab Samples: 35189601001

METHOD BLANK: 1223971 | Matrix: Water
Associated Lab Samples: 35189601001

Parameter	Units	Blank Result	Reporting Limit	Analyzed	Qualifiers
Aldrin	ug/L	<0.036	0.10	05/28/15 11:03	
Benzo(a)pyrene	ug/L	<0.019	0.10	05/28/15 11:03	
bis(2-Ethylhexyl)adipate	ug/L	<0.38	1.6	05/28/15 11:03	
bis(2-Ethylhexyl)phthalate	ug/L	<0.50	2.0	05/28/15 11:03	
Metribuzin	ug/L	<0.031	0.30	05/28/15 11:03	
1,3-Dimethyl-2-nitrobenzene(S)	%	98	70-130	05/28/15 11:03	
Perylene-d12 (S)	%	88	70-130	05/28/15 11:03	
Triphenylphosphate (S)	%	97	70-130	05/28/15 11:03	

LABORATORY CONTROL SAMPLE: 1223972

Parameter	Units	Spike Conc.	LCS Result	LCS % Rec	% Rec Limits	Qualifiers
Aldrin	ug/L	.4	0.30	75	70-130	
Benzo(a)pyrene	ug/L	.4	0.40	99	70-130	
bis(2-Ethylhexyl)adipate	ug/L	6.4	6.6	103	70-130	
bis(2-Ethylhexyl)phthalate	ug/L	8	8.4	105	70-130	
Metribuzin	ug/L	1.2	1.2	97	70-130	
1,3-Dimethyl-2-nitrobenzene(S)	%			92	70-130	
Perylene-d12 (S)	%			106	70-130	
Triphenylphosphate (S)	%			107	70-130	

MATRIX SPIKE & MATRIX SPIKE DUPLICATE: 1224286 1224287

Parameter	Units	35189845001 Result	MS Spike Conc.	MSD Spike Conc.	MS Result	MSD Result	MS % Rec	MSD % Rec	% Rec Limits	RPD	Max RPD	Qual
Aldrin	ug/L	0.035U	.8	.8	0.87	0.64	109	80	70-130	31	40	
Benzo(a)pyrene	ug/L	0.018U	.8	.8	0.72	0.69	91	86	70-130	5	40	
bis(2-Ethylhexyl)adipate	ug/L	0.37U	12.8	12.8	12.4	12.2	97	96	70-130	1	40	
bis(2-Ethylhexyl)phthalate	ug/L	0.48U	16	16	16.4	16.3	101	100	70-130	0	40	
Metribuzin	ug/L	0.030U	2.4	2.4	2.7	2.5	113	103	70-130	10	40	
1,3-Dimethyl-2-nitrobenzene(S)	%						92	97	70-130			
Perylene-d12 (S)	%						99	96	70-130			
Triphenylphosphate (S)	%						104	101	70-130			

Results presented on this page are in the units indicated by the "Units" column except where an alternate unit is presented to the right of the result.

REPORT OF LABORATORY ANALYSIS

This report shall not be reproduced, except in full,
without the written consent of Pace Analytical Services, Inc..

Pace Analytical Services, Inc.
8 East Tower Circle
Ormond Beach, FL 32174
(386)672-5668

ANALYTICAL RESULTS - RADIOCHEMISTRY

Project: LBG, Inc.
Pace Project No.: 35189601

Sample: 90570-1 **Lab ID: 35189601001** Collected: 05/21/15 11:30 Received: 05/22/15 10:55 Matrix: Drinking Water
PWS: Site ID: Sample Type:

Parameters	Method	Act ± Unc (MDC) Carr Trac	Units	Analyzed	CAS No.	Qual
Radon	SM 7500Rn-B	**3,819 ± 100 (43.9)** **C:NA T:NA**	pCi/L	05/23/15 00:54	10043-92-2	
Gross Alpha	EPA 900.0	**5.32 ± 2.16 (2.93)** **C:NA T:NA**	pCi/L	06/01/15 07:21	12587-46-1	
Gross Beta	EPA 900.0	**2.13U ± 1.14 (2.13)** **C:NA T:NA**	pCi/L	06/01/15 07:21	12587-47-2	
Radium-226	EPA 903.1	**0.672U ± 0.492 (0.672)** **C:NA T:90%**	pCi/L	06/01/15 09:57	13982-63-3	
Radium-228	EPA 904.0	**0.728U ± 0.319 (0.728)** **C:77% T:82%**	pCi/L	06/01/15 13:04	15262-20-1	
Total Uranium	EPA 908.0	**4.85 ± 0.406 (0.345)** **C:NA T:84%**	pCi/L	05/29/15 19:22	7440-61-1	

This report shall not be reproduced, except in full,
without the written consent of Pace Analytical Services, Inc..

Pace Analytical Services, Inc.
8 East Tower Circle
Ormond Beach, FL 32174
(386)672-5668

QUALITY CONTROL - RADIOCHEMISTRY

Project: LBG, Inc.
Pace Project No.: 35189601

QC Batch: RADC/24569 | Analysis Method: EPA 903.1
QC Batch Method: EPA 903.1 | Analysis Description: 903.1 Radium-226
Associated Lab Samples: 35189601001

METHOD BLANK: 898090 | Matrix: Water
Associated Lab Samples:

Parameter	Act ± Unc (MDC) Carr Trac	Units	Analyzed	Qualifiers
Radium-226	0.382 ± 0.499 (0.823) C:NA T:93%	pCi/L	06/01/15 09:25	

Results presented on this page are in the units indicated by the "Units" column except where an alternate unit is presented to the right of the result.

REPORT OF LABORATORY ANALYSIS

This report shall not be reproduced, except in full,
without the written consent of Pace Analytical Services, Inc..

Pace Analytical Services, Inc.
8 East Tower Circle
Ormond Beach, FL 32174
(386)672-5668

QUALITY CONTROL - RADIOCHEMISTRY

Project: LBG, Inc.
Pace Project No.: 35189601

QC Batch: RADC/24551 | Analysis Method: SM 7500Rn-B
QC Batch Method: SM 7500Rn-B | Analysis Description: 7500Rn B Radon
Associated Lab Samples: 35189601001

METHOD BLANK: 897076 | Matrix: Water
Associated Lab Samples:

Parameter	Act ± Unc (MDC) Carr Trac	Units	Analyzed	Qualifiers
Radon	-11.5 ± 18.5 (33.1) C:NA T:NA	pCi/L	05/22/15 22:09	

Results presented on this page are in the units indicated by the "Units" column except where an alternate unit is presented to the right of the result.

This report shall not be reproduced, except in full,
without the written consent of Pace Analytical Services, Inc..

Pace Analytical Services, Inc.
8 East Tower Circle
Ormond Beach, FL 32174
(386)672-5668

QUALITY CONTROL - RADIOCHEMISTRY

Project: LBG, Inc.
Pace Project No.: 35189601

QC Batch: RADC/24578 | Analysis Method: EPA 904.0
QC Batch Method: EPA 904.0 | Analysis Description: 904.0 Radium 228
Associated Lab Samples: 35189601001

METHOD BLANK: 898452 | Matrix: Water
Associated Lab Samples:

Parameter	Act ± Unc (MDC) Carr Trac	Units	Analyzed	Qualifiers
Radium-228	-0.177 ± 0.369 (0.898) C:70% T:80%	pCi/L	06/01/15 12:56	

Results presented on this page are in the units indicated by the "Units" column except where an alternate unit is presented to the right of the result.

This report shall not be reproduced, except in full,
without the written consent of Pace Analytical Services, Inc..

Pace Analytical Services, Inc.
8 East Tower Circle
Ormond Beach, FL 32174
(386)672-5668

QUALITY CONTROL - RADIOCHEMISTRY

Project: LBG, Inc.
Pace Project No.: 35189601

QC Batch: RADC/24608 | Analysis Method: EPA 900.0
QC Batch Method: EPA 900.0 | Analysis Description: 900.0 Gross Alpha/Beta
Associated Lab Samples: 35189601001

METHOD BLANK: 898977 | Matrix: Water
Associated Lab Samples:

Parameter	Act ± Unc (MDC) Carr Trac	Units	Analyzed	Qualifiers
Gross Alpha	-0.841 ± 0.578 (2.12) C:NA T:NA	pCi/L	06/01/15 07:21	
Gross Beta	-0.093 ± 0.680 (1.78) C:NA T:NA	pCi/L	06/01/15 07:21	

Results presented on this page are in the units indicated by the "Units" column except where an alternate unit is presented to the right of the result.

This report shall not be reproduced, except in full,
without the written consent of Pace Analytical Services, Inc..

Pace Analytical Services, Inc.
8 East Tower Circle
Ormond Beach, FL 32174
(386)672-5668

QUALITY CONTROL - RADIOCHEMISTRY

Project: LBG, Inc.
Pace Project No.: 35189601

QC Batch: RADC/24605 | Analysis Method: EPA 908.0
QC Batch Method: EPA 908.0 | Analysis Description: 908.0 Total Uranium
Associated Lab Samples: 35189601001

METHOD BLANK: 898974 | Matrix: Water
Associated Lab Samples:

Parameter	Act ± Unc (MDC) Carr Trac	Units	Analyzed	Qualifiers
Total Uranium	-0.0481 ± 0.204 (0.366) C:NA T:81%	pCi/L	05/29/15 19:22	

Results presented on this page are in the units indicated by the "Units" column except where an alternate unit is presented to the right of the result.

This report shall not be reproduced, except in full,
without the written consent of Pace Analytical Services, Inc..

Pace Analytical Services, Inc.
8 East Tower Circle
Ormond Beach, FL 32174
(386)672-5668

QUALIFIERS

Project: LBG, Inc.
Pace Project No.: 35189601

DEFINITIONS

DF - Dilution Factor, if reported, represents the factor applied to the reported data due to dilution of the sample aliquot.

ND - Not Detected at or above adjusted reporting limit.

J - Estimated concentration above the adjusted method detection limit and below the adjusted reporting limit.

MDL - Adjusted Method Detection Limit.

PQL - Practical Quantitation Limit.

RL - Reporting Limit.

S - Surrogate

1,2-Diphenylhydrazine decomposes to and cannot be separated from Azobenzene using Method 8270. The result for each analyte is a combined concentration.

Consistent with EPA guidelines, unrounded data are displayed and have been used to calculate % recovery and RPD values.

LCS(D) - Laboratory Control Sample (Duplicate)

MS(D) - Matrix Spike (Duplicate)

DUP - Sample Duplicate

RPD - Relative Percent Difference

NC - Not Calculable.

SG - Silica Gel - Clean-Up

U - Indicates the compound was analyzed for, but not detected.

N-Nitrosodiphenylamine decomposes and cannot be separated from Diphenylamine using Method 8270. The result reported for each analyte is a combined concentration.

Act - Activity

Unc - Uncertainty: SDWA = 1.96 sigma count uncertainty, all other matrices = Expanded Uncertainty (95% confidence interval). Gamma Spec = Expanded Uncertainty (95.4% Confidence Interval)

(MDC) - Minimum Detectable Concentration

Trac - Tracer Recovery (%)

Carr - Carrier Recovery (%)

Pace Analytical is TNI accredited. Contact your Pace PM for the current list of accredited analytes.

TNI - The NELAC Institute.

LABORATORIES

PASI-O	Pace Analytical Services - Ormond Beach
PASI-PA	Pace Analytical Services - Greensburg

ANALYTE QUALIFIERS

IS	The internal standard response is below criteria. Results may be biased high.
M1	Matrix spike recovery exceeded QC limits. Batch accepted based on laboratory control sample (LCS) recovery.
P4	Sample field preservation does not meet EPA or method recommendations for this analysis.
S3	Surrogate recovery exceeded laboratory control limits. Analyte presence below reporting limits in associated samples. Results unaffected by high bias.

This report shall not be reproduced, except in full,
without the written consent of Pace Analytical Services, Inc..

Pace Analytical Services, Inc.
8 East Tower Circle
Ormond Beach, FL 32174
(386)672-5668

QUALITY CONTROL DATA CROSS REFERENCE TABLE

Project: LBG, Inc.
Pace Project No.: 35189601

Lab ID	Sample ID	QC Batch Method	QC Batch	Analytical Method	Analytical Batch
35189601001	**90570-1**	EPA 504.1	OEXT/22548	EPA 504.1	GCSV/14695
35189601001	**90570-1**	EPA 508.1	OEXT/22565	EPA 508.1	GCSV/14717
35189601001	**90570-1**	EPA 515.3	OEXT/22619	EPA 515.3	GCSV/14741
35189601001	**90570-1**	EPA 531.1	GCSV/14703		
35189601001	**90570-1**	EPA 525.2	OEXT/22566	EPA 525.2	MSSV/7857
35189601001	**90570-1**	SM 7500Rn-B	RADC/24551		
35189601001	**90570-1**	EPA 900.0	RADC/24608		
35189601001	**90570-1**	EPA 903.1	RADC/24569		
35189601001	**90570-1**	EPA 904.0	RADC/24578		
35189601001	**90570-1**	EPA 908.0	RADC/24605		

This report shall not be reproduced, except in full,
without the written consent of Pace Analytical Services, Inc..

EnviroTest Laboratories, Inc.
315 Fullerton Avenue
Newburgh, NY 12550
Phone (845) 562-0890 Fax (845) 562-0841

Chain of C

WO#: 35189601

35189601

EnviroTest Laboratories Inc.

Client Information (Sub Contract Lab)	Sampler:	Lab PM: Bayer, D	COC No: 420-7603.1
Client Contact: Shipping/Receiving	Phone:	E-Mail: dbayer@	Page: Page 1 of 1
Company: Pace Analytical Ormond Beach			STL Job #: 420-90570-1
Address: 8 East Tower Circle, ,	Due Date Requested: 6/2/2015		
City: Ormond Beach	TAT Requested (days): Std TAT		
State, Zip: FL, 32174			
Phone: 111-222-3333(Tel)	PO #:		
Email:	WO #:		
Project Name: LBG, Inc.	Project #: 42001269		
Site:	SSOW#:		

Analysis Requested

Preservation Codes:

A - HCL, B - NaOH, C - Zn Acetate, D - Nitric Acid, E - NaHSO4, F - MeOH, G - Amchlor, H - Ascorbic Acid, I - Ice, J - DI Water, K - EDTA, L - EDA
M - Hexane, N - None, O - AsNaO2, P - Na2O4S, Q - Na2SO3, R - Na2S2SO3, S - H2SO4, T - TSP Dodecahydrate, U - Acetone, V - MCAA, W - ph 4-5, Z - other (specify)

Other:

Sample Identification Client ID (Lab ID)	Sample Date	Sample Time	Sample Type (C=Comp, G=grab)	Matrix (W=water, S=solid, O=waste/oil, BT=Tissue, A=Air)	Field Filtered Sample (Yes or No)	Perform MS/MSD (Yes or No)	SUBCONTRACT/ 515 Chlorinated Acids	SUBCONTRACT/ 504 EPA 504.1 EDB/DBCP	SUBCONTRACT/ 531.1 Carbamate Pesticides in DW	SUBCONTRACT/ 525.2 Semivolatile Organics	SUBCONTRACT/ 900 GA/GB/RA 226/RA 228 *	SUBCONTRACT/ Total Uranium *	SUBCONTRACT/ Radon *	SUBCONTRACT/ 508					Total Number of containers	Special Instructions/Note:
			Preservation Code:																	
Well 5-5/21 (420-90570-1)	5/21/15	11:30		Water			X	X	X	X	X	X	X	X					7 ~~15~~	* Sent directly to PA

Possible Hazard Identification
☐ Non-Hazard ☐ Flammable ☐ Skin Irritant ☐ Poison B ☐ Unknown ☐ Radiological

Sample Disposal (A fee may be assessed if samples are retained longer than 1 month)
☐ Return To Client ☐ Disposal By Lab ☐ Archive For _____ Months

Deliverable Requested: I, II, III, IV, Other (specify)

Special Instructions/QC Requirements:

Empty Kit Relinquished by:	Date:	Time:		Method of Shipment:	
Relinquished by: C. Marciano	Date/Time: 5/21/15 1630	Company: ETL	Received by:	Date/Time: 5/22/15 10:55	Company: PAEP
Relinquished by:	Date/Time:	Company	Received by:	Date/Time:	Company
Relinquished by:	Date/Time:	Company	Received by:	Date/Time:	Company
Custody Seals Intact: Δ Yes Δ No	Custody Seal No.:		Cooler Temperature(s) °C and Other Remarks: 3.5		

Pace Analytical Florida Laboratory	Document Name: Sample Condition Upon Receipt Form	Document Revised: August 11, 2014
	Document No.: F-FL-C-007 rev. 06	Issuing Authority: Pace Florida Quality Office

Sample Condition Upon Receipt Form (SCUR)

Table Number: _____

Client Name: Enviratest **Project #** 351896001

Courier: ☒ Fed Ex ☐ UPS ☐ USPS ☐ Client ☐ Commercial ☐ Pace ☐ Other _____

Tracking # 7736 5893 5110

Custody Seal on Cooler/Box Present: ☐ yes ☒ no **Seals intact:** ☐ yes ☐ no

Packing Material: ☒ Bubble Wrap ☒ Bubble Bags ☐ None ☐ Other _____

Thermometer Used T165 **Type of Ice:** (Wet) Blue None

Cooler Temperature°C 6.5 **(Visual)** -1.0 **(Correction Factor)** 5.5 **(Actual)**

(Temp should be above freezing to 6°C). If below 0°C, then was sample frozen? ☐Yes ☐No

Date and Initials of person examining contents: JP 5/22/15

JP 5/22/15 10:55

Receipt of samples satisfactory: ☑Yes ☐No **Rush TAT requested on COC:**

If yes, then all conditions below were met:	If no, then mark box & describe issue (use comments area if necessary):
Chain of Custody Present	☐
Chain of Custody Filled Out	☐
Relinquished Signature & Sampler Name COC	☐
Samples Arrived within Hold Time	☐
Sufficient Volume	☐
Correct Containers Used	☐
Containers Intact	☐
Sample Labels match COC (sample IDs & date/time of collection)	☐ No Labels: ☐ No Time/Date on Labels: ☐
All containers needing preservation are found to be in compliance with EPA recommendation.	☐
No Headspace in VOA Vials (>6mm):	☐

Client Notification/ Resolution:

Person Contacted: _____ Date/Time: _____

Comments/ Resolution (use back for additional comments): _____

Project Manager Review: _____ **Date:** 5/22/15

Finished Product Information Only

F.P. Sample ID: _____

Production Code: _____

Date/Time Opened: _____

Number of Unopened Bottles Remaining: _____

Extra Sample in Shed: Yes No

Size & Qty of Bottles Received

_____ x 5 Gal
_____ x 2.5 Gal
_____ x 1 Gal
_____ x 1 Liter
_____ x 500 mL
_____ x 250 mL
_____ x Other: _____

WATER QUALITY

WELL 6

EnviroTest Laboratories Inc.

ANALYTICAL REPORT

Job Number: 420-105965-1

Job Description: LBG, Inc.

For:
Leggette, Brashears & Graham, Inc.
4 Research Drive
Shelton, CT 06464

Attention: Stacy Stieber

Debra Bayer
Customer Service Manager
dbayer@envirotestlaboratories.com

07/23/2016

NYSDOH ELAP does not certify for all parameters. EnviroTest Laboratories does hold certification for all analytes where certification is offered by ELAP unless otherwise specified. Pursuant to NELAP, this report may not be reproduced, except in full, without written approval of the laboratory. EnviroTest Laboratories Inc. certifies that the analytical results contained herein apply only to the samples tested as received by our laboratory. All questions regarding this report should be directed to the EnviroTest Customer Service Representative.

EnviroTest Laboratories, Inc. Certifications and Approvals: NYSDOH 10142, NJDEP NY015, CTDOPH PH-0554

Comments
No additional comments.

Receipt
All samples were received in good condition within temperature requirements.

GC/MS VOA
No analytical or quality issues were noted.

Metals
No analytical or quality issues were noted.

General Chemistry
Method SM 4500 H+ B: The holding time for pH is 15 minutes, the samples were received outside of the holding time.

No other analytical or quality issues were noted.

Biology
No analytical or quality issues were noted.

METHOD SUMMARY

Client: Leggette, Brashears & Graham, Inc. Job Number: 420-105965-1

Description	Lab Location	Method	Preparation Method
Matrix: Water			
ICP Metals by 200.7	EnvTest	EPA 200.7 Rev 4.4	
Sample Filtration	EnvTest		FILTRATION
200 Series Drinking Water Prep Determination Step	EnvTest		EPA 200
Total Metals Digestion for 200.7	EnvTest		EPA 200.7
ICPMS Metals by 200.8	EnvTest	EPA 200.8 Rev.5.4	
200 Series Drinking Water Prep Determination Step	EnvTest		EPA 200
Total Metals Digestion for 200.8	EnvTest		EPA 200.8
Mercury in Water by CVAA	EnvTest	EPA 245.1 Rev.3.0	
Digestion for CVAA Mercury in Waters	EnvTest		EPA 245.1
Anions by Ion Chromatography	EnvTest	MCAWW 300.0	
Anions by Ion Chromatography	EnvTest	EPA 300.0 Rev. 2.1	
EPA 504.1 EDB	Pace	EPA 504.1	
EPA 505 Pesticide/PCB	Pace	EPA 505	
EPA 515 Chlorinated Acids	Pace	EPA 515	
Purgeable Organic Compounds in Water by GC/MS	EnvTest	EPA-DW 524.2	
EPA 525.2 Semivolatile Organics	Pace	EPA 525.2	
EPA 531.1 Carbamate Pesticides in Drinki	Pace	EPA 531.1	
EPA 900 Series GA/GB/RA226/RA228/Gamma	Pace	EPA 900	
Uranium	Pace	STL-STL EPA	
Heterotropic Plate Count	EnvTest	IDEXX SIMPLATE	
Odor, Threshold Test	EnvTest	SM20 SM 2150B	
Alkalinity, Titration Method	EnvTest	SM21 SM 2320B-97,-11	
Corrosivity LSI Calculation	EnvTest	SM20 SM 2330B	
Hardness by Calculation	EnvTest	SM20 SM 2340B-97,-11	
pH	EnvTest	SM19 SM 4500 H+ B	
Nitrite by Colormetric	EnvTest	SM20 SM 4500 NO2 B	
Total Coliform and Escherichia coli by Colilert - Presence/Absence	EnvTest	SMWW SM 9223	
Apparent Color	EnvTest	SM21 SM2120B-01,11	
Turbidity	EnvTest	SM21 SM2130B-01,11	
Total Dissolved Solids (Dried at 180 °C)	EnvTest	SM21 SM2540C-97,11	
Cyanide, Total: Colorimetric Method	EnvTest	SM21 SM4500 CN E-99	
Cyanide: Distillation	EnvTest		SM21 SM 4500 CN C
General Sub Contract Method		Subcontract	
General Sub Contract Method	Pace	Subcontract	

METHOD SUMMARY

Client: Leggette, Brashears & Graham, Inc. Job Number: 420-105965-1

Description	Lab Location	Method	Preparation Method

Lab References:

=

EnvTest = EnviroTest

Pace = Pace Analytical - Ormond Beach

Method References:

EPA = US Environmental Protection Agency

EPA-DW = "Methods For The Determination Of Organic Compounds In Drinking Water", EPA/600/4-88/039, December 1988 And Its Supplements.

IDEXX =

MCAWW = "Methods For Chemical Analysis Of Water And Wastes", EPA-600/4-79-020, March 1983 And Subsequent Revisions.

SM19 = "Standard Methods For The Examination Of Water And Wastewater", 19Th Edition, 1995."

SM20 = "Standard Methods For The Examination Of Water And Wastewater", 20th Edition."

SM21 = "Standard Methods For The Examination Of Water And Wastewater", 21st Edition

SMWW = "Standard Methods for the Examination of Water and Wastewater"

STL-STL = Severn Trent Laboratories, St. Louis, Facility Standard Operating Procedure.

METHOD / ANALYST SUMMARY

Client: Leggette, Brashears & Graham, Inc. Job Number: 420-105965-1

Method	Analyst	Analyst ID
EPA-DW 524.2	Andersen, Eric C	ECA
EPA 200.7 Rev 4.4	Sirico, Derek	DS
EPA 200.8 Rev.5.4	Sirico, Derek	DS
EPA 245.1 Rev.3.0	Sirico, Derek	DS
SM20 SM 2340B-97,-11	Sirico, Derek	DS
MCAWW 300.0	Luis, Carlos	CL
EPA 300.0 Rev. 2.1	Luis, Carlos	CL
IDEXX SIMPLATE	O'Driscoll, Kate	KO
SM20 SM 2150B	O'Driscoll, Kate	KO
SM21 SM 2320B-97,-11	Lerro, Matthew N	MnL
SM20 SM 2330B	Cusack, Renee	RC
SM19 SM 4500 H+ B	O'Driscoll, Kate	KO
SM20 SM 4500 NO2 B	Osborne, Amy	AO
SMWW SM 9223	O'Driscoll, Kate	KO
SM21 SM2120B-01,11	O'Driscoll, Kate	KO
SM21 SM2130B-01,11	O'Driscoll, Kate	KO
SM21 SM2540C-97,11	O'Driscoll, Kate	KO
SM21 SM4500 CN E-99	Osborne, Amy	AO

SAMPLE SUMMARY

Client: Leggette, Brashears & Graham, Inc.

Job Number: 420-105965-1

Lab Sample ID	Client Sample ID	Client Matrix	Date/Time Sampled	Date/Time Received
420-105965-1	Well 6	Water	06/16/2016 1025	06/16/2016 1220

Client: Leggette, Brashears & Graham, Inc. Job Number: 420-105965-1

Client Sample ID: **Well 6**

Lab Sample ID: 420-105965-1 Date Sampled: 06/16/2016 1025
Client Matrix: Water Date Received: 06/16/2016 1220

524.2 Purgeable Organic Compounds in Water by GC/MS

Method: 524.2 Analysis Batch: 420-99239 Instrument ID: Agilent 7890A/5975C
Preparation: N/A Lab File ID: X061617.D
Dilution: 1.0 Initial Weight/Volume: 5 mL
Date Analyzed: 06/16/2016 1634 Final Weight/Volume: 5 mL
Date Prepared: N/A

Analyte	Result (ug/L)	Qualifier	RL
1,1,1,2-Tetrachloroethane	<0.500		0.500
1,1,1-Trichloroethane	<0.500		0.500
1,1,2,2-Tetrachloroethane	<0.500		0.500
1,1,2-Trichloroethane	<0.500		0.500
1,1-Dichloroethane	<0.500		0.500
1,1-Dichloroethene	<0.500		0.500
1,1-Dichloropropene	<0.500		0.500
1,2,3-Trichlorobenzene	<0.500		0.500
1,2,3-Trichloropropane	<0.500		0.500
1,2,4-Trichlorobenzene	<0.500		0.500
1,2,4-Trimethylbenzene	<0.500		0.500
1,2-Dichloroethane	<0.500		0.500
1,2-Dichlorobenzene	<0.500		0.500
1,2-Dichloropropane	<0.500		0.500
1,3-Dichloropropane	<0.500		0.500
1,4-Dichlorobenzene	<0.500		0.500
2,2-Dichloropropane	<0.500		0.500
Benzene	<0.500		0.500
Bromobenzene	<0.500		0.500
Bromochloromethane	<0.500		0.500
Bromomethane	<0.500		0.500
n-Butylbenzene	<0.500		0.500
cis-1,2-Dichloroethene	<0.500		0.500
cis-1,3-Dichloropropene	<0.500		0.500
Carbon tetrachloride	<0.500		0.500
Chlorobenzene	<0.500		0.500
Chloroethane	<0.500		0.500
Chloromethane	<0.500		0.500
Dibromomethane	<0.500		0.500
Ethylbenzene	<0.500		0.500
Dichlorodifluoromethane	<0.500		0.500
Hexachlorobutadiene	<0.500		0.500
Isopropylbenzene	<0.500		0.500
p-Isopropyltoluene	<0.500		0.500
Methylene Chloride	<0.500		0.500
m-Xylene & p-Xylene	<1.00		1.00
Methyl tert-butyl ether	<0.500		0.500
o-Xylene	<0.500		0.500
Tetrachloroethene	<0.500		0.500
Toluene	0.618		0.500
trans-1,2-Dichloroethene	<0.500		0.500
trans-1,3-Dichloropropene	<0.500		0.500
Trichloroethene	<0.500		0.500
tert-Butylbenzene	<0.500		0.500

Client: Leggette, Brashears & Graham, Inc. Job Number: 420-105965-1

Client Sample ID: **Well 6**

Lab Sample ID: 420-105965-1 Date Sampled: 06/16/2016 1025
Client Matrix: Water Date Received: 06/16/2016 1220

524.2 Purgeable Organic Compounds in Water by GC/MS

Method: 524.2 Analysis Batch: 420-99239 Instrument ID: Agilent 7890A/5975C
Preparation: N/A Lab File ID: X061617.D
Dilution: 1.0 Initial Weight/Volume: 5 mL
Date Analyzed: 06/16/2016 1634 Final Weight/Volume: 5 mL
Date Prepared: N/A

Analyte	Result (ug/L)	Qualifier	RL
Trichlorofluoromethane	<0.500		0.500
Vinyl chloride	<0.500		0.500
Xylenes, Total	<1.50		1.50
Styrene	<0.500		0.500
sec-Butylbenzene	<0.500		0.500
1,3,5-Trimethylbenzene	<0.500		0.500
N-Propylbenzene	<0.500		0.500
1,3-Dichlorobenzene	<0.500		0.500
2-Chlorotoluene	<0.500		0.500
4-Chlorotoluene	<0.500		0.500

Surrogate	%Rec	Acceptance Limits
4-Bromofluorobenzene	95	71 - 120
Toluene-d8 (Surr)	103	79 - 121
1,2-Dichloroethane-d4 (Surr)	96	70 - 128

Client: Leggette, Brashears & Graham, Inc.

Job Number: 420-105965-1

Client Sample ID: **Well 6**

Lab Sample ID:	420-105965-1	Date Sampled:	06/16/2016 1025
Client Matrix:	Water	Date Received:	06/16/2016 1220

200.7 Rev 4.4 ICP Metals by 200.7

Method:	200.7 Rev 4.4	Analysis Batch: 420-99630	Instrument ID:	Thermo ICP
Preparation:	200	Prep Batch: 420-99606	Lab File ID:	N/A
Dilution:	1.0		Initial Weight/Volume:	mL
Date Analyzed:	06/28/2016 1512		Final Weight/Volume:	mL
Date Prepared:	06/27/2016 1240			

Analyte	Result (ug/L)	Qualifier	RL
Iron	<60.0		60.0
Manganese	28.5		10.0
Sodium	6770		200
Zinc	<20.0		20.0

200.7 Rev 4.4 ICP Metals by 200.7-Dissolved

Method:	200.7 Rev 4.4	Analysis Batch: 420-99485	Instrument ID:	Thermo ICP
Preparation:	200.7	Prep Batch: 420-99415	Lab File ID:	N/A
Dilution:	1.0		Initial Weight/Volume:	50 mL
Date Analyzed:	06/23/2016 1657		Final Weight/Volume:	50 mL
Date Prepared:	06/21/2016 1700			

Analyte	Result (ug/L)	Qualifier	RL
Iron	<60.0		60.0
Manganese	28.5		10.0

Client: Leggette, Brashears & Graham, Inc. Job Number: 420-105965-1

Client Sample ID: **Well 6**

Lab Sample ID: 420-105965-1 Date Sampled: 06/16/2016 1025
Client Matrix: Water Date Received: 06/16/2016 1220

200.8 Rev.5.4 ICPMS Metals by 200.8

Method:	200.8 Rev.5.4	Analysis Batch: 420-99388	Instrument ID:	Perkin Elmer ELAN
Preparation:	200.8	Prep Batch: 420-99356	Lab File ID:	N/A
Dilution:	1.0		Initial Weight/Volume:	50 mL
Date Analyzed:	06/21/2016 1719		Final Weight/Volume:	50 mL
Date Prepared:	06/17/2016 1530			

Analyte	Result (ug/L)	Qualifier	RL
Silver	<1.00		1.00

Method:	200.8 Rev.5.4	Analysis Batch: 420-99441	Instrument ID:	Perkin Elmer ELAN
Preparation:	200	Prep Batch: 420-99428	Lab File ID:	N/A
Dilution:	1.0		Initial Weight/Volume:	mL
Date Analyzed:	06/23/2016 0233		Final Weight/Volume:	mL
Date Prepared:	06/22/2016 1020			

Analyte	Result (ug/L)	Qualifier	RL
Pb	2.07		1.00
Arsenic	<1.40		1.40
Beryllium	<0.300		0.300
Cadmium	<1.00		1.00
Chromium	<7.00		7.00
Nickel	2.06		0.500
Antimony	<0.400		0.400
Thallium	<0.300		0.300
Barium	8.26		2.00
Selenium	<2.00		2.00

245.1 Rev.3.0 Mercury in Water by CVAA

Method:	245.1 Rev.3.0	Analysis Batch: 420-99521	Instrument ID:	Perkin Elmer FIMS
Preparation:	245.1	Prep Batch: 420-99518	Lab File ID:	N/A
Dilution:	1.0		Initial Weight/Volume:	25 mL
Date Analyzed:	06/24/2016 1617		Final Weight/Volume:	25 mL
Date Prepared:	06/23/2016 1500			

Analyte	Result (ug/L)	Qualifier	RL
Mercury	<0.200		0.200

Client: Leggette, Brashears & Graham, Inc.

Job Number: 420-105965-1

Client Sample ID: **Well 6**

Lab Sample ID: 420-105965-1
Client Matrix: Water

Date Sampled: 06/16/2016 1025
Date Received: 06/16/2016 1220

SM 2340B-97,-11 Hardness by Calculation

Method: SM 2340B-97,-11
Preparation: N/A
Dilution: 1.0
Date Analyzed: 06/28/2016 1512
Date Prepared: N/A

Analysis Batch: 420-99634

Instrument ID: None
Lab File ID: N/A
Initial Weight/Volume:
Final Weight/Volume:

Analyte	Result (mg/L)	Qualifier	RL
Calcium hardness as calcium carbonate	63.5		1.25

Client: Leggette, Brashears & Graham, Inc.

Job Number: 420-105965-1

Biology

Client Sample ID: **Well 6**

Lab Sample ID: 420-105965-1
Client Matrix: Water

Date Sampled: 06/16/2016 1025
Date Received: 06/16/2016 1220

Analyte	Result	Qual	Units	Dil	Method
Coliform, Total	Present	g	CFU/100mL	1.0	SM 9223
Anly Batch: 420-99217	Date Analyzed	06/16/2016 1728			
Escherichia coli	Absent		CFU/100mL	1.0	SM 9223
Anly Batch: 420-99217	Date Analyzed	06/16/2016 1728			

Analyte	Result	Qual	Units	RL	Dil	Method
Heterotrophic Plate Count	68.0		CFU/mL	2.00	1.0	SIMPLATE
Anly Batch: 420-99255	Date Analyzed	06/16/2016 1805				

General Chemistry

Client: Leggette, Brashears & Graham, Inc.

Job Number: 420-105965-1

General Chemistry

Client Sample ID: **Well 6**

Lab Sample ID: 420-105965-1

Client Matrix: Water

Date Sampled: 06/16/2016 1025

Date Received: 06/16/2016 1220

Analyte	Result	Qual	Units	RL	Dil	Method
Nitrate as N	<0.250		mg/L	0.250	1.0	300.0
	Anly Batch: 420-99303	Date Analyzed	06/16/2016 1741			

Analyte	Result	Qual	Units	Dil	Method
Langelier Index	-0.410		NONE	1.0	SM 2330B
	Anly Batch: 420-99680	Date Analyzed	06/30/2016 0830		

Client: Leggette, Brashears & Graham, Inc. Job Number: 420-105965-1

General Chemistry

Client Sample ID: **Well 6**

Lab Sample ID: 420-105965-1 Date Sampled: 06/16/2016 1025
Client Matrix: Water Date Received: 06/16/2016 1220

Analyte	Result	Qual	Units	RL	Dil	Method
Alkalinity	88.2		mg/L	5.00	1.0	SM 2320B-97,-11
Anly Batch: 420-99671	Date Analyzed	06/29/2016 0931				
Total Dissolved Solids	150		mg/L	5.00	1.0	SM2540C-97,11
Anly Batch: 420-99447	Date Analyzed	06/22/2016 1720				
Chloride	3.22		mg/L	1.50	1.0	300.0 Rev. 2.1
Anly Batch: 420-99303	Date Analyzed	06/16/2016 1741				
Sulfate	16.1		mg/L	5.00	1.0	300.0 Rev. 2.1
Anly Batch: 420-99303	Date Analyzed	06/16/2016 1741				
Fluoride	<0.500		mg/L	0.500	1.0	300.0 Rev. 2.1
Anly Batch: 420-99303	Date Analyzed	06/16/2016 1741				
Cyanide, Total	<0.00500		mg/L	0.00500	1.0	SM4500 CN E-99
Anly Batch: 420-99371	Date Analyzed	06/21/2016 1444				
Prep Batch: 420-99232	Date Prepared:	06/17/2016 0830				
Apparent Color	20.0		Pt-Co	2.00	1.0	SM2120B-01,11
Anly Batch: 420-99259	Date Analyzed	06/16/2016 1701				
pH@color measurement	7.59		SU	2.00	1.0	SM2120B-01,11
Anly Batch: 420-99259	Date Analyzed	06/16/2016 1701				
Turbidity	0.260		NTU	0.100	1.0	SM2130B-01,11
Anly Batch: 420-99261	Date Analyzed	06/16/2016 1655				
Odor	1.00		T.O.N.	1.00	1.0	SM 2150B
Anly Batch: 420-99260	Date Analyzed	06/16/2016 1720				
Temp @ Odor Measurement	60.0		Degrees C	5.00	1.0	SM 2150B
Anly Batch: 420-99260	Date Analyzed	06/16/2016 1720				
pH	7.59	H	SU	0.200	1.0	SM 4500 H+ B
Anly Batch: 420-99257	Date Analyzed	06/16/2016 1703				
Temp @ pH Measurement	20.3		Degrees C	5.00	1.0	SM 4500 H+ B
Anly Batch: 420-99257	Date Analyzed	06/16/2016 1703				
Nitrite as N	<0.0100		mg/L	0.0100	1.0	SM 4500 NO2 B
Anly Batch: 420-99238	Date Analyzed	06/16/2016 1645				

DATA REPORTING QUALIFIERS

Client: Leggette, Brashears & Graham, Inc. Job Number:

Lab Section	Qualifier	Description
General Chemistry		
	H	Sample was prepped or analyzed beyond the specified holding time
Biology		
	g	Result fails applicable NYS drinking water standards

Certification Information

Client: Leggette, Brashears & Graham, Inc. Job Number:

The following analytes are Not Part of the ELAP scope of accreditation:

Sulfur, Tungsten, Silicon, Bicarbonate Alkalinity, 7 Day BOD 5210C, 28 Day BOD, Soluble BOD, Carbon Dioxide, carbonate Alkalinity, CBOD Soluble, Chlorine, Cyanide (WAD), Ferrous Iron, Ferric Iron, Total Nitrogen, Total Organic Nitrogen, Dissolved Oxygen, pH, Phenolpthalien Alkalinity, Solids (Fixed), Solids (Percent), Solids (Percent Moisture) , Solids (Percent Volatile), Solids (Volatile Suspended), Temperature, TKN (Soluble), Total Inorganic Carbon, Volatile Acids as Acetic Acid, 2-Aminopyridine, 3-Picoline, 1-Methyl-2-pyrrilidinone, Aziridine, Dimethyl sulfoxide, Fluorobenzene, 1-Chlorohexane, Iron Bacteria, Salmonella, & Sulfur Reducing Bacteria.

The following analytes are Not Part of ELAP Potable Water scope of accreditation:

Cobalt (200.7, 200.8), Tin (200.7), Strontium (200.7), Gold (200.7), Platinium (200.7), Palladium (200.7), Titanium (200.7), Phosphorus (365.3), Nitrate-Nitrite (10-107-4-1C, 353.2), m-Xylene & p-Xylene (502.2, 524), Naphthalene (502.2), o-Xylene (502.2, 524), & Fecal Coliform (9222D).

The following analytes are Not Part of ELAP Solid and Hazardous Waste scope of accreditation:

Ammonia (SM 4500NH3G), Nitrate-Nitrite (353.2, 10-107-4-1C), TKN (351.2), Phosphorus (365.3), Total Cresols (8270), 1,2-Dichloro-1,1,2-trifluoroethane (8260), & Chlorodifluoromethane (8260).

The following analytes are Not Part of ELAP Non Potable Water scope of accreditation:

Dissolved Organic Carbon (5310C), Mecoprop (8151A), & MCPA (8151A).

The following analytes are Part of ELAP scope of accreditation but not for the noted methods:

alpha-Chlordane (608), Endrin Ketone (608), gamma-Chlordane (608), PCB-1262 (608), PCB-1268 (608), 1,2-Diphenylhydrazine (625), 2-MethylNapthalene (625), 3-Methylphenol (625), 4-Nitoaniline (625), 1,1,1,2-Tetrachloroethane (624,601), 1,1,2-Trichloro-1,2,2-trifluoroethane (601,624), 1,2,3-Trichlorobenzene (624, 601), 1,2,3-Trichloropropane (624),1,2,4-Trichlorobenzene (601,624), 1,2,4-trimethylbenzene (624), 1,2-Dichloro-3-Chloropropane (601, 624),1,2-Dichloro-1,1,2-trifluoroethane (601, 624), 1,3,5-Trimethylbenzene (624), 1,3-Dichloropropane (624), 2,2-dichloropropane (601,624), 2-chlorotoluene (601,624), 2-hexanone (624), 4-Chlorotoluene (601,624), 4-Isopropyltoluene (624), Acetonitrile (624), Benzyl Chloride (624, 8021), Bromobenzene (601,624), Carbon disulfide (624), Bromochloromethane (624), Dibromomethane (624), 1,2-Dibromoethane (624), Hexachlorobutadiene (624), Isopropylbenzene (624), 2-Butanone (Methyl Ethyl Ketone) (624), 4-methyl-2-pentanone (624), MTBE (602), m-Xylene & p-Xylene (8021), Naphthalene (602,624), n-Butylbenzene (624), n-Propylbenzene (624), sec-Butylbenzene (624), tert-Butylbenzene (624), trans-1,4-Dichloro-2-butene (624), & Tetrahydrofuran (8260, 624).

Definitions and Glossary

Client: Leggette, Brashears & Graham, Inc. Job Number:

Abbreviation	These commonly used abbreviations may or may not be present in this report.
%R	Percent Recovery
DL, RA, RE	Indicates a Dilution, Reanalysis or Reextraction.
EPA	United States Environmental Protection Agency
MDL	Method Detection Limit - an estimate of the minimum amount of a substance that an analytical process can reliably detect. A MDL is analyte- and matrix-specific and may be laboratory-dependent.
ND	Not detected at the reporting limit (or MDL if shown).
QC	Quality Control
RL	Reporting Limit - the minimum levels, concentrations, or quantities of a target variable (e.g., target analyte) that can be reported with a specified degree of confidence.
RPD	Relative Percent Difference - a measure of the relative difference between two points.

EnviroTest Laboratories, Inc.

CHAIN OF CUSTODY

105965

REPORT# (Lab Use Only)

Lab Name: EnviroTest Laboratories
Address & Phone: 315 Fullerton Avenue, Newburgh, New York 12550 845-562-0890

PROJECT REFERENCE	PROJECT NO.	PROJECT LOCATION
ENVIROTEST PROJECT MANAGER: Debra Bayer	P.O. NUMBER	TOWN
CLIENT (SITE) PM: LBG, Inc.	CLIENT PHONE: 203-929-8555	CLIENT FAX
CLIENT NAME: Stacy Steiber		
CLIENT ADDRESS: 4 Research Drive, Suite 301, Shelton, CT 06484		
COMPANY CONTRACTING THIS WORK (if applicable):		

PAGE 1 of 1

TURNAROUND TIME: NORMAL ✓ ; QUICK ____ ; VERBAL ____

#OF COOLERS: 1

SAMPLE DATE	SAMPLE TIME	SAMPLE IDENTIFICATION	COMPOSITE (C) OR GRAB (G) INDICATE	AQUEOUS (WATER)	D (Drinking Water) or W (Waste Water) Indicate	SOLID OR SEMISOLID	OTHER Specify	MPA C/G kit	40ml Vials HCl	40ml Sodium Thio.	250ml Amber Sodium Thio.	Liter Amber HCl/Na2SO3	250ml Plastic Nitric Acid	40ml Mon/Sod.Thio(liquid)	Liter Plastic	250ml Plastic Sodium Hyd.	125ml Plastic Sterile	Gallon Plastic Nitric	40ml Vials Unpres	REMARKS
6/16/16	1025	Well 6		X				1	3	2	1	2	1	2	4	1	2	1	2	Table 8B (Sb,As,Ba,Be,Cd,Cr,Cn,Hg,Ni
																				Se,Tl,F)
																				Table 8C (NO3,NO2)
								2-Liter Amber Unpres.												Table 8D (Cl,Fe,Mn,Ag,Na,SO4,Zn,Odor,Color)
								1-250ml Amber Unpres.												524.2 (POC,MTBE,Vinyl Chloride)
								3-250ml Plastic Unpres.												SOCs (504,508,515,525,531)
								28 SAMPLE CONTAINERS												Additional Tests (Total coliform
																				thru Zinc)
																				Radio (Gross Alpha/Beta, Radium 226/228,
																				Uranium), Radon
																				Dissolved Fe and Mn
																				MPA to include Crypto/Giardia

NUMBER OF CONTAINERS SUBMITTED

RELINQUISHED BY: (SIGNATURE)	COMPANY	DATE	TIME	RECEIVED BY: (SIGNATURE)	COMPANY	DATE	TIME
[signature]	LBG	6/16/16	12:20				
SAMPLED BY: (SIGNATURE) [signature]	LBG	6/16/16	10:25				
RELINQUISHED BY: (SIGNATURE)							

SUBCONTACT: PACE-SOCs, Radio, Radon; ASI - MPA/C/G #1

RECEIVED FOR LABORATORY BY: (SIGNATURE)	DATE	TIME	CUSTODY INTACT YES NO	Cooler Temp.	LABORATORY REMARKS: ICE ✓ pH____ CL2____ Reveiwed by____
[signature]	6/16/16	1220		13.0	

Analytical Services, Inc.

105965

Page ___ of ___

CHAIN OF CUSTODY RECORD

Ship to: Analytical Services, Inc., 130 Allen Brook Lane, Williston, VT 05495, Attn: Sample Management
Phone: 1-800-723-4432 or 802-878-5138 • Fax: 802-878-6765 *Web site: www.analyticalservices.com*

Submitted By: Brian Morci Leggette Brashears + Graham 4 Research Dr. #204 Shelton, CT 06484 Phone: 203929 8555 Email: bmorci@lbgct.com	Report To: Stacy Stieber LBG ← Same Phone: 2039298555 Email: sstieber@lbgct.com
Project Name: Wild Oaks	Invoice To: ↑
Job Site: Wild Oaks	Same
P.O. Number: N/A	Phone: ___ Email: ___

Sample Identification*	Sample Collection: Date (Start)	Time (Start)	Sampler Initials	Sample Matrix (check one): Water - Raw	Water - Finished	Waste Water	Biosolids	Soil/Sediment	Other	Analysis Requested	Lab Use Only: Temp (°C)
Well 6	6/15/16	15:44		X						MPA	

*Sample ID should match ID written on the sample containers and data sheets. Sample ID will appear on the report for identification.

Relinquished By (signature)	Date/Time	Received By (signature)	Date/Time
[signature]	6/16/16 12:20	Q Elmendorf ETL	6/16/16 122

Field Comments:	Lab Comments:

White – To accompany samples • Yellow – Sampler Copy

ANALYTICAL SERVICES, INC. (ASI)
Microbiological Testing, Research and Consulting

130 Allen Brook Ln., Williston, VT 05495 USA
1.800.723.4432 / 802.878.5138 Fax: 802.878.6765

105965

SAMPLE COLLECTION DATA SHEET
MICROSCOPIC PARTICULATE ANALYSIS (MPA)

NOTE: SAMPLES ARE ACCEPTED MONDAY – THURSDAY ONLY.

Please notify ASI that sampling is taking place, so our lab staff will know when to expect it back for processing.

☒ MPA **with** IFA Staining Procedure for *Giardia/Cryptosporidium* ☐ MPA **without** Staining Procedure for *Giardia/Cryptosporidium*

Client Sample ID:	Well 6
Sample Site:	Wild Oaks
Sampler's Name:	Brian Mocci
Sampling Firm:	LBG, Inc

Water Type:	☒ Raw ☐ Finished ☐ Other _____
Water Source:	☒ Well ☐ Spring ☐ River ☐ Lake/Reservoir ☐ Other
Distance From Nearest Surface Water Source:	40ft ☒ Feet ☐ Yards ☐ Miles

Treatment Chemicals	☐ Chlorine ☐ $KMnO_4$ ☐ Polymer-Type: _____ ☐ Alum ☐ Carbon ☐ Other _____ ☒ None
Filtration Type	☐ Rapid Sand ☐ Mixed media ☐ Slow Sand ☒ None ☐ Pressure filter ☐ Cartridge ☐ Other _____

Sampling Data	Start	End
Time Zone Sample collected in:	(Eastern) Central Mountain Pacific	
Date:	6/15/16	6/16/16
Time (24hr. clock):	15:44	10:13
Turbidity (NTU):	0.00	0.00
pH:		
Meter Reading(Gal/Ft^3)	9093.6	meter stopped working overnight 6gpm over 18hrs 22 min = 1,109 gal

Please filter for 8-24 hours, but do not go over 24 hours; collect between 500-1440 gallons

(1 gallon = 3.785 liters)	Total Volume Sampled: Liters

Sampler's Signature: [signature]

I certify that the above information is correct and that this sample was collected in accordance with the EPA Consensus Method for MPA.

Please call Analytical Services, Inc. Client Services at (800) 723-4432 with questions.

LAB USE ONLY	ASI Sample ID#	

S:\TECHDOCS\DATASHTS\MPA-Sample Collection Data Sht.doc *December 9, 2015*

LOGIN SAMPLE RECEIPT CHECK LIST

Client: Leggette, Brashears & Graham, Inc.

Job Number: 420-105965-1

Login Number: **105965**

Question	T/F/NA	Comment
Samples were collected by ETL employee as per SOP-SAM-1	NA	
The cooler's custody seal, if present, is intact.	NA	
The cooler or samples do not appear to have been compromised or tampered with.	True	
Samples were received on ice.	True	
Cooler Temperature is recorded.	True	
Cooler Temp. is within method specified range.(0-6 C PW, 0-8 C NPW, or BAC <10 C	True	13.0C
If false, was sample received on ice within 6 hours of collection.	False	
Based on above criteria cooler temperature is acceptable.	True	
COC is present.	True	
COC is filled out in ink and legible.	True	
COC is filled out with all pertinent information.	True	
There are no discrepancies between the sample IDs on the containers and the COC.	True	
Samples are received within Holding Time.	True	
Sample containers have legible labels.	True	
Containers are not broken or leaking.	True	
Sample collection date/times are provided.	True	
Appropriate sample containers are used.	True	
Sample bottles are completely filled.	True	
There is sufficient vol. for all requested analyses, incl. any requested MS/MSDs	True	
VOA sample vials do not have headspace or bubble is <6mm (1/4") in diameter.	True	
If necessary, staff have been informed of any short hold time or quick TAT needs	True	
Multiphasic samples are not present.	True	
Samples do not require splitting or compositing.	True	

Pace Analytical Services, Inc.
1638 Roseytown Road - Suites 2,3,4
Greensburg, PA 15601
(724)850-5600

July 15, 2016

Ms. Debra Bayer
EnviroTest Laboratories, Inc.
315 Fullerton Avenue
Newburgh, NY 12550

RE: Project: 42001269
Pace Project No.: 30186725

Dear Ms. Bayer:
Enclosed are the analytical results for sample(s) received by the laboratory on June 17, 2016. The results relate only to the samples included in this report. Results reported herein conform to the most current TNI standards and the laboratory's Quality Assurance Manual, where applicable, unless otherwise noted in the body of the report.

If you have any questions concerning this report, please feel free to contact me.

Sincerely,

Jacquelyn Collins
jacquelyn.collins@pacelabs.com
Project Manager

Enclosures

This report shall not be reproduced, except in full,
without the written consent of Pace Analytical Services, Inc..

Pace Analytical Services, Inc.
1638 Roseytown Road - Suites 2,3,4
Greensburg, PA 15601
(724)850-5600

CERTIFICATIONS

Project: 42001269
Pace Project No.: 30186725

Pennsylvania Certification IDs

1638 Roseytown Rd Suites 2,3&4, Greensburg, PA 15601
L-A-B DOD-ELAP Accreditation #: L2417
Alabama Certification #: 41590
Arizona Certification #: AZ0734
Arkansas Certification
California Certification #: 04222CA
Colorado Certification
Connecticut Certification #: PH-0694
Delaware Certification
Florida/TNI Certification #: E87683
Georgia Certification #: C040
Guam Certification
Hawaii Certification
Idaho Certification
Illinois Certification
Indiana Certification
Iowa Certification #: 391
Kansas/TNI Certification #: E-10358
Kentucky Certification #: 90133
Louisiana DHH/TNI Certification #: LA140008
Louisiana DEQ/TNI Certification #: 4086
Maine Certification #: PA00091
Maryland Certification #: 308
Massachusetts Certification #: M-PA1457
Michigan/PADEP Certification
Missouri Certification #: 235
Montana Certification #: Cert 0082
Nebraska Certification #: NE-05-29-14
Nevada Certification #: PA014572015-1
New Hampshire/TNI Certification #: 2976
New Jersey/TNI Certification #: PA 051
New Mexico Certification #: PA01457
New York/TNI Certification #: 10888
North Carolina Certification #: 42706
North Dakota Certification #: R-190
Oregon/TNI Certification #: PA200002
Pennsylvania/TNI Certification #: 65-00282
Puerto Rico Certification #: PA01457
Rhode Island Certification #: 65-00282
South Dakota Certification
Tennessee Certification #: TN2867
Texas/TNI Certification #: T104704188-14-8
Utah/TNI Certification #: PA014572015-5
USDA Soil Permit #: P330-14-00213
Vermont Dept. of Health: ID# VT-0282
Virgin Island/PADEP Certification
Virginia/VELAP Certification #: 460198
Washington Certification #: C868
West Virginia DEP Certification #: 143
West Virginia DHHR Certification #: 9964C
Wisconsin Certification
Wyoming Certification #: 8TMS-L

This report shall not be reproduced, except in full,
without the written consent of Pace Analytical Services, Inc..

Pace Analytical Services, Inc.
1638 Roseytown Road - Suites 2,3,4
Greensburg, PA 15601
(724)850-5600

SAMPLE SUMMARY

Project: 42001269
Pace Project No.: 30186725

Lab ID	Sample ID	Matrix	Date Collected	Date Received
30186725001	**Well 6 (420-105965-1)**	Drinking Water	06/16/16 10:25	06/17/16 09:30

This report shall not be reproduced, except in full,
without the written consent of Pace Analytical Services, Inc..

Pace Analytical Services, Inc.
1638 Roseytown Road - Suites 2,3,4
Greensburg, PA 15601
(724)850-5600

SAMPLE ANALYTE COUNT

Project: 42001269
Pace Project No.: 30186725

Lab ID	Sample ID	Method	Analysts	Analytes Reported
30186725001	**Well 6 (420-105965-1)**	SM7500RnB-07	NEG	1
		EPA 900.0	NEG	2
		EPA 903.1	WRR	1
		EPA 904.0	JLW	1
		ASTM D5174-97	RMK	1

This report shall not be reproduced, except in full,
without the written consent of Pace Analytical Services, Inc..

Pace Analytical Services, Inc.
1638 Roseytown Road - Suites 2,3,4
Greensburg, PA 15601
(724)850-5600

ANALYTICAL RESULTS - RADIOCHEMISTRY

Project: 42001269
Pace Project No.: 30186725

Sample: Well 6 (420-105965-1) **Lab ID: 30186725001** Collected: 06/16/16 10:25 Received: 06/17/16 09:30 Matrix: Drinking Water
PWS: Site ID: Sample Type:

Comments: • The sampler's name and signature were not listed on the COC.

Parameters	Method	Act ± Unc (MDC) Carr Trac	Units	Analyzed	CAS No.	Qual
Radon	SM7500RnB-07	**2,526 ± 90.4 (50.1)** **C:NA T:NA**	pCi/L	06/18/16 21:53	10043-92-2	
Gross Alpha	EPA 900.0	**2.20 ± 1.55 (2.67)** **C:NA T:NA**	pCi/L	06/28/16 08:21	12587-46-1	
Gross Beta	EPA 900.0	**3.05 ± 1.07 (1.62)** **C:NA T:NA**	pCi/L	06/28/16 08:21	12587-47-2	
Radium-226	EPA 903.1	**0.419 ± 0.433 (0.648)** **C:NA T:92%**	pCi/L	07/11/16 12:21	13982-63-3	
Radium-228	EPA 904.0	**0.307 ± 0.324 (0.683)** **C:75% T:89%**	pCi/L	07/08/16 16:28	15262-20-1	
Total Uranium	ASTM D5174-97	**2.62 ± 0.052 (0.193)** **C:NA T:NA**	ug/L	07/11/16 13:07	7440-61-1	

This report shall not be reproduced, except in full,
without the written consent of Pace Analytical Services, Inc..

Pace Analytical Services, Inc.
1638 Roseytown Road - Suites 2,3,4
Greensburg, PA 15601
(724)850-5600

QUALITY CONTROL - RADIOCHEMISTRY

Project: 42001269
Pace Project No.: 30186725

QC Batch: 224173 | Analysis Method: EPA 904.0
QC Batch Method: EPA 904.0 | Analysis Description: 904.0 Radium 228
Associated Lab Samples: 30186725001

METHOD BLANK: 1096989 | Matrix: Water
Associated Lab Samples: 30186725001

Parameter	Act ± Unc (MDC) Carr Trac	Units	Analyzed	Qualifiers
Radium-228	0.175 ± 0.334 (0.733) C:76% T:91%	pCi/L	07/08/16 16:26	

Results presented on this page are in the units indicated by the "Units" column except where an alternate unit is presented to the right of the result.

This report shall not be reproduced, except in full,
without the written consent of Pace Analytical Services, Inc..

Pace Analytical Services, Inc.
1638 Roseytown Road - Suites 2,3,4
Greensburg, PA 15601
(724)850-5600

QUALITY CONTROL - RADIOCHEMISTRY

Project: 42001269
Pace Project No.: 30186725

QC Batch: 224127
QC Batch Method: ASTM D5174-97
Analysis Method: ASTM D5174-97
Analysis Description: D5174.97 Total Uranium KPA
Associated Lab Samples: 30186725001

METHOD BLANK: 1096887
Matrix: Water
Associated Lab Samples: 30186725001

Parameter	Act ± Unc (MDC) Carr Trac	Units	Analyzed	Qualifiers
Total Uranium	0.035 ± 0.001 (0.193) C:NA T:NA	ug/L	06/29/16 16:46	

Results presented on this page are in the units indicated by the "Units" column except where an alternate unit is presented to the right of the result.

REPORT OF LABORATORY ANALYSIS

This report shall not be reproduced, except in full,
without the written consent of Pace Analytical Services, Inc..

Pace Analytical Services, Inc.
1638 Roseytown Road - Suites 2,3,4
Greensburg, PA 15601
(724)850-5600

QUALITY CONTROL - RADIOCHEMISTRY

Project: 42001269
Pace Project No.: 30186725

QC Batch: 224144 | Analysis Method: EPA 903.1
QC Batch Method: EPA 903.1 | Analysis Description: 903.1 Radium-226
Associated Lab Samples: 30186725001

METHOD BLANK: 1096904 | Matrix: Water
Associated Lab Samples: 30186725001

Parameter	Act ± Unc (MDC) Carr Trac	Units	Analyzed	Qualifiers
Radium-226	0.0619 ± 0.283 (0.168) C:NA T:93%	pCi/L	07/11/16 12:09	

Results presented on this page are in the units indicated by the "Units" column except where an alternate unit is presented to the right of the result.

REPORT OF LABORATORY ANALYSIS

This report shall not be reproduced, except in full,
without the written consent of Pace Analytical Services, Inc..

Pace Analytical Services, Inc.
1638 Roseytown Road - Suites 2,3,4
Greensburg, PA 15601
(724)850-5600

QUALITY CONTROL - RADIOCHEMISTRY

Project: 42001269
Pace Project No.: 30186725

QC Batch: 223561 | Analysis Method: SM7500RnB-07
QC Batch Method: SM7500RnB-07 | Analysis Description: 7500Rn B Radon
Associated Lab Samples: 30186725001

METHOD BLANK: 1093883 | Matrix: Water
Associated Lab Samples: 30186725001

Parameter	Act ± Unc (MDC) Carr Trac	Units	Analyzed	Qualifiers
Radon	6.7 ± 18.6 (32.0) C:NA T:NA	pCi/L	06/18/16 14:41	

Results presented on this page are in the units indicated by the "Units" column except where an alternate unit is presented to the right of the result.

This report shall not be reproduced, except in full,
without the written consent of Pace Analytical Services, Inc..

Pace Analytical Services, Inc.
1638 Roseytown Road - Suites 2,3,4
Greensburg, PA 15601
(724)850-5600

QUALITY CONTROL - RADIOCHEMISTRY

Project: 42001269
Pace Project No.: 30186725

QC Batch: 224282
QC Batch Method: EPA 900.0
Analysis Method: EPA 900.0
Analysis Description: 900.0 Gross Alpha/Beta
Associated Lab Samples: 30186725001

METHOD BLANK: 1097728
Matrix: Water
Associated Lab Samples: 30186725001

Parameter	Act ± Unc (MDC) Carr Trac	Units	Analyzed	Qualifiers
Gross Alpha	-0.132 ± 0.505 (1.56) C:NA T:NA	pCi/L	06/28/16 08:20	
Gross Beta	-0.218 ± 0.624 (1.66) C:NA T:NA	pCi/L	06/28/16 08:20	

Results presented on this page are in the units indicated by the "Units" column except where an alternate unit is presented to the right of the result.

This report shall not be reproduced, except in full,
without the written consent of Pace Analytical Services, Inc..

Pace Analytical Services, Inc.
1638 Roseytown Road - Suites 2,3,4
Greensburg, PA 15601
(724)850-5600

QUALIFIERS

Project: 42001269
Pace Project No.: 30186725

DEFINITIONS

DF - Dilution Factor, if reported, represents the factor applied to the reported data due to dilution of the sample aliquot.

ND - Not Detected at or above adjusted reporting limit.

J - Estimated concentration above the adjusted method detection limit and below the adjusted reporting limit.

MDL - Adjusted Method Detection Limit.

PQL - Practical Quantitation Limit.

RL - Reporting Limit.

S - Surrogate

1,2-Diphenylhydrazine decomposes to and cannot be separated from Azobenzene using Method 8270. The result for each analyte is a combined concentration.

Consistent with EPA guidelines, unrounded data are displayed and have been used to calculate % recovery and RPD values.

LCS(D) - Laboratory Control Sample (Duplicate)

MS(D) - Matrix Spike (Duplicate)

DUP - Sample Duplicate

RPD - Relative Percent Difference

NC - Not Calculable.

SG - Silica Gel - Clean-Up

U - Indicates the compound was analyzed for, but not detected.

N-Nitrosodiphenylamine decomposes and cannot be separated from Diphenylamine using Method 8270. The result reported for each analyte is a combined concentration.

Act - Activity

Unc - Uncertainty: SDWA = 1.96 sigma count uncertainty, all other matrices = Expanded Uncertainty (95% confidence interval). Gamma Spec = Expanded Uncertainty (95.4% Confidence Interval)

(MDC) - Minimum Detectable Concentration

Trac - Tracer Recovery (%)

Carr - Carrier Recovery (%)

Pace Analytical is TNI accredited. Contact your Pace PM for the current list of accredited analytes.

TNI - The NELAC Institute.

This report shall not be reproduced, except in full,
without the written consent of Pace Analytical Services, Inc..

EnviroTest Laboratories, Inc.
315 Fullerton Avenue
Newburgh, NY 12550
Phone (845) 562-0890 Fax (845) 562-0841

Chain of Custody

WO#: 30186725

EnviroTest Laboratories Inc.

Client Information (Sub Contract Lab)	Sampler:	Lab PM: Bayer, Debra	08.1
Client Contact: Shipping/Receiving	Phone:	E-Mail: dbayer@envirotestlaboratories.com	Page: Page 1 of 1
Company: Pace Analytical Ormond Beach			STL Job #: 420-105965-1
Address: ~~8 East Tower Circle,~~ 1638 Roseytown Rd	Due Date Requested: ~~6/28/2016~~ Std TAT D3		
City: ~~Ormond Beach~~ Suite 2,3+4	TAT Requested (days):		
State, Zip: ~~FL, 32174~~ Greensburg PA			
Phone: 111-222-3333(Tel)	PO #:		
Email: 6/16/16 D3	WO #:		
Project Name: LBG, Inc.	Project #: 42001269		
Site:	SSOW#:		

Analysis Requested

Sample Identification Client ID (Lab ID)	Sample Date	Sample Time	Sample Type (C=comp, G=grab)	Matrix (W=water, S=solid, O=waste/oil, BT=Tissue, A=Air)	Field Filtered Sample (Yes or No)	Perform MS/MSD (Yes or No)	SUBCONTRACT/ 515-Chlorinated Acids	SUBCONTRACT/ 504.1-EDB/DBCP	SUBCONTRACT/ 531.1-Carbamate Pesticides in DW	SUBCONTRACT/ 525.2-Semivolatile Organics	SUBCONTRACT/ 900 GA/GB/RA 226/RA 228	SUBCONTRACT/ Total Uranium	SUBCONTRACT/ Radon	SUBCONTRACT/ 508	SUBCONTRACT/ 547	SUBCONTRACT/ 548	SUBCONTRACT/ 549	SUBCONTRACT/ Dioxin	6/16/16 D3	Total Number of containers	Special Instructions/Note:
			Preservation Code:																		
Well 6 (420-105965-1)	6/16/16	10:25		Water			X	X	X	X	X	X	X	X	X	X	X	X		10	001
																					* SDCs Sent to Florida

Preservation Codes:

A - HCL	M - Hexane
B - NaOH	N - None
C - Zn Acetate	O - AsNaO2
D - Nitric Acid	P - Na2O4S
E - NaHSO4	Q - Na2SO3
F - MeOH	R - Na2S2SO3
G - Amchlor	S - H2SO4
H - Ascorbic Acid	T - TSP Dodecahydrate
I - Ice	U - Acetone
J - DI Water	V - MCAA
K - EDTA	W - ph 4-5
L - EDA	Z - other (specify)

Other:

Possible Hazard Identification
☐ Non-Hazard ☐ Flammable ☐ Skin Irritant ☐ Poison B ☐ Unknown ☐ Radiological

Sample Disposal (A fee may be assessed if samples are retained longer than 1 month)
☐ Return To Client ☐ Disposal By Lab ☐ Archive For _____ Months

Deliverable Requested: I, II, III, IV, Other (specify)

Special Instructions/QC Requirements:

Empty Kit Relinquished by:	Date:	Time:	Method of Shipment:		
Relinquished by: A Elmendorf	Date/Time: 6-16-16 1400	Company: ETL	Received by: Ben Mountain	Date/Time: 6-17-16 9:50	Company
Relinquished by:	Date/Time:	Company	Received by:	Date/Time:	Company
Relinquished by:	Date/Time:	Company	Received by:	Date/Time:	Company
Custody Seals Intact: Δ Yes Δ No	Custody Seal No.:		Cooler Temperature(s) °C and Other Remarks:		

Sample Condition Upon Receipt Pittsburgh

Pace Analytical

Client Name: Envirotest Project # 30186725

Courier: ☑ Fed Ex ☐ UPS ☐ USPS ☐ Client ☐ Commercial ☐ Pace Other _____

Tracking #: 7765 3950 4485

Custody Seal on Cooler/Box Present: ☐ yes ☑ no Seals intact: ☐ yes ☐ no

Thermometer Used E Type of Ice: (Wet) Blue None

Cooler Temperature Observed Temp 3.9 °C Correction Factor: +0.1 °C Final Temp: 4.0 °C

Temp should be above freezing to 6°C

Date and Initials of person examining contents: BLM 6-17-16

Comments:	Yes	No	N/A	
Chain of Custody Present:	✓			1.
Chain of Custody Filled Out:	✓			2.
Chain of Custody Relinquished:	✓			3.
Sampler Name & Signature on COC:		✓		4.
Sample Labels match COC: -Includes date/time/ID/Analysis Matrix: WT	✓			5.
Samples Arrived within Hold Time:	✓			6.
Short Hold Time Analysis (<72hr remaining):	✓			7.
Rush Turn Around Time Requested:		✓		8.
Sufficient Volume:	✓			9.
Correct Containers Used:	✓			10.
-Pace Containers Used:		✓		
Containers Intact:	✓			11.
Filtered volume received for Dissolved tests			✓	12.
All containers needing preservation have been checked.	✓			13. PH<2
All containers needing preservation are found to be in compliance with EPA recommendation.	✓			
exceptions: VOA, coliform, TOC, O&G, Phenolics				Initial when completed BLM / Date/time of preservation / Lot # of added preservative
Headspace in VOA Vials (>6mm):		✓		14.
Trip Blank Present:		✓		15.
Trip Blank Custody Seals Present			✓	

Client Notification/ Resolution:

Person Contacted: _____ Date/Time: _____ Contacted By: _____

Comments/ Resolution: _____

Note: Whenever there is a discrepancy affecting North Carolina compliance samples, a copy of this form will be sent to the North Carolina DEHNR Certification Office (i.e out of hold, incorrect preservative, out of temp, incorrect containers)

ANALYTICAL SERVICES, INC. (ASI)
Microbiological Testing, Research and Consulting

130 Allen Brook Ln., Williston, VT 05495 USA
1.800.723.4432 / 802.878.5138 Fax: 802.878.6765
www.analyticalservices.com

July 22, 2016

Ron Bayer
EnviroTest Laboratories
315 Fullerton Ave.
Newburgh, NY 12550

Dear Ron:

Enclosed please find the results of the Microscopic Particulate Analysis (MPA) performed on the sample received in our laboratory on June 17, 2016. As requested, we also analyzed the sample for *Giardia* and *Cryptosporidium*, and those results are also enclosed.

Please note that the MPA slide examination was subcontracted to CHD.

Thank you for using Analytical Services Inc. for your testing needs. If you have any questions or if we may be of service in the future, please do not hesitate to contact us at (800) 723-4432.

Sincerely,

ANALYTICAL SERVICES, INC.

Carolyn M. Fogg

Carolyn M. Fogg
Technical Director

CMF/cmf

ASI Project No.: 54102

ANALYSIS FOR WATERBORNE PARTICULATES

Invoice 20160563

CH Diagnostic and Consulting Service, Inc.
512 5th Street, Berthoud, CO 80513
P: (970) 532-2078 F: (970) 532-3358

Customer 20081756
Analytical Services, Inc.
130 Allen Brook Lane
Williston, VT 05495

Laboratory Information
Federal Express; 6/23/2016; 1050 Hrs; 12.2°C; Packed pellet
Results submitted by:
Rhonda Duncan
Laboratory Director 7/15/16

Sample Identification: 54102-01

Sample Information:

Sample Date & Time: 6/22/2016 **Sampler:** unrec.

Amount: 2098.8 L **Filter Color:** N/A **Filter Type:**

Date/Time Eluted: **Centrifugate:** N/A

RESULTS OF MICROSCOPIC PARTICULATE ANALYSIS

Amount of sample assayed: 250 L

Amorphous Debris	clay (1-2 µm), silt (2-50 µm), sand (50-2000 µm), inorganic precipitate, aggregates
Algae	ND
Diatoms	ND
Plant debris	ND
Rotifers	ND
Nematodes	ND
Pollen (pine)	ND
Ameba	ND
Ciliates	ND
Colorless Flagellates	ND
Crustaceans	ND
Other Arthropods	ND
Other	ND

Giardia and Coccidia are none detected (ND) by MPA unless reported under "Other".
This sample was analyzed for particulates following the Environmental Protection Agency Consensus Method for Determining Groundwaters Under the Direct Influence of Surface Water Using Microscopic Particulate Analysis (MPA). 1992. USEPA, Port Orchard, WA, EPA 910/9-92-029. All limitations stated in the methods apply. If HV capsule or foam filter was received, method was modified by filtering sample through a Pall Envirochek™ HV capsule or IDEXX Filta-Max™ filter at the sample site. If *Giardia* and *Cryptosporidium* Analysis was also performed, particulate extraction was modified.

COMMENTS: Score: 0-Low Risk per EPA Consensus Method referenced above.
Date Analyzed: 6/30/2016
Amount Analyzed at 100x: 251.855 L
Amount Analyzed at 400x: 0.39 L (based on 10 random field counts)

ANALYTICAL SERVICES, INC.
Microbiological Testing, Research and Consulting

Client: EnviroTest Laboratories
Address: 315 Fullerton Ave.
Newburgh, NY 12550
Client Sample ID: Well 6

Sampling Date: June 16, 2016
Date Received: June 17, 2016
Analyst: DG
ASI Sample No.: 54102-01

Section III.

Giardia and *Cryptosporidium*

Analytical Result	Analyte	Numbers/2.1x10^3 L	Number/ 100 L
Giardia	Empty *Giardia* cysts detected	ND	<0.05
	Giardia Cysts with Amorphous Structure detected	ND	<0.05
	Giardia Cysts with one Internal Structure detected	ND	<0.05
	Giardia Cysts with more than one Internal Structure detected	ND	<0.05
	Total IFA *Giardia* Count	ND	<0.05
Cryptosporidium	Empty *Cryptosporidium* Oocysts detected	ND	<0.05
	Cryptosporidium Oocysts with Amorphous Structure detected	ND	<0.05
	Cryptosporidium Oocysts with Internal Structure detected	ND	<0.05
	Total IFA *Cryptosporidium* Count	ND	<0.05

ND = None Detected

An aliquot of the MPA sample concentrate was purified, stained and examined using a modified version of Method 1623: *Cryptosporidium* and *Giardia* in Water by Filtration/IMS/IFA (EPA-821-R-01-025). This method employs immunomagnetic separation to purify the sample, and an immunofluorescent dual monoclonal antibody stain that is specific for *Giardia* and *Cryptosporidium*. Positive and negative controls were stained and examined concurrently. Numbers are reported using significant figures.

Analytical Services, Inc.

Page ___ of ___

CHAIN OF CUSTODY RECORD

Ship to: Analytical Services, Inc., 130 Allen Brook Lane, Williston, VT 05495, Attn: Sample Management
Phone: 1-800-723-4432 or 802-878-5138 • Fax: 802-878-6765 *Web site: www.analyticalservices.com*

Submitted By: Brian Morci Leggette Brashears + Graham 4 Research Dr. #204 Shelton, CT 06484 Phone: 2039298555 Email: bmorci@lbgct.com	Report To: Stacy Stieber LBG ← Same Phone: 2039298555 Email: sstieber@lbgct.com
Project Name: Wild Oaks	Invoice To: ↑
Job Site: Wild Oaks	Same
P.O. Number: N/A	Phone: ___ Email: ___

Sample Identification*	Sample Collection Date (Start)	Time (Start)	Sampler Initials	Sample Matrix (check one): Water - Raw	Water - Finished	Waste Water	Biosolids	Soil/Sediment	Other	Analysis Requested	Lab Use Only Temp (°C)
Well 6	6/15/16	15:44		X						MPA	7.6

*Sample ID should match ID written on the sample containers and data sheets. Sample ID will appear on the report for identification.

Relinquished By (signature)	Date/Time	Received By (signature)	Date/Time
[signature]	6/16/16 12:20	[signature] ETL	6/16/16 122
		[signature]	6/17/16 1015

Field Comments:

Lab Comments:

White – To accompany samples • Yellow – Sampler Copy

EnviroTest Laboratories, Inc.
315 Fullerton Avenue
Newburgh, NY 12550
Phone (845) 562-0890 Fax (845) 562-0841

Chain of Custody Record

EnviroTest Laboratories Inc.

Client Information (Sub Contract Lab)	Sampler:	Lab PM: Bayer, Debra	Carrier Tracking No(s):	COC No: 420-8209.1
Client Contact: Shipping/Receiving	Phone:	E-Mail: dbayer@envirotestlaboratories.com		Page: Page 1 of 1
Company: Analytical Services, Inc				STL Job #: 420-105965-1
Address: 130 Allen Brook Lane,	Due Date Requested: ~~6/28/2016~~ Std TAT			
City: Williston	TAT Requested (days):			
State, Zip: VT, 05495				
Phone:	PO #:			
Email:	WO #:			
Project Name: LBG, Inc.	Project #: 42001269			
Site:	SSOW#:			

Analysis Requested

Preservation Codes:

A - HCL, B - NaOH, C - Zn Acetate, D - Nitric Acid, E - NaHSO4, F - MeOH, G - Amchlor, H - Ascorbic Acid, I - Ice, J - DI Water, K - EDTA, L - EDA, M - Hexane, N - None, O - AsNaO2, P - Na2O4S, Q - Na2SO3, R - Na2S2SO3, S - H2SO4, T - TSP Dodecahydrate, U - Acetone, V - MCAA, W - ph 4-5, Z - other (specify)

Other:

Sample Identification Client ID (Lab ID)	Sample Date	Sample Time	Sample Type (C=comp, G=grab)	Matrix (W=water, S=solid, O=waste/oil, BT=Tissue, A=Air)	Field Filtered Sample (Yes or No)	Perform MS/MSD (Yes or No)	SUBCONTRACT/ MPA	SUBCONTRACT/ Crypto & Giardia	Total Number of containers	Special Instructions/Note:
Well 6 (420-105965-1)	6/16/16	10:25		Water			X	X	1	7.6°C

Possible Hazard Identification
☐ Non-Hazard ☐ Flammable ☐ Skin Irritant ☐ Poison B ☐ Unknown ☐ Radiological

Sample Disposal (A fee may be assessed if samples are retained longer than 1 month)
☐ Return To Client ☐ Disposal By Lab ☐ Archive For _____ Months

Deliverable Requested: I, II, III, IV, Other (specify)

Special Instructions/QC Requirements:

Empty Kit Relinquished by:	Date:	Time:	Method of Shipment:		
Relinquished by: [signature]	Date/Time: 6/16/16 15:00	Company: ENV-	Received by: [signature]	Date/Time: 6/17/16 1015	Company: ASI
Relinquished by:	Date/Time:	Company	Received by:	Date/Time:	Company
Relinquished by:	Date/Time:	Company	Received by:	Date/Time:	Company

Custody Seals Intact: Δ Yes Δ No | Custody Seal No.: | Cooler Temperature(s) °C and Other Remarks:

Pace Analytical Services, Inc.
8 East Tower Circle
Ormond Beach, FL 32174
(386)672-5668

July 08, 2016

Ron Bayer
EnviroTest Laboratories Inc.
315 Fullerton Avenue
Newburgh, NY 12550

RE: Project: LBG, Inc.42001269
Pace Project No.: 35250055

Dear Ron Bayer:
Enclosed are the analytical results for sample(s) received by the laboratory on June 17, 2016. The results relate only to the samples included in this report. Results reported herein conform to the most current TNI standards and the laboratory's Quality Assurance Manual, where applicable, unless otherwise noted in the body of the report.

If you have any questions concerning this report, please feel free to contact me.

Sincerely,

Bo Garcia
bo.garcia@pacelabs.com
Project Manager

Enclosures

cc: Debra Bayer, EnviroTest Laboratories Inc.
Renee Cusack, EnviroTest Laboratories Inc.
Joyce Esposito, EnviroTest Laboratories Inc.
Janine Rader, EnviroTest Laboratories Inc.
Meredith Ruthven, EnviroTest Laboratories Inc.

REPORT OF LABORATORY ANALYSIS

This report shall not be reproduced, except in full,
without the written consent of Pace Analytical Services, Inc..

Pace Analytical Services, Inc.
8 East Tower Circle
Ormond Beach, FL 32174
(386)672-5668

CERTIFICATIONS

Project: LBG, Inc.42001269
Pace Project No.: 35250055

Ormond Beach Certification IDs

8 East Tower Circle, Ormond Beach, FL 32174
Alabama Certification #: 41320
Connecticut Certification #: PH-0216
Delaware Certification: FL NELAC Reciprocity
Florida Certification #: E83079
Georgia Certification #: 955
Guam Certification: FL NELAC Reciprocity
Hawaii Certification: FL NELAC Reciprocity
Illinois Certification #: 200068
Indiana Certification: FL NELAC Reciprocity
Kansas Certification #: E-10383
Louisiana Certification #: FL NELAC Reciprocity
Louisiana Environmental Certificate #: 05007
Maryland Certification: #346
Michigan Certification #: 9911
Mississippi Certification: FL NELAC Reciprocity
Missouri Certification #: 236
Montana Certification #: Cert 0074
Nebraska Certification: NE-OS-28-14
Nevada Certification: FL NELAC Reciprocity
New York Certification #: 11608
North Carolina Environmental Certificate #: 667
North Carolina Certification #: 12710
North Dakota Certification #: R-216
Oklahoma Certification #: D9947
Pennsylvania Certification #: 68-00547
Puerto Rico Certification #: FL01264
South Carolina Certification: #96042001
Tennessee Certification #: TN02974
Texas Certification: FL NELAC Reciprocity
US Virgin Islands Certification: FL NELAC Reciprocity
Virginia Environmental Certification #: 460165
Wyoming Certification: FL NELAC Reciprocity
West Virginia Certification #: 9962C
Wisconsin Certification #: 399079670
Wyoming (EPA Region 8): FL NELAC Reciprocity

This report shall not be reproduced, except in full,
without the written consent of Pace Analytical Services, Inc..

Pace Analytical Services, Inc.
8 East Tower Circle
Ormond Beach, FL 32174
(386)672-5668

SAMPLE SUMMARY

Project: LBG, Inc.42001269
Pace Project No.: 35250055

Lab ID	Sample ID	Matrix	Date Collected	Date Received
35250055001	**(420-105965-1)**	Drinking Water	06/16/16 10:25	06/17/16 10:45

This report shall not be reproduced, except in full,
without the written consent of Pace Analytical Services, Inc..

Pace Analytical Services, Inc.
8 East Tower Circle
Ormond Beach, FL 32174
(386)672-5668

SAMPLE ANALYTE COUNT

Project: LBG, Inc.42001269
Pace Project No.: 35250055

Lab ID	Sample ID	Method	Analysts	Analytes Reported	Laboratory
35250055001	**(420-105965-1)**	EPA 504.1	SMH	2	PASI-O
		EPA 508.1	JTJ	18	PASI-O
		EPA 515.3	LJM	8	PASI-O
		EPA 531.1	CRT	9	PASI-O
		EPA 525.2	JTJ	8	PASI-O

This report shall not be reproduced, except in full,
without the written consent of Pace Analytical Services, Inc..

Pace Analytical Services, Inc.
8 East Tower Circle
Ormond Beach, FL 32174
(386)672-5668

ANALYTICAL RESULTS

Project: LBG, Inc.42001269
Pace Project No.: 35250055

Sample: (420-105965-1) **Lab ID: 35250055001** Collected: 06/16/16 10:25 Received: 06/17/16 10:45 Matrix: Drinking Water

Parameters	Results	Units	PQL	MDL	DF	Prepared	Analyzed	CAS No.	Qual
504.1 GCS EDB and DBCP	Analytical Method: EPA 504.1 Preparation Method: EPA 504.1								
1,2-Dibromo-3-chloropropane	**<0.0049**	ug/L	0.020	0.0049	1	06/23/16 16:00	06/24/16 02:50	96-12-8	
1,2-Dibromoethane (EDB)	**<0.0075**	ug/L	0.010	0.0075	1	06/23/16 16:00	06/24/16 02:50	106-93-4	
508.1 GCS Pesticides	Analytical Method: EPA 508.1 Preparation Method: EPA 508.1								
Alachlor	**<0.033**	ug/L	0.19	0.033	1	06/23/16 08:30	06/29/16 07:38	15972-60-8	
Atrazine	**<0.060**	ug/L	0.094	0.060	1	06/23/16 08:30	06/29/16 07:38	1912-24-9	
gamma-BHC (Lindane)	**<0.0028**	ug/L	0.019	0.0028	1	06/23/16 08:30	06/29/16 07:38	58-89-9	
Butachlor	**<0.026**	ug/L	0.094	0.026	1	06/23/16 08:30	06/29/16 07:38	23184-66-9	
Chlordane (Technical)	**<0.044**	ug/L	0.19	0.044	1	06/23/16 08:30	06/29/16 07:38	57-74-9	
Dieldrin	**<0.018**	ug/L	0.094	0.018	1	06/23/16 08:30	06/29/16 07:38	60-57-1	
Endrin	**<0.0066**	ug/L	0.0094	0.0066	1	06/23/16 08:30	06/29/16 07:38	72-20-8	
Heptachlor	**<0.011**	ug/L	0.038	0.011	1	06/23/16 08:30	06/29/16 07:38	76-44-8	
Heptachlor epoxide	**<0.0028**	ug/L	0.019	0.0028	1	06/23/16 08:30	06/29/16 07:38	1024-57-3	
Hexachlorobenzene	**<0.018**	ug/L	0.094	0.018	1	06/23/16 08:30	06/29/16 07:38	118-74-1	
Hexachlorocyclopentadiene	**<0.030**	ug/L	0.094	0.030	1	06/23/16 08:30	06/29/16 07:38	77-47-4	
Methoxychlor	**<0.048**	ug/L	0.094	0.048	1	06/23/16 08:30	06/29/16 07:38	72-43-5	
Metolachlor	**<0.044**	ug/L	0.094	0.044	1	06/23/16 08:30	06/29/16 07:38	51218-45-2	
PCB, Total	**<0.076**	ug/L	0.094	0.076	1	06/23/16 08:30	06/29/16 07:38	1336-36-3	
Propachlor	**<0.028**	ug/L	0.094	0.028	1	06/23/16 08:30	06/29/16 07:38	1918-16-7	
Simazine	**<0.065**	ug/L	0.066	0.065	1	06/23/16 08:30	06/29/16 07:38	122-34-9	
Toxaphene	**<0.57**	ug/L	0.94	0.57	1	06/23/16 08:30	06/29/16 07:38	8001-35-2	
Surrogates									
Decachlorobiphenyl (S)	76	%	70-130		1	06/23/16 08:30	06/29/16 07:38	2051-24-3	
515.3 Chlorinated Herbicides	Analytical Method: EPA 515.3 Preparation Method: EPA 515.3								
2,4-D	**<0.081**	ug/L	0.10	0.081	1	06/22/16 08:00	06/24/16 22:59	94-75-7	
Dalapon	**<0.89**	ug/L	1.0	0.89	1	06/22/16 08:00	06/24/16 22:59	75-99-0	
Dicamba	**<0.067**	ug/L	0.10	0.067	1	06/22/16 08:00	06/24/16 22:59	1918-00-9	
Dinoseb	**<0.16**	ug/L	0.20	0.16	1	06/22/16 08:00	06/24/16 22:59	88-85-7	
Pentachlorophenol	**<0.030**	ug/L	0.040	0.030	1	06/22/16 08:00	06/24/16 22:59	87-86-5	
Picloram	**<0.094**	ug/L	0.10	0.094	1	06/22/16 08:00	06/24/16 22:59	1918-02-1	
2,4,5-TP (Silvex)	**<0.16**	ug/L	0.20	0.16	1	06/22/16 08:00	06/24/16 22:59	93-72-1	
Surrogates									
2,4-DCAA (S)	92	%	70-130		1	06/22/16 08:00	06/24/16 22:59	19719-28-9	
531.1 HPLC Carbamates	Analytical Method: EPA 531.1								
Aldicarb	**<0.64**	ug/L	2.0	0.64	1		06/22/16 15:48	116-06-3	
Aldicarb sulfone	**<0.37**	ug/L	2.0	0.37	1		06/22/16 15:48	1646-88-4	
Aldicarb sulfoxide	**<0.30**	ug/L	2.0	0.30	1		06/22/16 15:48	1646-87-3	
Carbofuran	**<0.32**	ug/L	2.0	0.32	1		06/22/16 15:48	1563-66-2	
3-Hydroxycarbofuran	**<0.42**	ug/L	2.0	0.42	1		06/22/16 15:48	16655-82-6	
Methomyl	**<0.57**	ug/L	2.0	0.57	1		06/22/16 15:48	16752-77-5	
Oxamyl	**<0.55**	ug/L	2.0	0.55	1		06/22/16 15:48	23135-22-0	
Carbaryl	**<0.20**	ug/L	2.0	0.20	1		06/22/16 15:48	63-25-2	
Surrogates									
BDMC (S)	105	%	80-120		1		06/22/16 15:48		P4

This report shall not be reproduced, except in full,
without the written consent of Pace Analytical Services, Inc..

Pace Analytical Services, Inc.
8 East Tower Circle
Ormond Beach, FL 32174
(386)672-5668

ANALYTICAL RESULTS

Project: LBG, Inc.42001269
Pace Project No.: 35250055

Sample: (420-105965-1) **Lab ID: 35250055001** Collected: 06/16/16 10:25 Received: 06/17/16 10:45 Matrix: Drinking Water

Parameters	Results	Units	PQL	MDL	DF	Prepared	Analyzed	CAS No.	Qual
525.2 Base Neutral Extractable	Analytical Method: EPA 525.2 Preparation Method: EPA 525.2								
Aldrin	**<0.064**	ug/L	0.094	0.064	1	06/23/16 08:30	06/27/16 19:52	309-00-2	
Benzo(a)pyrene	**<0.012**	ug/L	0.094	0.012	1	06/23/16 08:30	06/27/16 19:52	50-32-8	
bis(2-Ethylhexyl)adipate	**<0.36**	ug/L	1.5	0.36	1	06/23/16 08:30	06/27/16 19:52	103-23-1	
bis(2-Ethylhexyl)phthalate	**<0.53**	ug/L	1.9	0.53	1	06/23/16 08:30	06/27/16 19:52	117-81-7	
Metribuzin	**<0.14**	ug/L	0.28	0.14	1	06/23/16 08:30	06/27/16 19:52	21087-64-9	
Surrogates									
1,3-Dimethyl-2-nitrobenzene(S)	111	%	70-130		1	06/23/16 08:30	06/27/16 19:52	81209	
Perylene-d12 (S)	100	%	70-130		1	06/23/16 08:30	06/27/16 19:52	1520963	
Triphenylphosphate (S)	140	%	70-130		1	06/23/16 08:30	06/27/16 19:52	115-86-6	S3

This report shall not be reproduced, except in full,
without the written consent of Pace Analytical Services, Inc..

Pace Analytical Services, Inc.
8 East Tower Circle
Ormond Beach, FL 32174
(386)672-5668

QUALITY CONTROL DATA

Project: LBG, Inc.42001269
Pace Project No.: 35250055

QC Batch: GCSV/18716 | Analysis Method: EPA 531.1
QC Batch Method: EPA 531.1 | Analysis Description: 531.1 HPLC Carbamate
Associated Lab Samples: 35250055001

METHOD BLANK: 1614340 | Matrix: Water
Associated Lab Samples: 35250055001

Parameter	Units	Blank Result	Reporting Limit	MDL	Analyzed	Qualifiers
3-Hydroxycarbofuran	ug/L	<0.42	2.0	0.42	06/22/16 07:28	
Aldicarb	ug/L	<0.64	2.0	0.64	06/22/16 07:28	
Aldicarb sulfone	ug/L	<0.37	2.0	0.37	06/22/16 07:28	
Aldicarb sulfoxide	ug/L	<0.30	2.0	0.30	06/22/16 07:28	
Carbaryl	ug/L	<0.20	2.0	0.20	06/22/16 07:28	
Carbofuran	ug/L	<0.32	2.0	0.32	06/22/16 07:28	
Methomyl	ug/L	<0.57	2.0	0.57	06/22/16 07:28	
Oxamyl	ug/L	<0.55	2.0	0.55	06/22/16 07:28	
BDMC (S)	%	94	80-120		06/22/16 07:28	

LABORATORY CONTROL SAMPLE: 1614341

Parameter	Units	Spike Conc.	LCS Result	LCS % Rec	% Rec Limits	Qualifiers
3-Hydroxycarbofuran	ug/L	10	9.2	92	80-120	
Aldicarb	ug/L	10	9.8	98	80-120	
Aldicarb sulfone	ug/L	10	9.1	91	80-120	
Aldicarb sulfoxide	ug/L	10	9.0	90	80-120	
Carbaryl	ug/L	10	9.0	90	80-120	
Carbofuran	ug/L	10	9.2	92	80-120	
Methomyl	ug/L	10	8.3	83	80-120	
Oxamyl	ug/L	10	8.7	87	80-120	
BDMC (S)	%			95	80-120	

MATRIX SPIKE & MATRIX SPIKE DUPLICATE: 1614342 1614343

Parameter	Units	92301541007 Result	MS Spike Conc.	MSD Spike Conc.	MS Result	MSD Result	MS % Rec	MSD % Rec	% Rec Limits	RPD	Max RPD	Qual
3-Hydroxycarbofuran	ug/L	ND	10	10	10.1	10.5	101	105	80-120	4	20	
Aldicarb	ug/L	ND	10	10	10.4	10.9	104	109	80-120	4	20	
Aldicarb sulfone	ug/L	ND	10	10	13.7	10.3	137	103	80-120	29	20	M1,R1
Aldicarb sulfoxide	ug/L	ND	10	10	14.5	10.2	145	102	80-120	35	20	M1,R1
Carbaryl	ug/L	ND	10	10	9.9	10.1	99	101	80-120	2	20	
Carbofuran	ug/L	ND	10	10	10.2	10.5	102	105	80-120	3	20	
Methomyl	ug/L	ND	10	10	11.1	10.1	111	101	80-120	10	20	
Oxamyl	ug/L	ND	10	10	13.4	10.3	134	103	80-120	26	20	M1,R1
BDMC (S)	%						97	109	80-120			

Results presented on this page are in the units indicated by the "Units" column except where an alternate unit is presented to the right of the result.

REPORT OF LABORATORY ANALYSIS

This report shall not be reproduced, except in full,
without the written consent of Pace Analytical Services, Inc..

Pace Analytical Services, Inc.
8 East Tower Circle
Ormond Beach, FL 32174
(386)672-5668

QUALITY CONTROL DATA

Project: LBG, Inc.42001269
Pace Project No.: 35250055

QC Batch: OEXT/28748 | Analysis Method: EPA 504.1
QC Batch Method: EPA 504.1 | Analysis Description: 504 EDB DBCP
Associated Lab Samples: 35250055001

METHOD BLANK: 1615650 | Matrix: Water
Associated Lab Samples: 35250055001

Parameter	Units	Blank Result	Reporting Limit	MDL	Analyzed	Qualifiers
1,2-Dibromo-3-chloropropane	ug/L	<0.0049	0.020	0.0049	06/23/16 21:31	
1,2-Dibromoethane (EDB)	ug/L	<0.0075	0.010	0.0075	06/23/16 21:31	

LABORATORY CONTROL SAMPLE & LCSD: 1615651 1616509

Parameter	Units	Spike Conc.	LCS Result	LCSD Result	LCS % Rec	LCSD % Rec	% Rec Limits	RPD	Max RPD	Qualifiers
1,2-Dibromo-3-chloropropane	ug/L	.25	0.27	0.24	107	98	70-130	10	40	
1,2-Dibromoethane (EDB)	ug/L	.25	0.26	0.24	106	97	70-130	9	40	

MATRIX SPIKE & MATRIX SPIKE DUPLICATE: 1616511 1616512

Parameter	Units	35250590001 Result	MS Spike Conc.	MSD Spike Conc.	MS Result	MSD Result	MS % Rec	MSD % Rec	% Rec Limits	RPD	Max RPD	Qual
1,2-Dibromo-3-chloropropane	ug/L	0.0049U	.44	.44	0.53	0.58	121	132	65-135	9	40	
1,2-Dibromoethane (EDB)	ug/L	0.0075U	.44	.44	0.50	0.54	113	124	65-135	9	40	

Results presented on this page are in the units indicated by the "Units" column except where an alternate unit is presented to the right of the result.

REPORT OF LABORATORY ANALYSIS

This report shall not be reproduced, except in full,
without the written consent of Pace Analytical Services, Inc..

Pace Analytical Services, Inc.
8 East Tower Circle
Ormond Beach, FL 32174
(386)672-5668

QUALITY CONTROL DATA

Project: LBG, Inc.42001269
Pace Project No.: 35250055

QC Batch: OEXT/28737 | Analysis Method: EPA 508.1
QC Batch Method: EPA 508.1 | Analysis Description: 508 GCS Pesticide
Associated Lab Samples: 35250055001

METHOD BLANK: 1615618 | Matrix: Water
Associated Lab Samples: 35250055001

Parameter	Units	Blank Result	Reporting Limit	MDL	Analyzed	Qualifiers
Alachlor	ug/L	<0.035	0.20	0.035	06/28/16 23:45	
Atrazine	ug/L	<0.063	0.10	0.063	06/28/16 23:45	
Butachlor	ug/L	<0.027	0.10	0.027	06/28/16 23:45	
Chlordane (Technical)	ug/L	<0.047	0.20	0.047	06/28/16 23:45	
Dieldrin	ug/L	<0.019	0.10	0.019	06/28/16 23:45	
Endrin	ug/L	<0.0070	0.010	0.0070	06/28/16 23:45	
gamma-BHC (Lindane)	ug/L	<0.0030	0.020	0.0030	06/28/16 23:45	
Heptachlor	ug/L	<0.012	0.040	0.012	06/28/16 23:45	
Heptachlor epoxide	ug/L	<0.0030	0.020	0.0030	06/28/16 23:45	
Hexachlorobenzene	ug/L	<0.019	0.10	0.019	06/28/16 23:45	
Hexachlorocyclopentadiene	ug/L	<0.032	0.10	0.032	06/28/16 23:45	
Methoxychlor	ug/L	<0.051	0.10	0.051	06/28/16 23:45	
Metolachlor	ug/L	<0.047	0.10	0.047	06/28/16 23:45	
Propachlor	ug/L	<0.030	0.10	0.030	06/28/16 23:45	
Simazine	ug/L	<0.069	0.070	0.069	06/28/16 23:45	
Toxaphene	ug/L	<0.61	1.0	0.61	06/28/16 23:45	
Decachlorobiphenyl (S)	%	57	70-130		06/28/16 23:45	S0

LABORATORY CONTROL SAMPLE: 1615619

Parameter	Units	Spike Conc.	LCS Result	LCS % Rec	% Rec Limits	Qualifiers
Alachlor	ug/L	1	0.85	85	70-130	
Atrazine	ug/L	1.2	1.1	89	70-130	
Butachlor	ug/L	.5	0.46	92	70-130	
Dieldrin	ug/L	.5	0.44	88	70-130	
Endrin	ug/L	.05	0.044	87	70-130	
gamma-BHC (Lindane)	ug/L	.1	0.080	80	70-130	
Heptachlor	ug/L	.2	0.16	78	70-130	
Heptachlor epoxide	ug/L	.1	0.088	88	70-130	
Hexachlorobenzene	ug/L	.5	0.42	83	70-130	
Hexachlorocyclopentadiene	ug/L	.5	0.36	71	70-130	
Methoxychlor	ug/L	.5	0.46	93	70-130	
Metolachlor	ug/L	.5	0.45	91	70-130	
Propachlor	ug/L	.5	0.41	82	70-130	
Simazine	ug/L	.88	0.77	88	70-130	
Decachlorobiphenyl (S)	%			76	70-130	

Results presented on this page are in the units indicated by the "Units" column except where an alternate unit is presented to the right of the result.

REPORT OF LABORATORY ANALYSIS

This report shall not be reproduced, except in full,
without the written consent of Pace Analytical Services, Inc..

Pace Analytical Services, Inc.
8 East Tower Circle
Ormond Beach, FL 32174
(386)672-5668

QUALITY CONTROL DATA

Project: LBG, Inc.42001269
Pace Project No.: 35250055

MATRIX SPIKE & MATRIX SPIKE DUPLICATE: 1615883 1615884

Parameter	Units	35250015003 Result	MS Spike Conc.	MSD Spike Conc.	MS Result	MSD Result	MS % Rec	MSD % Rec	% Rec Limits	RPD	Max RPD	Qual
Alachlor	ug/L	<0.034	2	2	1.6	1.6	81	80	65-135	1	40	
Atrazine	ug/L	<0.061	2.5	2.5	2.1	2.0	84	81	65-135	3	40	
Butachlor	ug/L	<0.026	1	1	0.82	0.82	82	82	65-135	1	40	
Dieldrin	ug/L	<0.018	1	1	0.79	0.79	79	79	65-135	0	40	
Endrin	ug/L	<0.0068	.1	.1	0.077	0.074	77	74	65-135	5	40	
gamma-BHC (Lindane)	ug/L	<0.0029	.2	.2	0.15	0.15	77	77	65-135	0	40	
Heptachlor	ug/L	<0.012	.4	.4	0.30	0.30	74	74	65-135	0	40	
Heptachlor epoxide	ug/L	<0.0029	.2	.2	0.16	0.16	82	82	65-135	0	40	
Hexachlorobenzene	ug/L	<0.018	1	1	0.91	1.0	91	104	65-135	14	40	
Hexachlorocyclopentadiene	ug/L	<0.031	1	1	0.73	0.72	73	72	65-135	1	40	
Methoxychlor	ug/L	<0.049	1	1	0.82	0.82	82	82	65-135	1	40	
Metolachlor	ug/L	<0.045	1	1	0.88	0.87	88	87	65-135	1	40	
Propachlor	ug/L	<0.029	1	1	0.92	1.1	92	113	65-135	21	40	
Simazine	ug/L	<0.067	1.8	1.8	1.7	1.6	99	93	65-135	6	40	
Decachlorobiphenyl (S)	%						61	62	70-130		40	S0

Results presented on this page are in the units indicated by the "Units" column except where an alternate unit is presented to the right of the result.

REPORT OF LABORATORY ANALYSIS

This report shall not be reproduced, except in full,
without the written consent of Pace Analytical Services, Inc..

Pace Analytical Services, Inc.
8 East Tower Circle
Ormond Beach, FL 32174
(386)672-5668

QUALITY CONTROL DATA

Project: LBG, Inc.42001269
Pace Project No.: 35250055

QC Batch: OEXT/28722 | Analysis Method: EPA 515.3
QC Batch Method: EPA 515.3 | Analysis Description: 5153 GCS Herbicides
Associated Lab Samples: 35250055001

METHOD BLANK: 1614141 | Matrix: Water
Associated Lab Samples: 35250055001

Parameter	Units	Blank Result	Reporting Limit	MDL	Analyzed	Qualifiers
2,4,5-TP (Silvex)	ug/L	<0.16	0.20	0.16	06/24/16 13:42	
2,4-D	ug/L	<0.081	0.10	0.081	06/24/16 13:42	
Dalapon	ug/L	<0.89	1.0	0.89	06/24/16 13:42	
Dicamba	ug/L	<0.067	0.10	0.067	06/24/16 13:42	
Dinoseb	ug/L	<0.16	0.20	0.16	06/24/16 13:42	
Pentachlorophenol	ug/L	<0.030	0.040	0.030	06/24/16 13:42	
Picloram	ug/L	<0.094	0.10	0.094	06/24/16 13:42	
2,4-DCAA (S)	%	103	70-130		06/24/16 13:42	

LABORATORY CONTROL SAMPLE: 1614142

Parameter	Units	Spike Conc.	LCS Result	LCS % Rec	% Rec Limits	Qualifiers
2,4,5-TP (Silvex)	ug/L	1	1.0	104	70-130	
2,4-D	ug/L	.5	0.46	92	70-130	
Dalapon	ug/L	5	5.2	104	70-130	
Dicamba	ug/L	.5	0.49	97	70-130	
Dinoseb	ug/L	1	1.0	101	70-130	
Pentachlorophenol	ug/L	.2	0.20	102	70-130	
Picloram	ug/L	.5	0.57	114	70-130	
2,4-DCAA (S)	%			96	70-130	

MATRIX SPIKE & MATRIX SPIKE DUPLICATE: 1614451 1614452

Parameter	Units	92299913001 Result	MS Spike Conc.	MSD Spike Conc.	MS Result	MSD Result	MS % Rec	MSD % Rec	% Rec Limits	RPD	Max RPD	Qual
2,4,5-TP (Silvex)	ug/L	ND	1	1	1.0	1.0	104	103	70-130	0	40	
2,4-D	ug/L	ND	.5	.5	0.50	0.52	100	104	70-130	4	40	
Dalapon	ug/L	ND	5	5	4.9	4.8	99	96	70-130	3	40	
Dicamba	ug/L	ND	.5	.5	0.54	0.52	107	105	70-130	2	40	
Dinoseb	ug/L	ND	1	1	1.0	1.0	100	102	70-130	2	40	
Pentachlorophenol	ug/L	ND	.2	.2	0.20	0.20	98	97	70-130	1	40	
Picloram	ug/L	ND	.5	.5	0.53	0.63	106	125	70-130	17	40	
2,4-DCAA (S)	%						95	94	70-130			

Results presented on this page are in the units indicated by the "Units" column except where an alternate unit is presented to the right of the result.

REPORT OF LABORATORY ANALYSIS

This report shall not be reproduced, except in full,
without the written consent of Pace Analytical Services, Inc..

Pace Analytical Services, Inc.
8 East Tower Circle
Ormond Beach, FL 32174
(386)672-5668

QUALITY CONTROL DATA

Project: LBG, Inc.42001269
Pace Project No.: 35250055

MATRIX SPIKE & MATRIX SPIKE DUPLICATE: 1614453 1614454

Parameter	Units	35250200002 Result	MS Spike Conc.	MSD Spike Conc.	MS Result	MSD Result	MS % Rec	MSD % Rec	% Rec Limits	RPD	Max RPD	Qual
2,4,5-TP (Silvex)	ug/L	<0.16	1	1	0.90	0.92	90	92	70-130	2	40	
2,4-D	ug/L	<0.081	.5	.5	0.45	0.46	90	91	70-130	1	40	
Dalapon	ug/L	<0.89	5	5	4.9	4.9	98	99	70-130	1	40	
Dicamba	ug/L	<0.067	.5	.5	0.54	0.52	108	104	70-130	4	40	
Dinoseb	ug/L	<0.16	1	1	1.0	1.0	100	103	70-130	2	40	
Pentachlorophenol	ug/L	<0.030	.2	.2	0.20	0.20	96	99	70-130	2	40	
Picloram	ug/L	<0.094	.5	.5	0.53	0.53	107	107	70-130	0	40	
2,4-DCAA (S)	%						91	88	70-130			

Results presented on this page are in the units indicated by the "Units" column except where an alternate unit is presented to the right of the result.

This report shall not be reproduced, except in full,
without the written consent of Pace Analytical Services, Inc..

Pace Analytical Services, Inc.
8 East Tower Circle
Ormond Beach, FL 32174
(386)672-5668

QUALITY CONTROL DATA

Project: LBG, Inc.42001269
Pace Project No.: 35250055

QC Batch: OEXT/28738 | Analysis Method: EPA 525.2
QC Batch Method: EPA 525.2 | Analysis Description: 525.2 Base Neutral Extractables
Associated Lab Samples: 35250055001

METHOD BLANK: 1615620 | Matrix: Water
Associated Lab Samples: 35250055001

Parameter	Units	Blank Result	Reporting Limit	MDL	Analyzed	Qualifiers
Aldrin	ug/L	<0.068	0.10	0.068	06/24/16 00:26	
Benzo(a)pyrene	ug/L	<0.013	0.10	0.013	06/24/16 00:26	
bis(2-Ethylhexyl)adipate	ug/L	<0.38	1.6	0.38	06/24/16 00:26	
bis(2-Ethylhexyl)phthalate	ug/L	<0.56	2.0	0.56	06/24/16 00:26	
Metribuzin	ug/L	<0.15	0.30	0.15	06/24/16 00:26	
1,3-Dimethyl-2-nitrobenzene(S)	%	111	70-130		06/24/16 00:26	
Perylene-d12 (S)	%	102	70-130		06/24/16 00:26	
Triphenylphosphate (S)	%	123	70-130		06/24/16 00:26	

LABORATORY CONTROL SAMPLE: 1615621

Parameter	Units	Spike Conc.	LCS Result	LCS % Rec	% Rec Limits	Qualifiers
Aldrin	ug/L	.4	0.34	85	70-130	
Benzo(a)pyrene	ug/L	.4	0.34	84	70-130	
bis(2-Ethylhexyl)adipate	ug/L	6.4	5.5	85	70-130	
bis(2-Ethylhexyl)phthalate	ug/L	8	6.2	78	70-130	
Metribuzin	ug/L	1.2	0.95	79	70-130	
1,3-Dimethyl-2-nitrobenzene(S)	%			106	70-130	
Perylene-d12 (S)	%			103	70-130	
Triphenylphosphate (S)	%			115	70-130	

MATRIX SPIKE & MATRIX SPIKE DUPLICATE: 1615885 1615886

Parameter	Units	35250015001 Result	MS Spike Conc.	MSD Spike Conc.	MS Result	MSD Result	MS % Rec	MSD % Rec	% Rec Limits	RPD	Max RPD	Qual
Aldrin	ug/L	<0.065	.8	.8	0.70	0.79	87	98	70-130	12	40	
Benzo(a)pyrene	ug/L	<0.012	.8	.8	0.72	0.81	90	101	70-130	11	40	
bis(2-Ethylhexyl)adipate	ug/L	<0.37	12.8	12.8	11.0	10.9	86	85	70-130	1	40	
bis(2-Ethylhexyl)phthalate	ug/L	<0.53	16	16	14.2	13.5	86	82	70-130	5	40	
Metribuzin	ug/L	<0.14	2.4	2.4	2.2	2.2	93	92	70-130	1	40	
1,3-Dimethyl-2-nitrobenzene(S)	%						103	105	70-130			
Perylene-d12 (S)	%						102	103	70-130			
Triphenylphosphate (S)	%						126	119	70-130			

Results presented on this page are in the units indicated by the "Units" column except where an alternate unit is presented to the right of the result.

This report shall not be reproduced, except in full,
without the written consent of Pace Analytical Services, Inc..

Pace Analytical Services, Inc.
8 East Tower Circle
Ormond Beach, FL 32174
(386)672-5668

QUALIFIERS

Project: LBG, Inc.42001269
Pace Project No.: 35250055

DEFINITIONS

DF - Dilution Factor, if reported, represents the factor applied to the reported data due to dilution of the sample aliquot.

ND - Not Detected at or above adjusted reporting limit.

J - Estimated concentration above the adjusted method detection limit and below the adjusted reporting limit.

MDL - Adjusted Method Detection Limit.

PQL - Practical Quantitation Limit.

RL - Reporting Limit.

S - Surrogate

1,2-Diphenylhydrazine decomposes to and cannot be separated from Azobenzene using Method 8270. The result for each analyte is a combined concentration.

Consistent with EPA guidelines, unrounded data are displayed and have been used to calculate % recovery and RPD values.

LCS(D) - Laboratory Control Sample (Duplicate)

MS(D) - Matrix Spike (Duplicate)

DUP - Sample Duplicate

RPD - Relative Percent Difference

NC - Not Calculable.

SG - Silica Gel - Clean-Up

U - Indicates the compound was analyzed for, but not detected.

N-Nitrosodiphenylamine decomposes and cannot be separated from Diphenylamine using Method 8270. The result reported for each analyte is a combined concentration.

Pace Analytical is TNI accredited. Contact your Pace PM for the current list of accredited analytes.

TNI - The NELAC Institute.

LABORATORIES

PASI-O	Pace Analytical Services - Ormond Beach

ANALYTE QUALIFIERS

M1	Matrix spike recovery exceeded QC limits. Batch accepted based on laboratory control sample (LCS) recovery.
P4	Sample field preservation does not meet EPA or method recommendations for this analysis.
R1	RPD value was outside control limits.
S0	Surrogate recovery outside laboratory control limits.
S3	Surrogate recovery exceeded laboratory control limits. Analyte presence below reporting limits in associated samples. Results unaffected by high bias.

This report shall not be reproduced, except in full,
without the written consent of Pace Analytical Services, Inc..

Pace Analytical Services, Inc.
8 East Tower Circle
Ormond Beach, FL 32174
(386)672-5668

QUALITY CONTROL DATA CROSS REFERENCE TABLE

Project: LBG, Inc.42001269
Pace Project No.: 35250055

Lab ID	Sample ID	QC Batch Method	QC Batch	Analytical Method	Analytical Batch
35250055001	**(420-105965-1)**	EPA 504.1	OEXT/28748	EPA 504.1	GCSV/18736
35250055001	**(420-105965-1)**	EPA 508.1	OEXT/28737	EPA 508.1	GCSV/18737
35250055001	**(420-105965-1)**	EPA 515.3	OEXT/28722	EPA 515.3	GCSV/18728
35250055001	**(420-105965-1)**	EPA 531.1	GCSV/18716		
35250055001	**(420-105965-1)**	EPA 525.2	OEXT/28738	EPA 525.2	MSSV/10063

This report shall not be reproduced, except in full,
without the written consent of Pace Analytical Services, Inc..

EnviroTest Laboratories, Inc.
315 Fullerton Avenue
Newburgh, NY 12550
Phone (845) 562-0890 Fax (845) 562-0841

WO# : 35250055

35250055

n of Custody Record

EnviroTest Laboratories Inc.

Client Information (Sub Contract Lab)

Client Contact: Shipping/Receiving
Phone:
Company: Pace Analytical Ormond Beach
Address: 8 East Tower Circle, ,
City: Ormond Beach
State, Zip: FL, 32174
Phone: 111-222-3333(Tel)
Email:
Project Name: LBG, Inc.
Site:

Due Date Requested: 6/28/2016
TAT Requested (days):
PO #:
WO #:
Project #: 42001269
SSOW#:

Lab PM: Bayer, Debra
E-Mail: dbayer@envirotestlaboratories.com
Carrier Tracking No(s):

COC No: 420-8208.1
Page: Page 1 of 1
STL Job #: 420-105965-1

Analysis Requested

Sample Identification Client ID (Lab ID)	Sample Date	Sample Time	Sample Type (C=comp, G=grab)	Matrix (W=water, S=solid, O=waste/oil, BT=Tissue, A=Air)	Field Filtered Sample (Yes or No)	Perform MS/MSD (Yes or No)	SUBCONTRACT/ 515 Chlorinated Acids	SUBCONTRACT/ 504 EPA 504.1 EDB/DBCP	SUBCONTRACT/ 531.1 Carbamate Pesticides in DW	SUBCONTRACT/ 525.2 Semivolatile Organics	~~SUBCONTRACT/ 900 GA/GB/RA-226/RA-228~~	SUBCONTRACT/ Total Uranium	SUBCONTRACT/ Radon	SUBCONTRACT/ 508	~~SUBCONTRACT/ 547~~	~~SUBCONTRACT/ 548~~	~~SUBCONTRACT/ 549~~	SUBCONTRACT/ Dioxin		Total Number of containers
			Preservation Code:																	
Well 6 (420-105965-1)	6/16/16	10:25		Water			X	X	X	X	X	X	X	X	X	X	X	X		10

Preservation Codes:

A - HCL
B - NaOH
C - Zn Acetate
D - Nitric Acid
E - NaHSO4
F - MeOH
G - Amchlor
H - Ascorbic Acid
I - Ice
J - DI Water
K - EDTA
L - EDA
M - Hexane
N - None
O - AsNaO2
P - Na2O4S
Q - Na2SO3
R - Na2S2SO3
S - H2SO4
T - TSP Dodecahydrate
U - Acetone
V - MCAA
W - ph 4-5
Z - other (specify)

Other:

Special Instructions/Note:

* Radio + Radon
Sent to PA
NO 547, 548
549 Dioxin
6/16/16
DB

Possible Hazard Identification
☐ Non-Hazard ☐ Flammable ☐ Skin Irritant ☐ Poison B ☐ Unknown ☐ Radiological

Sample Disposal (A fee may be assessed if samples are retained longer than 1 month)
☐ Return To Client ☐ Disposal By Lab ☐ Archive For _____ Months

Deliverable Requested: I, II, III, IV, Other (specify)

Special Instructions/QC Requirements:

Empty Kit Relinquished by: | Date: | Time: | Method of Shipment:

Relinquished by	Date/Time	Company	Received by	Date/Time	Company
D Ermenebouf	6-16-16 1415	ETL			
Relinquished by:	Date/Time:	Company	Received by:	Date/Time:	Company
Relinquished by:	Date/Time:	Company	Received by:	Date/Time:	Company

Custody Seals Intact: Δ Yes Δ No
Custody Seal No.:
Cooler Temperature(s) °C and Other Remarks:

Pace Analytical Florida Laboratory	Document Name: Sample Condition Upon Receipt Form	Document Revised: December 28, 2015
	Document No.: F-FL-C-007 rev. 07	Issuing Authority: Pace Florida Quality Office

Sample Condition Upon Receipt Form (SCUR)

Project # WO#: 35250055

Project Manager: PM: VEG Due Date: 07/01/16

Client: CLIENT: EVNTES

Date and Initials of person examining contents: JAK
Label:
Deliver:
pH:

Courier: ☒ Fed Ex ☐ UPS ☐ USPS ☐ Client ☐ Commercial ☐ Pace Other ☐

Shipping Method: ☐ First Overnight ☒ Priority Overnight ☐ Standard Overnight ☐ Ground

Billing: ☐ Recipient ☒ Sender ☐ Third Party ☐ Unkown **Cooler Size if Applicable:**

Tracking # 7765 3958 6305

Custody Seal on Cooler/Box Present: ☐ yes ☒ no **Seals intact:** ☒ yes ☐ no

Packing Material: ☐ Bubble Wrap ☒ Bubble Bags ☐ None ☐ Other **Biological Tissue is Frozen:** Yes No N/A

Thermometer Used **Type of Ice:** (Wet) Blue None ☐ Samples on ice, cooling process has begun

Cooler #1 Temperature°C 4.7 **(Visual)** 0 **(Correction Factor)** 4.7 **(Actual)**

Cooler #2 Temperature°C **(Visual)** **(Correction Factor)** **(Actual)**

Cooler #3 Temperature°C **(Visual)** **(Correction Factor)** **(Actual)**

Cooler #4 Temperature°C **(Visual)** **(Correction Factor)** **(Actual)**

Cooler #5 Temperature°C **(Visual)** **(Correction Factor)** **(Actual)**

Cooler #6 Temperature°C **(Visual)** **(Correction Factor)** **(Actual)**

Temp should be above freezing to 6°C

		Comments:
Chain of Custody Present	☒ Yes ☐ No ☐ N/A	
Chain of Custody Filled Out	☒ Yes ☐ No ☐ N/A	
Relinquished Signature & Sampler Name COC	☒ Yes ☐ No ☐ N/A	
Samples Arrived within Hold Time	☒ Yes ☐ No ☐ N/A	
Rush TAT requested on COC	☐ Yes ☒ No ☐ N/A	
Sufficient Volume	☒ Yes ☐ No ☐ N/A	
Correct Containers Used	☒ Yes ☐ No ☐ N/A	
Pace Containers Used	☒ Yes ☐ No ☐ N/A	
Containers Intact	☒ Yes ☐ No ☐ N/A	
Sample Labels match COC (sample IDs & date/time of collection)	☒ Yes ☐ No ☐ N/A	
All containers needing acid/base preservation have been checked.	☒ Yes ☐ No ☐ N/A	HNO3 pH<2 HCl pH<2 H2SO4 pH<2 NaOH pH>12 NaOH/ZnOAc pH>9
All Containers needing preservation are found to be in compliance with EPA recommendation: Exceptions: VOA, Coliform, TOC, O&G	☒ Yes ☐ No ☐ N/A	
No Headspace in VOA Vials (>6mm):	☒ Yes ☐ No ☐ N/A	
Trip Blank Present:	☐ Yes ☐ No ☒ N/A	

Client Notification/ Resolution:

Person Contacted: Date/Time:

Comments/ Resolution (use back for additional comments):

Project Manager Review: **Date:**

EnviroTest Laboratories Inc.

ANALYTICAL REPORT

Job Number: 420-106343-1

SDG Number: Wild Oaks, Salem, NY

Job Description: LBG, Inc.

For:
Leggette, Brashears & Graham, Inc.
4 Research Drive
Shelton, CT 06464

Attention: Stacy Stieber

Debra Bayer
Customer Service Manager
dbayer@envirotestlaboratories.com

06/28/2016

NYSDOH ELAP does not certify for all parameters. EnviroTest Laboratories does hold certification for all analytes where certification is offered by ELAP unless otherwise specified in the Certification Information section of this report. Pursuant to NELAP, this report may not be reproduced, except in full, without written approval of the laboratory. EnviroTest Laboratories Inc. certifies that the analytical results contained herein apply only to the samples tested as received by our laboratory. All questions regarding this report should be directed to the EnviroTest Customer Service Representative.

EnviroTest Laboratories, Inc. Certifications and Approvals: NYSDOH 10142, NJDEP NY015, CTDOPH PH-0554

METHOD SUMMARY

Client: Leggette, Brashears & Graham, Inc.

Job Number: 420-106343-1
SDG Number: Wild Oaks, Salem, NY

Description	Lab Location	Method	Preparation Method
Matrix: Water			
Total Coliform and Escherichia coli by Colilert - Presence/Absence	EnvTest	SMWW SM 9223	

Lab References:

EnvTest = EnviroTest

Method References:

SMWW = "Standard Methods for the Examination of Water and Wastewater"

METHOD / ANALYST SUMMARY

Client: Leggette, Brashears & Graham, Inc.

Job Number: 420-106343-1
SDG Number: Wild Oaks, Salem, NY

Method	Analyst	Analyst ID
SMWW SM 9223	O'Driscoll, Kate	KO

SAMPLE SUMMARY

Client: Leggette, Brashears & Graham, Inc.

Job Number: 420-106343-1
SDG Number: Wild Oaks, Salem, NY

Lab Sample ID	Client Sample ID	Client Matrix	Date/Time Sampled	Date/Time Received
420-106343-1	Well 6	Drinking Water	06/24/2016 0920	06/24/2016 1025

Client: Leggette, Brashears & Graham, Inc.

Job Number: 420-106343-1
Sdg Number: Wild Oaks, Salem, NY

Biology

Client Sample ID: **Well 6**

Lab Sample ID: 420-106343-1
Client Matrix: Drinking Water

Date Sampled: 06/24/2016 0920
Date Received: 06/24/2016 1025

Analyte	Result	Qual	Units	Dil	Method
Coliform, Total	Absent		CFU/100mL	1.0	SM 9223
	Anly Batch: 420-99522	Date Analyzed	06/24/2016 1658		
Escherichia coli	Absent		CFU/100mL	1.0	SM 9223
	Anly Batch: 420-99522	Date Analyzed	06/24/2016 1658		

DATA REPORTING QUALIFIERS

Lab Section	Qualifier	Description

Certification Information

The following analytes are Not Part of the ELAP scope of accreditation:
Sulfur, Tungsten, Silicon, Bicarbonate Alkalinity, 7 Day BOD 5210C, 28 Day BOD,Soluble BOD, Carbon Dioxide, carbonate Alkalinity, CBOD Soluble, Chlorine, Cyanide (WAD), Ferrous Iron, Ferric Iron, Total Nitrogen, Total Organic Nitrogen, Dissolved Oxygen, pH, Phenolpthalien Alkalinity, Solids (Fixed), Solids (Percent), Solids (Percent Moisture), Solids (Percent Volatile), Solids (Volatile Suspended), Temperature, TKN (Soluble), Total Inorganic Carbon,Volatile Acids as Acetic Acid, 2-Aminopyridine, 3-Picoline, 1-Methyl-2-pyrrilidinone,Aziridine, Dimethyl sulfoxide, Fluorobenzene, 1-Chlorohexane, Iron Bacteria, Salmonella, & Sulfur Reducing Bacteria.

The following analytes are Not Part of ELAP Potable Water scope of accreditation:
Cobalt (200.7, 200.8), Tin (200.7), Strontium (200.7), Gold (200.7), Platinium (200.7), Palladium (200.7), Titanium (200.7), Phosphorus (365.3), Nitrate-Nitrite (10-107-4-1C, 353.2), m-Xylene & p-Xylene (502.2, 524), Naphthalene (502.2), o-Xylene (502.2, 524), & Fecal Coliform (9222D).

The following analytes are Not Part of ELAP Solid and Hazardous Waste scope of accreditation:
Ammonia (SM 4500NH3G), Nitrate-Nitrite (353.2, 10-107-4-1C), TKN (351.2), Phosphorus (365.3), Total Cresols (8270), 1,2-Dichloro-1,1,2-trifluoroethane (8260), & Chlorodifluoromethane (8260).

The following analytes are Not Part of ELAP Non Potable Water scope of accreditation:
Dissolved Organic Carbon (5310C), Mecoprop (8151A), & MCPA (8151A).

The following analytes are Part of ELAP scope of accreditation but not for the noted methods:
Nitrate (Solid & Hazardous Waste Matrix, 300), Nitrite (Solid & Hazardous Waste, 300, 4500NO2), Sulfate (Solid & Hazardous, 300.0), alpha-Chlordane (608), Endrin Ketone (608), gamma-Chlordane (608), PCB-1262 (608), PCB-1268 (608), 1,2-Diphenylhydrazine (625), 2-MethylNapthalene (625), 3-Methylphenol (625), 4-Nitoaniline (625), 1,1,1,2- Tetrachloroethane (624,601), 1,1,2-Trichloro-1,2,2-trifluoroethane (601,624), 1,2,3-Trichlorobenzene (624, 601), 1,2,3-Trichloropropane (624),1,2,4-Trichlorobenzene (601,624), 1,2,4-trimethylbenzene (624), 1,2-Dichloro-3-Chloropropane (601, 624),1,2-Dichloro-1,1,2-trifluoroethane (601, 624), 1,3,5-Trimethylbenzene (624), 1,3-Dichloropropane (624), 2,2-dichloropropane (601,624), 2-chlorotoluene (601,624), 2-hexanone (624), 4-Chlorotoluene (601,624), 4-Isopropyltoluene (624), Acetonitrile (624), Benzyl Chloride (624, 8021), Bromobenzene (601,624), Carbon disulfide (624), Bromochloromethane (624), Dibromomethane (624), 1,2-Dibromoethane (624), Hexachlorobutadiene (624), Isopropylbenzene (624), 2-Butanone (Methyl Ethyl Ketone) (624), 4-methyl-2-pentanone (624), MTBE (602), m-Xylene & p-Xylene (8021), Naphthalene (602,624), n-Butylbenzene (624), n-Propylbenzene (624), sec-Butylbenzene (624), tert-Butylbenzene (624), trans-1,4-Dichloro-2-butene (624), & Tetrahydrofuran (8260, 624).

The following analytes are Part of ELAP Scope of accreditation but not part of our certification:
Silica (6010), Free Cyanide (4500CN E), Amenable Cyanide (4500DCNG), & Vinyl Acetate (624).

The following Analytes are Part of ELAP Scope of accreditation but not part of our certification for a Non Potable Water Matrix:
Aluminium (200.8), Turbidity (180.1), Methanol (8015D), Dalapon (8151A), 1,2-Dichlorobenzene (601), Acetone (624), MTBE (624), m-Xylene & p-Xylene (602).

The following Analytes are Part of ELAP Scope of accreditation but not part of our certification for a Potable Water Matrix:
Bromide (300), Ethylene Glycol (8015D), Propylene Glycol (8015D).

The following Analyte(s) Part of ELAP Scope of accreditation but not part of our certification for a Solid and Hazardous Waste Matrix:
1,2-Diphenolhydrazine (8270).

The following Analytes are Part of ELAP Scope of accreditation but not part of our certification for an Air Matrix:
1,2-Dichlorobenzene, Carbon tetrachloride, Chlorobenzene, Chloroform, Ethylbenzene, Methylene Chloride, Tetrachloroethene, Toluene, & Trichloroethene.

Definitions and Glossary

Abbreviation	These commonly used abbreviations may or may not be present in this report.
%R	Percent Recovery
DL, RA, RE	Indicates a Dilution, Reanalysis or Reextraction.
EPA	United States Environmental Protection Agency
MDL	Method Detection Limit - an estimate of the minimum amount of a substance that an analytical process can reliably detect. A MDL is analyte- and matrix-specific and may be laboratory-dependent.
ND	Not detected at the reporting limit (or MDL if shown).
QC	Quality Control
RL	Reporting Limit - the minimum levels, concentrations, or quantities of a target variable (e.g., target analyte) that can be reported with a specified degree of confidence.
RPD	Relative Percent Difference - a measure of the relative difference between two points.

EnviroTest Laboratories Inc.

CHAIN OF CUSTODY

315 Fullerton Avenue
Newburgh, NY 12550
TEL (845) 562-0890
FAX (845) 562-0841

CUSTOMER NAME: LBG, Inc.
ADDRESS: 4 Research Dr. Suite #204
CITY, STATE, ZIP: Shelton, CT 06484
NAME OF CONTACT: Stacy Stiehler
PHONE NO.: 203-929-8555
PROJECT LOCATION: Salem, NY
PROJECT NUMBER / PO NO.: Wild Oaks

REPORT TYPE
STANDARD ☒ ISRA ☐
NJ REG ☐
NYASP A ☐ B ☐ CLP ☐
OTHER _____

TURNAROUND
☐ NORMAL _____
☒ QUICK _____
☐ VERBAL _____

REPORT # (Lab Use Only): 106343
SAMPLE TEMP. 9.3° C
SAMPLE REC'D ON ICE ☒ Y ☐ N
ph CHECK ☐ Y ☐ N
CHLORINE (RESIDUAL) ☐ Y ☐ N
REVIEWED BY: _____

NY PUBLIC WATER SUPPLIES
SOURCE ID ___ ___ ___
ELAP TYPE ___ ___ ___
FEDERAL ID ___ ___ ___ ___ ___ ___ ___

Matrix
DW = DRINKING WATER S = SOIL O = OIL
WW = WASTE WATER SL = SLUDGE GW = GROUND WATER

NOTE: SAMPLE TEMPERATURE UPON RECEIPT MUST BE 4° ± 2°C.

ETL #	SAMPLING DATE	TIME AM PM	COMP	GRAB	MATRIX	CLIENT I.D.	Total Number of Containers	40ml Glass HCL	Liter Amber HCL	250ml Amber Sulfuric	Liter Amber Organic Washed	250ml Plastic Nitric Acid	250ml Plastic Sodium Hydroxide	Liter Plastic	250ml Plastic Sulfuric Acid	250ml Plastic	125ml Plastic Sterile	250ml Plastic NAOH/ZN ACC	40ml Glass Sulfuric	40ml Glass	DO		ANALYSIS REQUESTED
	6/23/16	09:20		X	DW	Well 6	1										1						Total Coliform

SAMPLES SUBMITTED FOR ANALYSIS WILL BE SUBJECT TO THE ETL TERMS AND CONDITIONS OF SALE UNLESS ALTERNATE TERMS ARE AGREED IN WRITING.

RELINQUISHED BY	COMPANY	DATE	TIME	RECEIVED BY	COMPANY	DATE	TIME
[illegible]	LBG	6/24/16	10:25				
SAMPLED BY	COMPANY	DATE	TIME	RECEIVED BY	COMPANY	DATE	TIME
RELINQUISHED BY	COMPANY	DATE	TIME	RECEIVED BY	COMPANY	DATE	TIME
				[illegible]	ETL	6/24/16	10:25

COMMENTS _____

NYSDOH 10142 NJDEP NY015 CTDOPH PH-0554 EPA NY00049

06/28/2016

LOGIN SAMPLE RECEIPT CHECK LIST

Client: Leggette, Brashears & Graham, Inc.

Job Number: 420-106343-1
SDG Number: Wild Oaks, Salem, NY

Login Number: **106343**

Question	T/F/NA	Comment
Samples were collected by ETL employee as per SOP-SAM-1	NA	
The cooler's custody seal, if present, is intact.	NA	
The cooler or samples do not appear to have been compromised or tampered with.	True	
Samples were received on ice.	True	
Cooler Temperature is recorded.	True	9.3 C
Cooler Temp. is within method specified range.(0-6 C PW, 0-8 C NPW, or BAC <10 C	True	
If false, was sample received on ice within 6 hours of collection.	NA	
Based on above criteria cooler temperature is acceptable.	True	
COC is present.	True	
COC is filled out in ink and legible.	True	
COC is filled out with all pertinent information.	True	
There are no discrepancies between the sample IDs on the containers and the COC.	True	
Samples are received within Holding Time.	True	
Sample containers have legible labels.	True	
Containers are not broken or leaking.	True	
Sample collection date/times are provided.	True	
Appropriate sample containers are used.	True	
Sample bottles are completely filled.	True	
There is sufficient vol. for all requested analyses, incl. any requested MS/MSDs	True	
VOA sample vials do not have headspace or bubble is <6mm (1/4") in diameter.	NA	
If necessary, staff have been informed of any short hold time or quick TAT needs	True	
Multiphasic samples are not present.	True	
Samples do not require splitting or compositing.	True	

APPENDIX X

PHYSICAL PARAMETERS

PHYSICAL PARAMETERS

MAY 2015

LEGGETTE, BRASHEARS & GRAHAM, INC.

NEW YORK AMERICAN WATER COMPANY
WILD OAKS WATER SYSTEM
LEWISBORO, NEW YORK

Temperature Measurements Collected from Well 4, Pond, and Lake During 72-Hour Pumping Test of Well 4, May 26 Through May 30, 2015

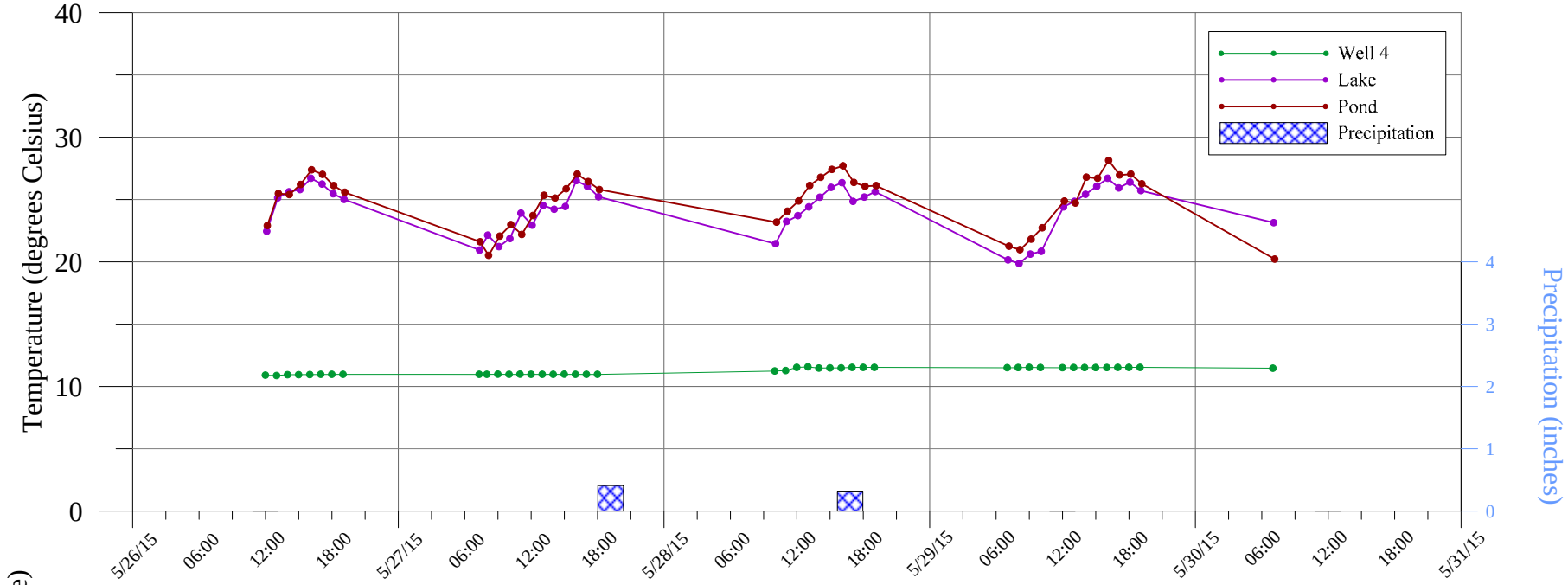

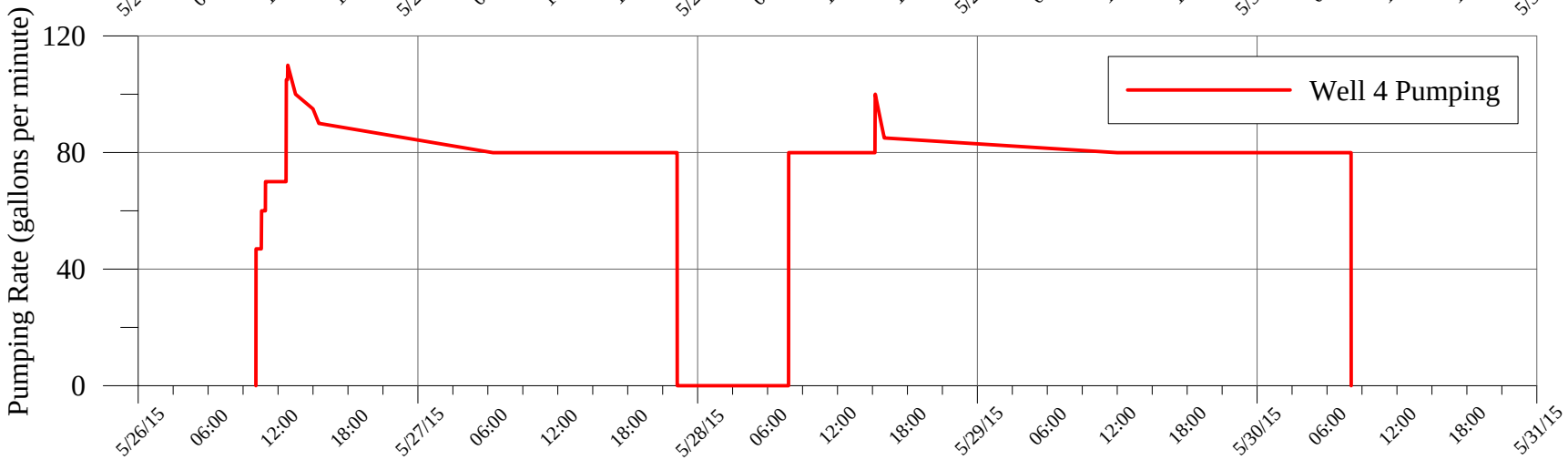

NEW YORK AMERICAN WATER COMPANY
WILD OAKS WATER SYSTEM
LEWISBORO, NEW YORK

Conductivity Measurements Collected from Well 4, Pond, and Lake During 72-Hour Pumping Test of Well 4, May 26 Through May 30, 2015

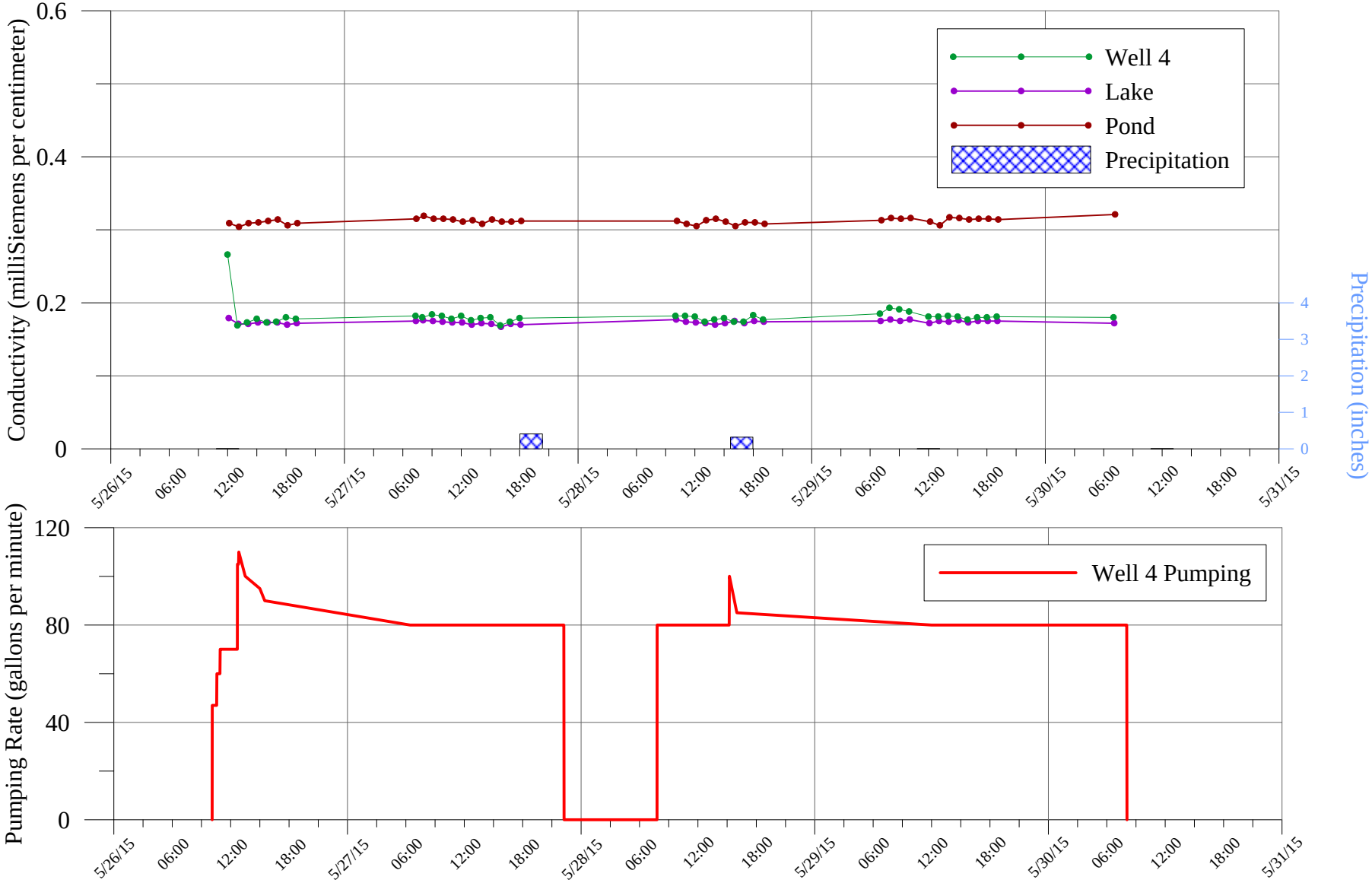

K:\Jobs\American Water Co\Wild Oaks\72-Hour Pumping Test (May 2015)\Hydrographs\Surface Water Parameters\Well 4 Conductivity.grf

LEGGETTE, BRASHEARS & GRAHAM, INC.

NEW YORK AMERICAN WATER COMPANY
WILD OAKS WATER SYSTEM
LEWISBORO, NEW YORK

Total Dissolved Solid Measurements Collected from Well 4, Pond, and Lake During 72-Hour Pumping Test of Well 4, May 26 Through May 30, 2015

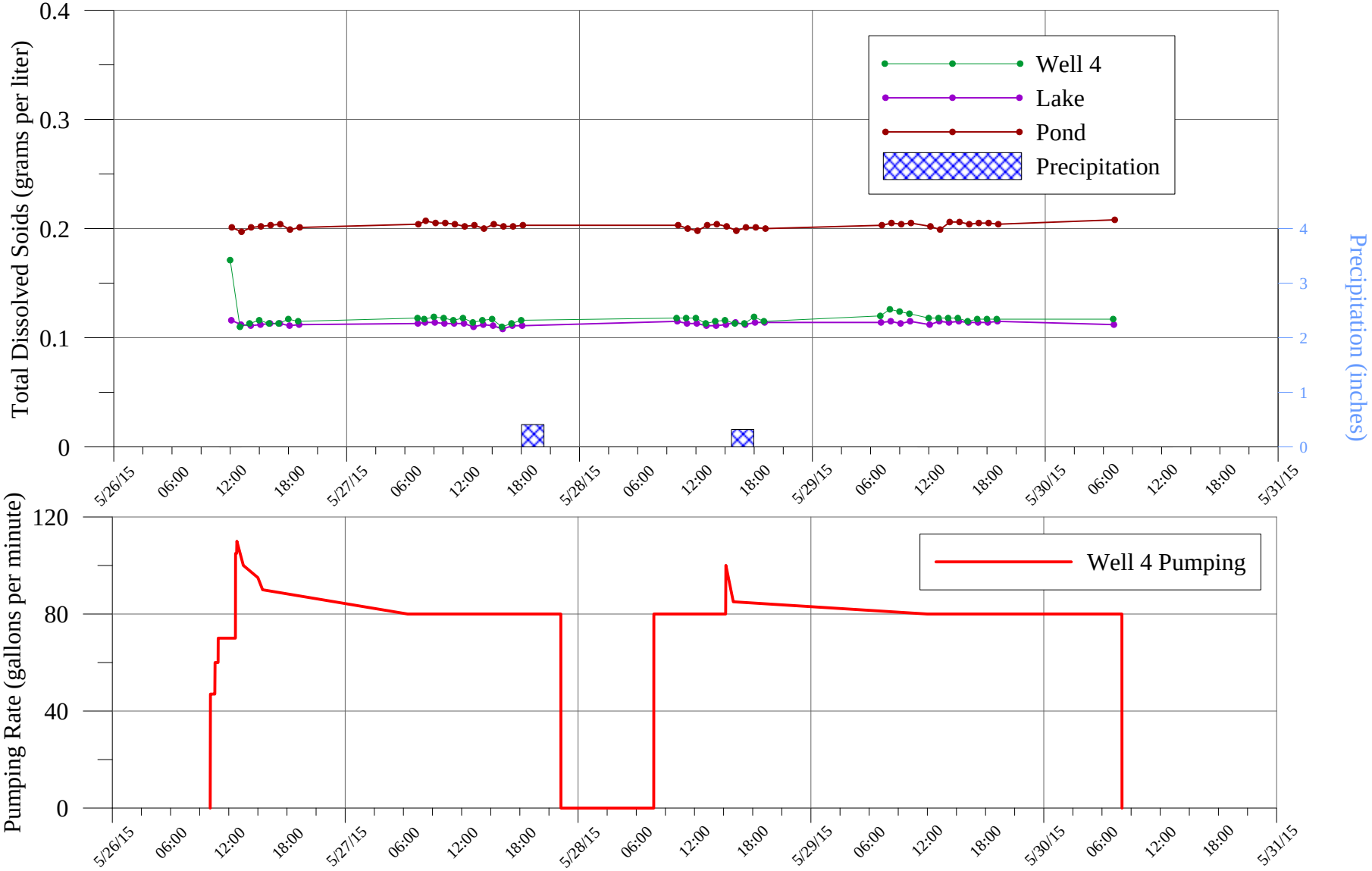

K:\Jobs\American Water Co\Wild Oaks\72-Hour Pumping Test (May 2015)\Hydrographs\Surface Water Parameters\Well 4 TDS.grf

LEGGETTE, BRASHEARS & GRAHAM, INC.

NEW YORK AMERICAN WATER COMPANY
WILD OAKS WATER SYSTEM
LEWISBORO, NEW YORK

pH Measurements Collected from Well 4, Pond, and Lake During 72-Hour Pumping Test of Well 4, May 26 Through May 30, 2015

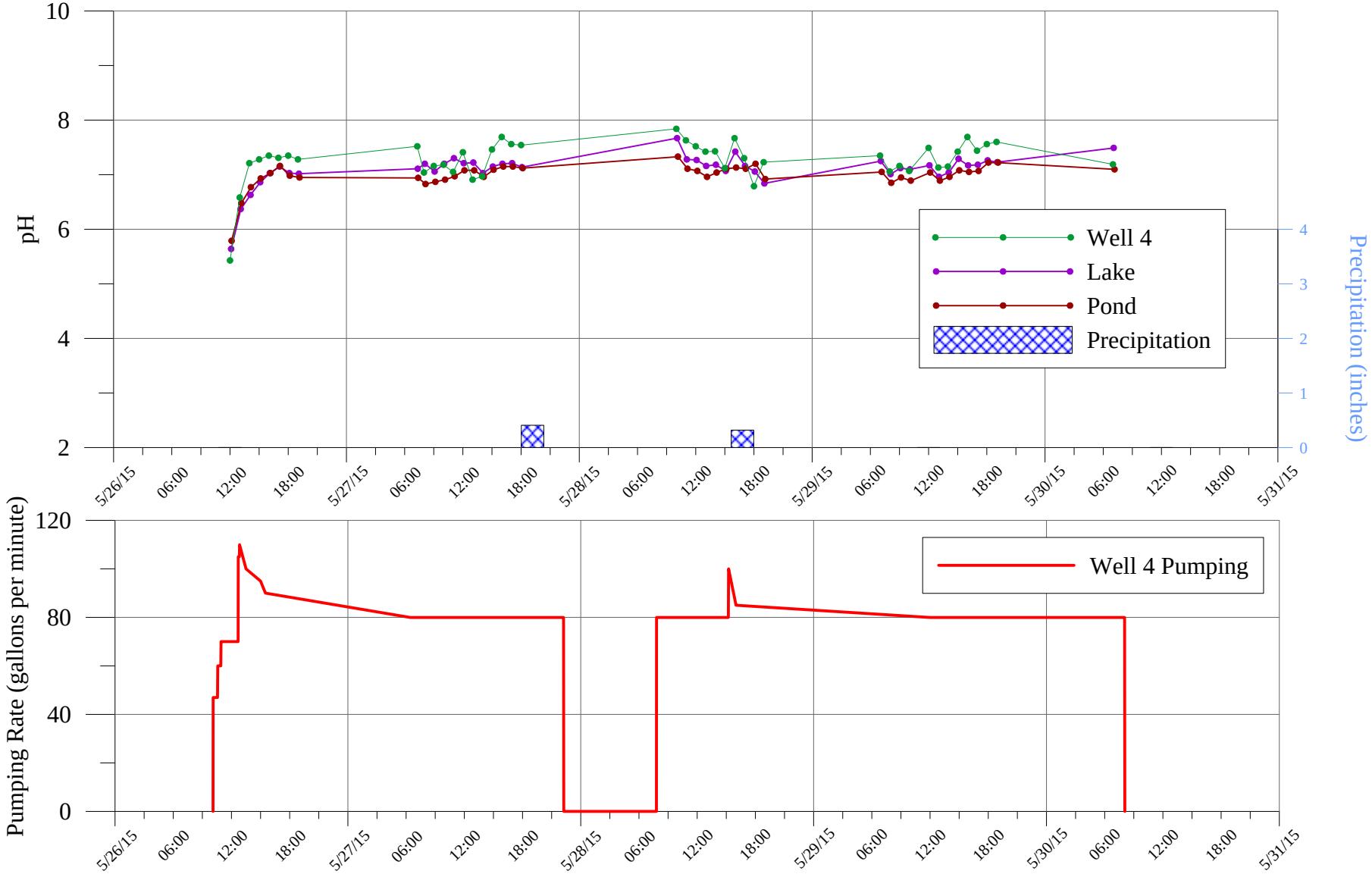

K:\Jobs\American Water Co\Wild Oaks\72-Hour Pumping Test (May 2015)\Hydrographs\Surface Water Parameters\Well 4 pH.grf

LEGGETTE, BRASHEARS & GRAHAM, INC.

NEW YORK AMERICAN WATER COMPANY
WILD OAKS WATER SYSTEM
LEWISBORO, NEW YORK

Physical Parameter Measurements Collected During 72-Hour Pumping Test Conducted on Well 4 from May 26 Through May 30, 2015

Date	Time	pH (S.U.)	Temperature (°C)	Conductivity (mS/cm)	TDS (g/L)	Date	Time	pH (S.U.)	Temperature (°C)	Conductivity (mS/cm)	TDS (g/L)	Date	Time	pH (S.U.)	Temperature (°C)	Conductivity (mS/cm)	TDS (g/L)
Well 4						**Pond**						**Lake**					
5/26/15	12:00	5.43	10.91	0.266	0.171	5/26/15	12:10	5.79	22.91	0.309	0.201	5/26/15	12:07	5.64	22.45	0.179	0.116
5/26/15	13:00	6.58	10.88	0.169	0.110	5/26/15	13:10	6.48	25.49	0.304	0.197	5/26/15	13:07	6.37	25.13	0.171	0.112
5/26/15	14:00	7.21	10.94	0.173	0.113	5/26/15	14:10	6.77	25.40	0.309	0.201	5/26/15	14:07	6.63	25.63	0.171	0.111
5/26/15	15:00	7.28	10.95	0.178	0.116	5/26/15	15:10	6.93	26.21	0.310	0.202	5/26/15	15:07	6.86	25.80	0.173	0.112
5/26/15	16:00	7.35	10.96	0.173	0.113	5/26/15	16:10	7.03	27.39	0.312	0.203	5/26/15	16:07	7.03	26.70	0.173	0.113
5/26/15	17:00	7.31	10.97	0.174	0.113	5/26/15	17:10	7.16	27.03	0.314	0.204	5/26/15	17:07	7.15	26.24	0.173	0.113
5/26/15	18:00	7.35	10.97	0.180	0.117	5/26/15	18:10	6.98	26.12	0.306	0.199	5/26/15	18:07	7.03	25.47	0.170	0.111
5/26/15	19:00	7.28	10.97	0.178	0.115	5/26/15	19:10	6.95	25.59	0.309	0.201	5/26/15	19:07	7.02	25.01	0.172	0.112
5/27/15	7:18	7.52	10.97	0.182	0.118	5/27/15	7:24	6.94	21.61	0.315	0.204	5/27/15	7:21	7.11	20.95	0.175	0.113
5/27/15	8:00	7.04	10.97	0.180	0.117	5/27/15	8:10	6.83	20.52	0.319	0.207	5/27/15	8:05	7.2	22.15	0.176	0.114
5/27/15	9:00	7.16	10.98	0.184	0.119	5/27/15	9:10	6.87	22.06	0.315	0.205	5/27/15	9:05	7.06	21.23	0.175	0.114
5/27/15	10:00	7.18	10.98	0.182	0.118	5/27/15	10:10	6.91	22.98	0.315	0.205	5/27/15	10:05	7.2	21.87	0.174	0.113
5/27/15	11:00	7.05	10.98	0.178	0.116	5/27/15	11:10	6.97	22.20	0.314	0.204	5/27/15	11:05	7.3	23.90	0.173	0.113
5/27/15	12:00	7.41	10.97	0.182	0.118	5/27/15	12:10	7.08	23.72	0.311	0.202	5/27/15	12:05	7.21	22.94	0.173	0.113
5/27/15	13:00	6.91	10.97	0.176	0.114	5/27/15	13:10	7.08	25.34	0.313	0.203	5/27/15	13:05	7.22	24.53	0.170	0.110
5/27/15	14:00	6.97	10.98	0.179	0.116	5/27/15	14:10	6.96	25.12	0.308	0.200	5/27/15	14:05	7.03	24.23	0.172	0.112
5/27/15	15:00	7.46	10.98	0.180	0.117	5/27/15	15:10	7.09	25.87	0.314	0.204	5/27/15	15:05	7.15	24.44	0.171	0.111
5/27/15	16:00	7.69	10.97	0.169	0.110	5/27/15	16:10	7.15	27.04	0.311	0.202	5/27/15	16:05	7.2	26.52	0.167	0.108
5/27/15	17:00	7.56	10.98	0.174	0.113	5/27/15	17:10	7.15	26.44	0.311	0.202	5/27/15	17:05	7.21	26.07	0.171	0.111
5/27/15	18:00	7.54	10.97	0.179	0.116	5/27/15	18:10	7.12	25.80	0.312	0.203	5/27/15	18:05	7.14	25.22	0.170	0.111
5/28/15	10:00	7.84	11.24	0.182	0.118	5/28/15	10:10	7.33	23.18	0.312	0.203	5/28/15	10:05	7.67	21.45	0.177	0.115
5/28/15	11:00	7.63	11.28	0.182	0.118	5/28/15	11:10	7.11	24.06	0.308	0.200	5/28/15	11:05	7.28	23.24	0.174	0.113
5/28/15	12:00	7.52	11.54	0.181	0.118	5/28/15	12:10	7.07	24.89	0.305	0.198	5/28/15	12:05	7.27	23.70	0.173	0.113
5/28/15	13:00	7.42	11.57	0.174	0.113	5/28/15	13:10	6.96	26.13	0.313	0.203	5/28/15	13:05	7.16	24.41	0.172	0.111
5/28/15	14:00	7.43	11.48	0.177	0.115	5/28/15	14:10	7.04	26.79	0.315	0.204	5/28/15	14:05	7.18	25.19	0.170	0.111
5/28/15	15:00	7.12	11.49	0.179	0.116	5/28/15	15:10	7.11	27.42	0.311	0.202	5/28/15	15:05	7.07	25.97	0.172	0.112

NEW YORK AMERICAN WATER COMPANY
WILD OAKS WATER SYSTEM
LEWISBORO, NEW YORK

Physical Parameter Measurements Collected During 72-Hour Pumping Test Conducted on Well 4 from May 26 Through May 30, 2015

Date	Time	pH (S.U.)	Temperature (°C)	Conductivity (mS/cm)	TDS (g/L)	Date	Time	pH (S.U.)	Temperature (°C)	Conductivity (mS/cm)	TDS (g/L)	Date	Time	pH (S.U.)	Temperature (°C)	Conductivity (mS/cm)	TDS (g/L)
Well 4 (continued)						**Pond (continued)**						**Lake (continued)**					
5/28/15	16:00	7.67	11.50	0.174	0.113	5/28/15	16:10	7.13	27.70	0.305	0.198	5/28/15	16:05	7.42	26.36	0.175	0.114
5/28/15	17:00	7.30	11.53	0.174	0.113	5/28/15	17:10	7.11	26.37	0.310	0.201	5/28/15	17:05	7.16	24.85	0.172	0.112
5/28/15	18:00	6.79	11.53	0.183	0.119	5/28/15	18:10	7.2	26.06	0.310	0.201	5/28/15	18:05	7.06	25.20	0.175	0.114
5/28/15	19:00	7.23	11.53	0.177	0.115	5/28/15	19:10	6.92	26.12	0.308	0.200	5/28/15	19:05	6.84	25.64	0.174	0.114
5/29/15	7:00	7.35	11.50	0.185	0.120	5/29/15	7:10	7.05	21.25	0.313	0.203	5/29/15	7:05	7.25	20.16	0.175	0.114
5/29/15	8:00	7.06	11.52	0.193	0.126	5/29/15	8:10	6.85	20.97	0.316	0.205	5/29/15	8:05	7.01	19.86	0.177	0.115
5/29/15	9:00	7.16	11.53	0.191	0.124	5/29/15	9:10	6.95	21.82	0.315	0.204	5/29/15	9:05	7.12	20.63	0.175	0.113
5/29/15	10:00	7.07	11.53	0.188	0.122	5/29/15	10:10	6.89	22.73	0.316	0.205	5/29/15	10:05	7.1	20.84	0.177	0.115
5/29/15	12:00	7.49	11.51	0.181	0.118	5/29/15	12:10	7.04	24.88	0.311	0.202	5/29/15	12:05	7.17	24.41	0.172	0.112
5/29/15	13:00	7.13	11.51	0.181	0.118	5/29/15	13:10	6.89	24.72	0.306	0.199	5/29/15	13:05	6.96	24.85	0.175	0.115
5/29/15	14:00	7.15	11.52	0.182	0.118	5/29/15	14:10	6.96	26.80	0.317	0.206	5/29/15	14:05	7.04	25.42	0.174	0.114
5/29/15	15:00	7.42	11.53	0.181	0.118	5/29/15	15:10	7.08	26.71	0.316	0.206	5/29/15	15:05	7.29	26.06	0.176	0.115
5/29/15	16:00	7.69	11.53	0.177	0.115	5/29/15	16:10	7.05	28.14	0.314	0.204	5/29/15	16:05	7.17	26.70	0.173	0.114
5/29/15	17:00	7.44	11.53	0.180	0.117	5/29/15	17:10	7.07	26.97	0.315	0.205	5/29/15	17:05	7.18	25.93	0.175	0.114
5/29/15	18:00	7.56	11.54	0.180	0.117	5/29/15	18:10	7.22	27.04	0.315	0.205	5/29/15	18:05	7.26	26.4	0.175	0.114
5/29/15	19:00	7.60	11.54	0.181	0.117	5/29/15	19:10	7.22	26.27	0.314	0.204	5/29/15	19:05	7.23	25.72	0.175	0.115
5/30/15	7:00	7.19	11.47	0.180	0.117	5/30/15	7:10	7.1	20.23	0.321	0.208	5/30/15	7:05	7.49	23.15	0.172	0.112

S.U. standard units
^{o}C degrees Celsius
mS/cm millisiemens per centimeter
g/L grams per liter
mV millivolt

WELL 4

WELL 5

NEW YORK AMERICAN WATER COMPANY
WILD OAKS WATER SYSTEM
LEWISBORO, NEW YORK

Temperature Measurements Collected from Well 5, Pond, Stream, and Lake During 72-Hour Pumping Test of Well 5, May 18 Through May 21, 2015

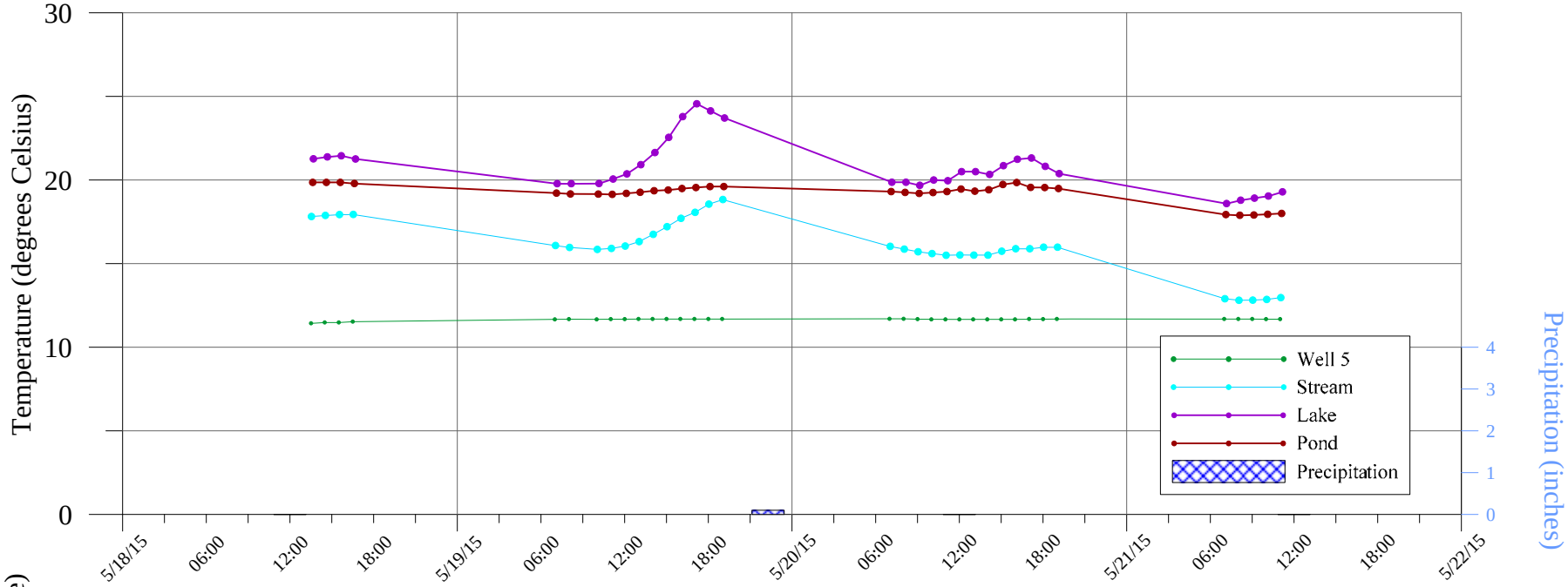

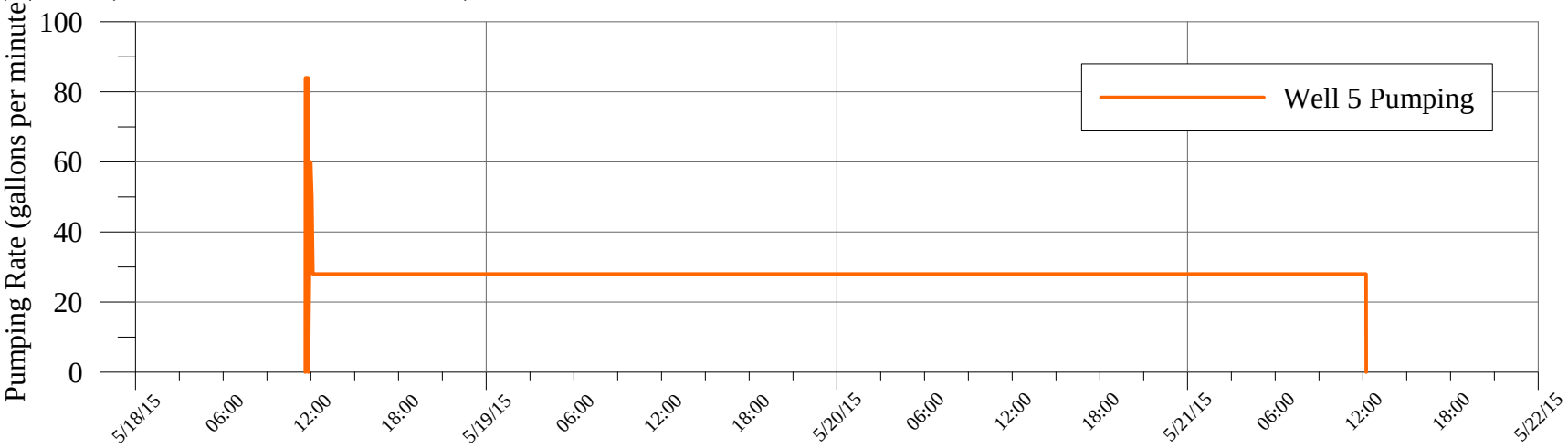

K:\Jobs\American Water Co\Wild Oaks\72-Hour Pumping Test (May 2015)\Hydrographs\Surface Water Parameters\Well 5 Temp.grf

LEGGETTE, BRASHEARS & GRAHAM, INC.

NEW YORK AMERICAN WATER COMPANY
WILD OAKS WATER SYSTEM
LEWISBORO, NEW YORK

Conductivity Measurements Collected from Well 5, Pond, Stream, and Lake During 72-Hour Pumping Test of Well 5, May 18 Through May 21, 2015

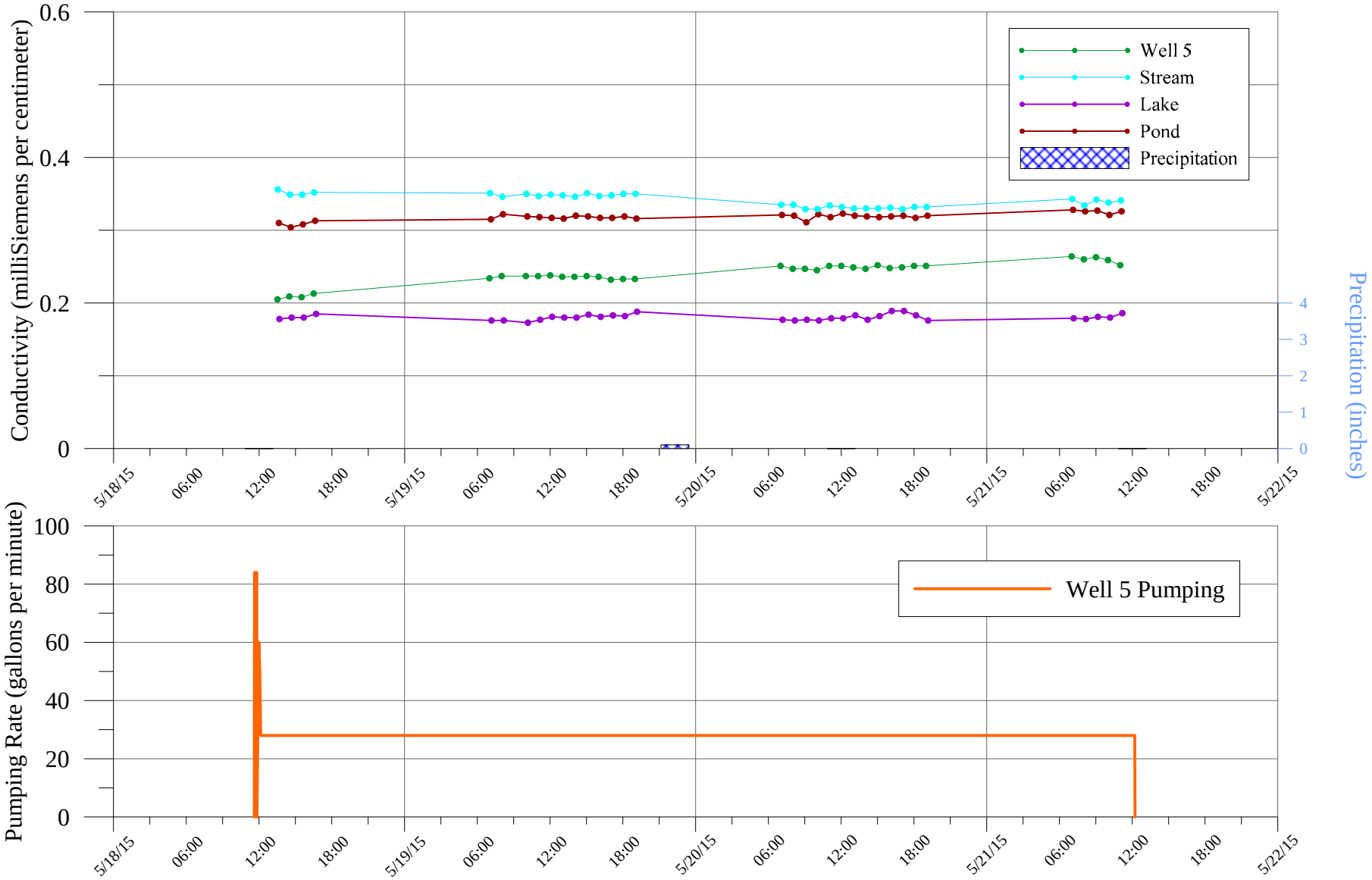

K:\Jobs\American Water Co\Wild Oaks\72-Hour Pumping Test (May 2015)\Hydrographs\Surface Water Parameters\Well 5 Conductivity.grf

LEGGETTE, BRASHEARS & GRAHAM, INC.

NEW YORK AMERICAN WATER COMPANY
WILD OAKS WATER SYSTEM
LEWISBORO, NEW YORK

Total Dissolved Solid Measurements Collected from Well 5, Pond, Stream, and Lake During 72-Hour Pumping Test of Well 5, May 18 Through May 21, 2015

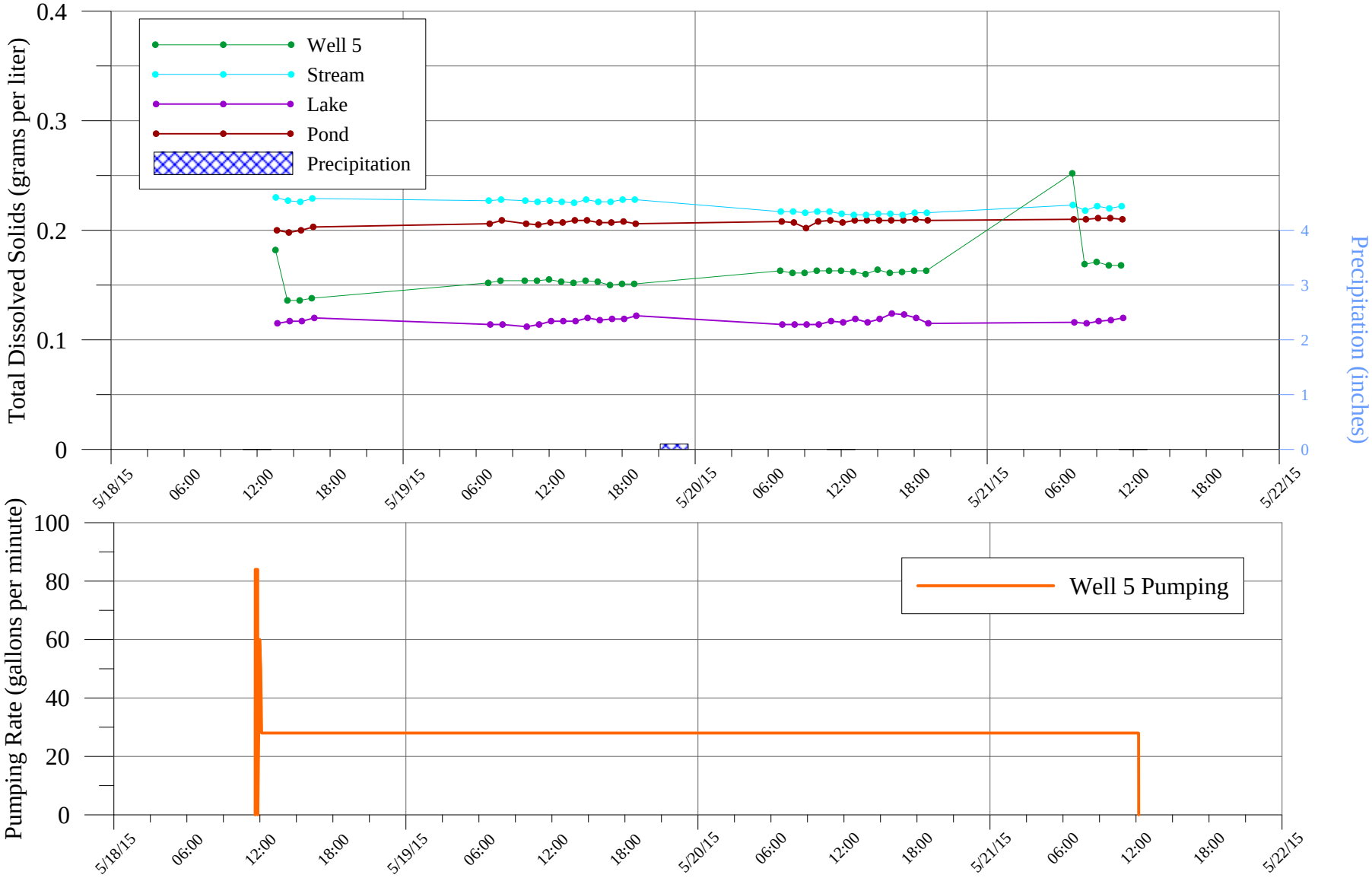

K:\Jobs\American Water Co\Wild Oaks\72-Hour Pumping Test (May 2015)\Hydrographs\Surface Water Parameters\Well 5 TDS.grf

LEGGETTE, BRASHEARS & GRAHAM, INC.

NEW YORK AMERICAN WATER COMPANY
WILD OAKS WATER SYSTEM
LEWISBORO, NEW YORK

pH Measurements Collected from Well 5, Pond, Stream, and Lake During 72-Hour Pumping Test of Well 5, May 18 Through May 21, 2015

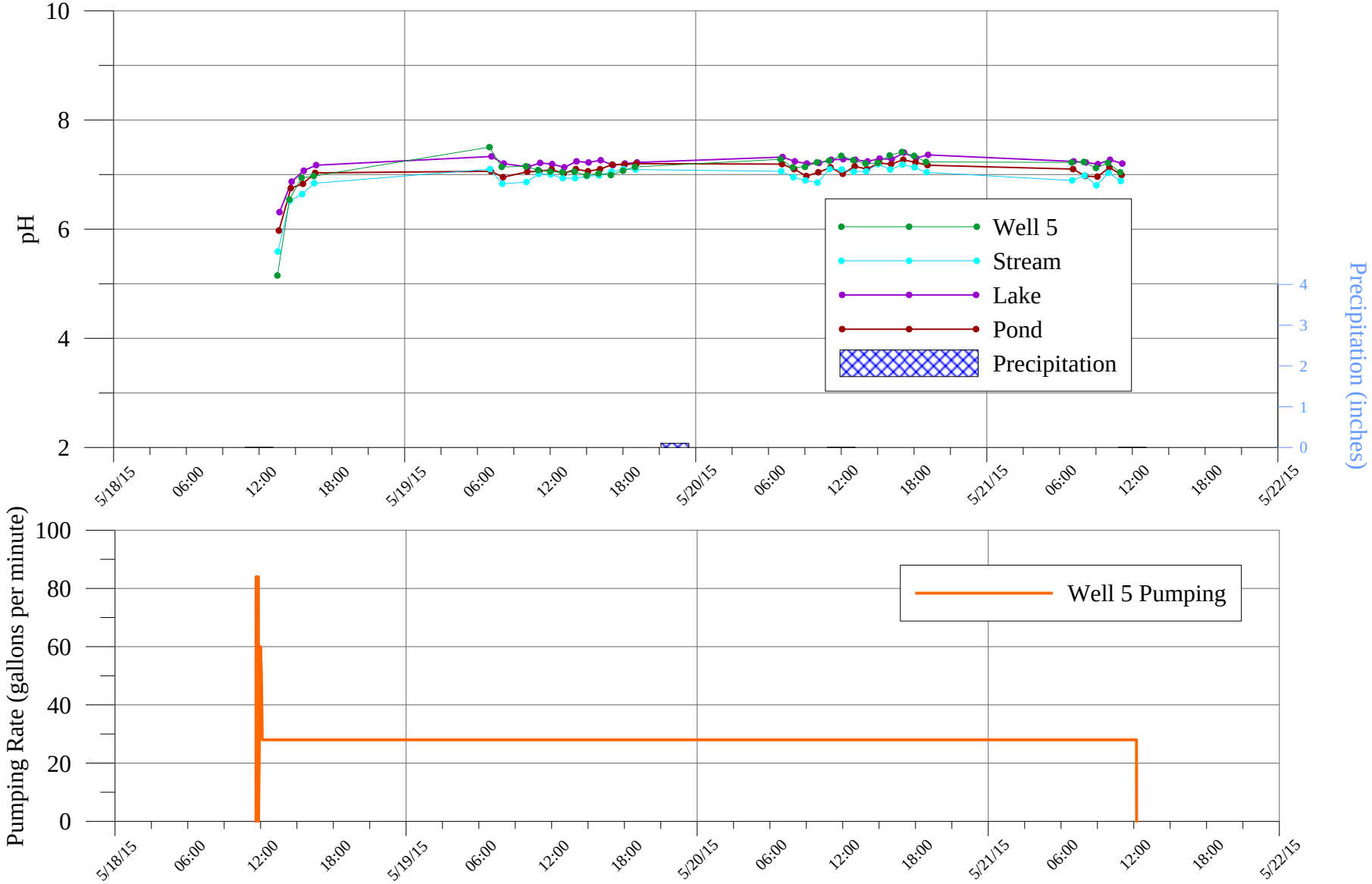

NEW YORK AMERICAN WATER COMPANY
WILD OAKS WATER SYSTEM
LEWISBORO, NEW YORK

Physical Parameter Measurements Collected During 72-Hour Pumping Test Conducted on Well 5 from May 18 Through May 21, 2015

Date	Time	pH (S.U.)	Cond (mS/cm)	Temp (°C)	TDS (g/L)	Time	pH (S.U.)	Cond (mS/cm)	Temp (°C)	TDS (g/L)	Time	pH (S.U.)	Cond (mS/cm)	Temp (°C)	TDS (g/L)	Time	pH (S.U.)	Cond (mS/cm)	Temp (°C)	TDS (g/L)
	Well 5					Stream					Pond					Lake				
5/18/15	13:31	5.15	0.285	11.44	0.182	13:33	5.59	0.356	17.82	0.230	13:38	5.97	0.310	19.86	0.200	13:41	6.31	0.178	21.27	0.115
5/18/15	14:30	6.54	0.209	11.48	0.136	14:33	6.52	0.349	17.88	0.227	14:37	6.75	0.304	19.86	0.198	14:41	6.87	0.180	21.38	0.117
5/18/15	15:30	6.94	0.208	11.48	0.136	15:33	6.64	0.349	17.93	0.226	15:37	6.83	0.308	19.86	0.200	15:41	7.07	0.180	21.45	0.117
5/18/15	16:30	6.97	0.213	11.53	0.138	16:33	6.84	0.352	17.94	0.229	16:37	7.03	0.313	19.79	0.203	16:42	7.17	0.185	21.26	0.120
5/19/15	7:00	7.50	0.234	11.67	0.152	7:03	7.10	0.351	16.08	0.227	7:07	7.06	0.315	19.22	0.206	7:10	7.33	0.176	19.78	0.114
5/19/15	8:00	7.14	0.237	11.68	0.154	8:03	6.83	0.346	15.97	0.228	8:07	6.95	0.322	19.17	0.209	8:10	7.2	0.176	19.78	0.114
5/19/15	10:00	7.15	0.237	11.67	0.154	10:03	6.86	0.350	15.85	0.227	10:07	7.05	0.319	19.16	0.206	10:10	7.14	0.173	19.79	0.112
5/19/15	11:00	7.08	2.370	11.68	0.154	11:03	7.01	0.347	15.91	0.226	11:07	7.06	0.318	19.14	0.205	11:10	7.21	0.177	20.06	0.114
5/19/15	12:00	7.05	0.238	11.68	0.155	12:03	7.00	0.349	16.05	0.227	12:07	7.09	0.317	19.20	0.207	12:10	7.19	0.181	20.37	0.117
5/19/15	13:00	7.04	0.236	11.69	0.153	13:03	6.93	0.348	16.32	0.226	13:07	7.02	0.316	19.27	0.207	13:10	7.13	0.180	20.92	0.117
5/19/15	14:00	7.05	0.236	11.69	0.152	14:03	6.93	0.346	16.75	0.225	14:07	7.10	0.320	19.36	0.209	14:10	7.24	0.180	21.64	0.117
5/19/15	15:00	6.98	0.237	11.69	0.154	15:03	6.97	0.351	17.21	0.228	15:07	7.06	0.319	19.40	0.209	15:10	7.22	0.184	22.55	0.120
5/19/15	16:00	7.02	0.236	11.69	0.153	16:03	6.98	0.347	17.71	0.226	16:07	7.10	0.317	19.49	0.207	16:10	7.26	0.181	23.79	0.118
5/19/15	17:00	6.99	0.232	11.69	0.150	17:03	7.05	0.348	18.07	0.226	17:07	7.18	0.317	19.55	0.207	17:10	7.17	0.183	24.56	0.119
5/19/15	18:00	7.07	0.233	11.69	0.151	18:03	7.10	0.350	18.56	0.228	18:07	7.18	0.319	19.61	0.208	18:10	7.2	0.182	24.13	0.119
5/19/15	19:00	7.14	0.233	11.69	0.151	19:03	7.09	0.350	18.83	0.228	19:07	7.20	0.316	19.61	0.206	19:10	7.22	0.188	23.71	0.122
5/20/15	7:00	7.28	0.251	11.70	0.163	7:03	7.06	0.335	16.03	0.217	7:07	7.19	0.321	19.31	0.208	7:10	7.32	0.177	19.87	0.114
5/20/15	8:00	7.13	0.247	11.70	0.161	8:03	6.95	0.335	15.87	0.217	8:07	7.10	0.320	19.26	0.207	8:10	7.24	0.176	19.87	0.114
5/20/15	9:00	7.14	0.247	11.69	0.161	9:03	6.89	0.329	15.71	0.216	9:07	6.97	0.311	19.20	0.202	9:10	7.2	0.177	19.68	0.114
5/20/15	10:00	7.22	0.245	11.67	0.163	10:03	6.85	0.329	15.60	0.217	10:07	7.04	0.322	19.25	0.208	10:10	7.21	0.176	20.00	0.114
5/20/15	11:00	7.25	0.251	11.67	0.163	11:03	7.10	0.334	15.50	0.217	11:07	7.13	0.318	19.31	0.209	11:10	7.27	0.179	19.96	0.117
5/20/15	12:00	7.34	0.251	11.67	0.163	12:03	7.09	0.332	15.52	0.215	12:07	7.01	0.323	19.46	0.207	12:10	7.28	0.179	20.50	0.116
5/20/15	13:00	7.26	0.249	11.67	0.162	13:03	7.05	0.330	15.51	0.214	13:07	7.15	0.320	19.33	0.209	13:10	7.27	0.183	20.50	0.119
5/20/15	14:00	7.20	0.247	11.67	0.160	14:03	7.06	0.330	15.51	0.214	14:07	7.10	0.319	19.42	0.209	14:10	7.24	0.177	20.33	0.116
5/20/15	15:00	7.21	0.252	11.67	0.164	15:03	7.19	0.330	15.74	0.215	15:07	7.21	0.318	19.73	0.209	15:10	7.29	0.182	20.86	0.119
5/20/15	16:00	7.35	0.248	11.67	0.161	16:03	7.09	0.331	15.89	0.215	16:07	7.19	0.319	19.85	0.209	16:10	7.28	0.189	21.24	0.124
5/20/15	17:00	7.41	0.249	11.69	0.162	17:03	7.18	0.329	15.89	0.214	17:07	7.27	0.320	19.56	0.209	17:10	7.4	0.189	21.32	0.123
5/20/15	18:00	7.34	0.251	11.68	0.163	18:03	7.13	0.332	15.98	0.216	18:07	7.22	0.317	19.55	0.210	18:10	7.3	0.183	20.82	0.120

NEW YORK AMERICAN WATER COMPANY
WILD OAKS WATER SYSTEM
LEWISBORO, NEW YORK

Physical Parameter Measurements Collected During 72-Hour Pumping Test Conducted on Well 5 from May 18 Through May 21, 2015

Date	Time	pH (S.U.)	Cond (mS/cm)	Temp (°C)	TDS (g/L)	Time	pH (S.U.)	Cond (mS/cm)	Temp (°C)	TDS (g/L)	Time	pH (S.U.)	Cond (mS/cm)	Temp (°C)	TDS (g/L)	Time	pH (S.U.)	Cond (mS/cm)	Temp (°C)	TDS (g/L)
	Well 5					**Stream**					**Pond**					**Lake**				
5/20/15	19:00	7.23	0.251	11.69	0.163	19:03	7.04	0.332	15.98	0.216	19:07	7.17	0.320	19.49	0.209	19:10	7.36	0.176	20.38	0.115
5/21/15	7:00	7.22	0.264	11.69	0.252	7:03	6.89	0.343	12.90	0.223	7:07	7.10	0.328	17.93	0.210	7:10	7.24	0.179	18.59	0.116
5/21/15	8:00	7.23	0.260	11.69	0.169	8:03	6.98	0.334	12.81	0.218	8:07	6.97	0.326	17.89	0.210	8:10	7.22	0.178	18.79	0.115
5/21/15	9:00	7.12	0.263	11.69	0.171	9:03	6.80	0.342	12.82	0.222	9:07	6.96	0.327	17.91	0.211	9:10	7.19	0.181	18.92	0.117
5/21/15	10:00	7.21	0.259	11.68	0.168	10:03	7.03	0.338	12.86	0.220	10:07	7.13	0.321	17.95	0.211	10:10	7.27	0.180	19.04	0.118
5/21/15	11:00	7.04	0.252	11.69	0.168	11:03	6.88	0.341	12.97	0.222	11:07	6.99	0.326	18.00	0.210	11:10	7.2	0.186	19.29	0.120

Cond conductivity
Temp temperature
mS/cm millisiemens per centimeter
NTU nephelometric turbidity units
mg/L milligrams per liter
g/L grams per liter
mV millivolts

PHYSICAL PARAMETERS

JUNE 2016

LEGGETTE, BRASHEARS & GRAHAM, INC.

WELL 6

WELL 6

NEW YORK AMERICAN WATER COMPANY
WILD OAKS WATER SYSTEM
LEWISBORO, NEW YORK

Graph of Temperature Measurements Collected from Well 6 Discharge Water and Nearby Surface Water During 72-Hour Pumping Test Conducted on Well 6 from June 14 Through 17, 2016

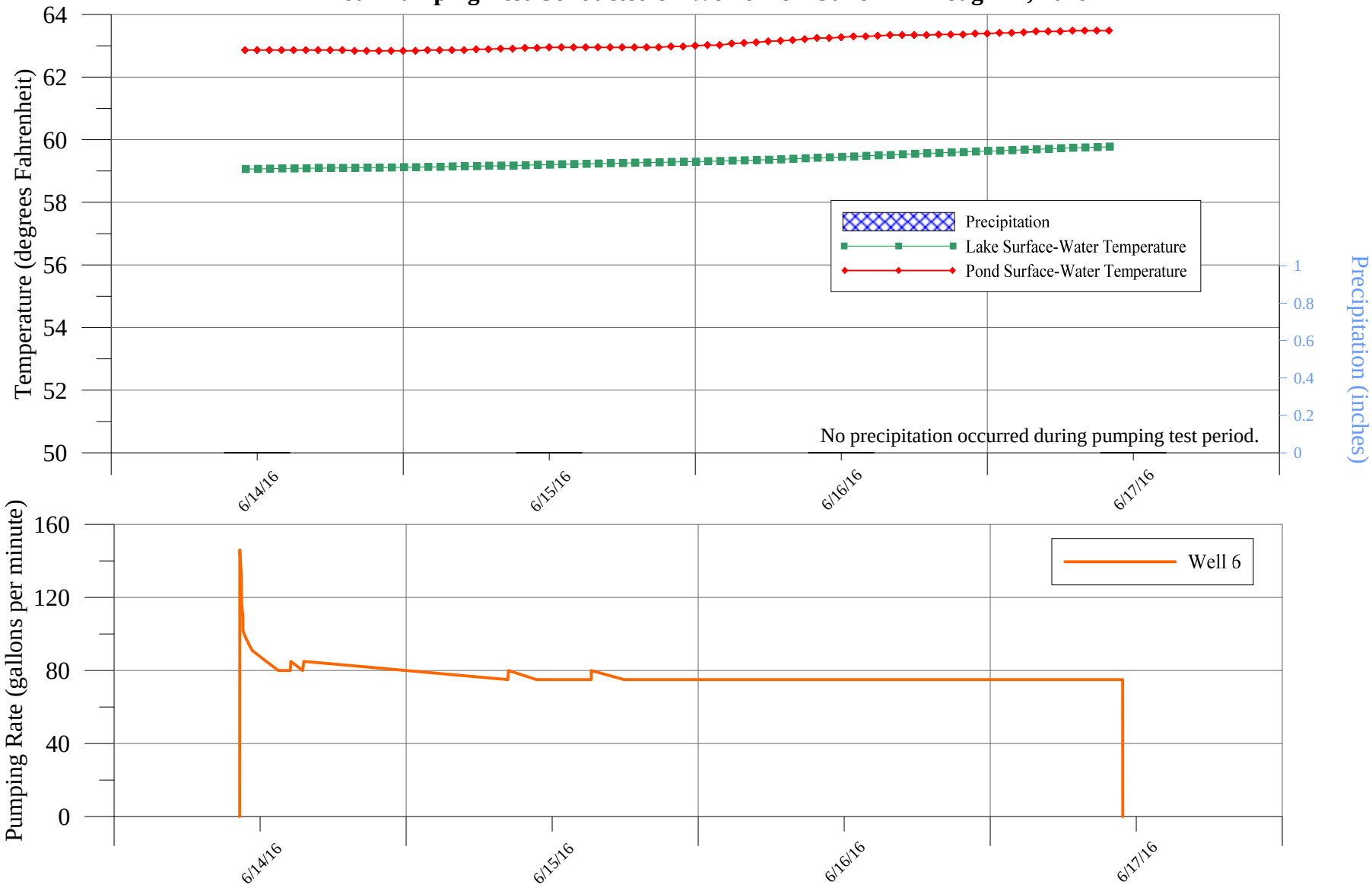

K:\Jobs\American Water Co\Wild Oaks\72-Hour Pumping Test (June 2016)\Hydrographs\Physical Parameters\Well 6 temp.grf

LEGGETTE, BRASHEARS & GRAHAM, INC.

NEW YORK AMERICAN WATER COMPANY
WILD OAKS WATER SYSTEM
LEWISBORO, NEW YORK

Graph of Conductivity Measurements Collected from Well 6 Discharge Water and Nearby Surface Water During 72-Hour Pumping Test Conducted on Well 6 from June 14 Through 17, 2016

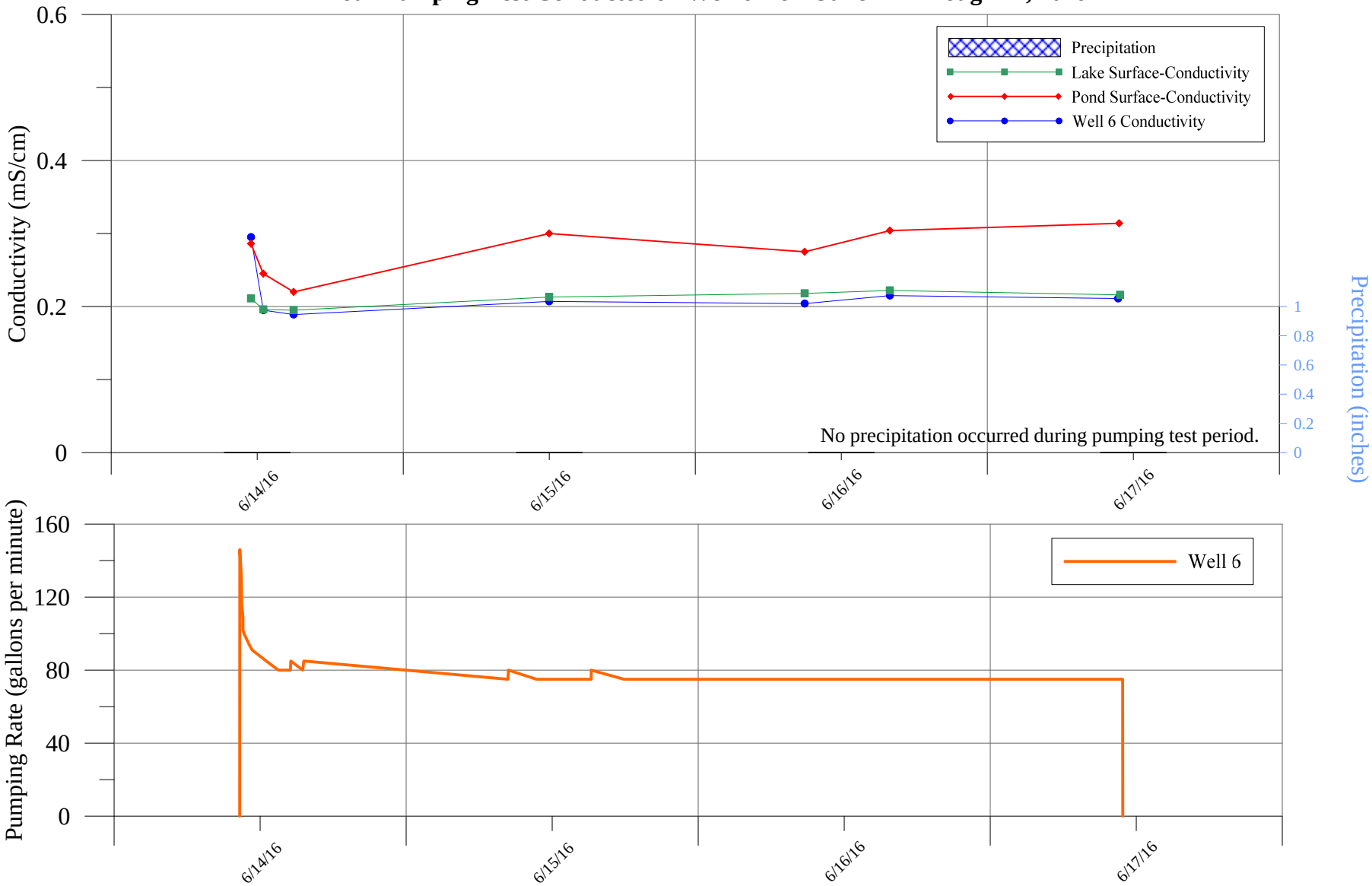

K:\Jobs\American Water Co\Wild Oaks\72-Hour Pumping Test (June 2016)\Hydrographs\Physical Parameters\Well 6 Conductivity.grf

LEGGETTE, BRASHEARS & GRAHAM, INC.

NEW YORK AMERICAN WATER COMPANY
WILD OAKS WATER SYSTEM
LEWISBORO, NEW YORK

Graph of pH Measurements Collected from Well 6 Discharge Water and Nearby Surface Water During 72-Hour Pumping Test Conducted on Well 6 from June 14 Through 17, 2016

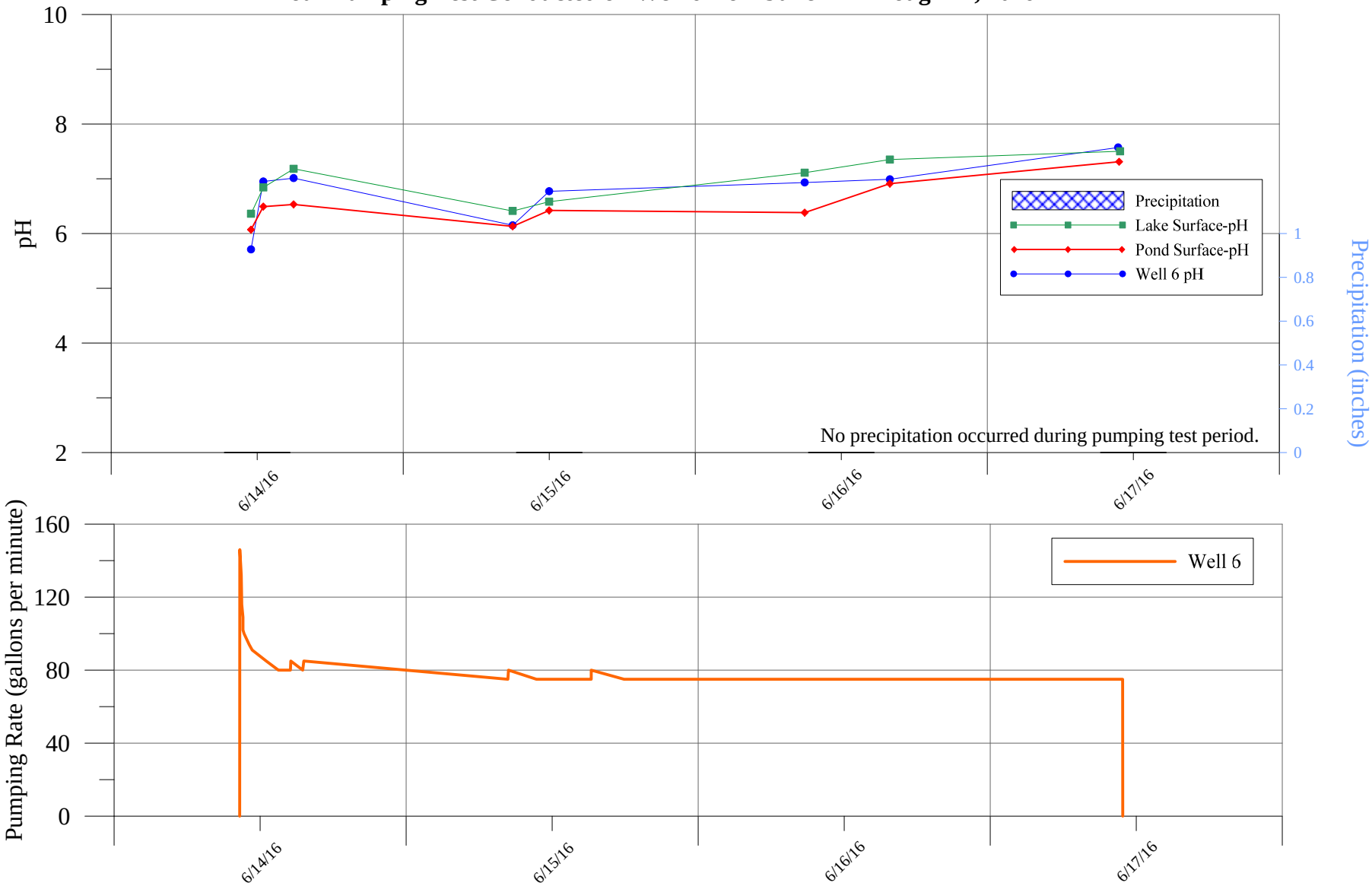

K:\Jobs\American Water Co\Wild Oaks\72-Hour Pumping Test (June 2016)\Hydrographs\Physical Parameters\Well 6 pH.grf

LEGGETTE, BRASHEARS & GRAHAM, INC.

NEW YORK AMERICAN WATER COMPANY
WILD OAKS WATER SYSTEM
LEWISBORO, NEW YORK

Temperature Measurements Collected from Well 6 and Surface-Water From Onsite Pond and Lake During 72-Hour Pumping Test Conducted on Well 6, from June 14 Through 17, 2015

Date	Time	Well 6 Temperature (degrees Fahrenheit)	PZ-D Pond Temperature (degrees Fahrenheit)	PZ-E Lake Temperature (degrees Fahrenheit)
6/14/2016	0:00	52.01	62.84	59.02
6/14/2016	1:00	52.01	62.84	59.02
6/14/2016	2:00	52.01	62.86	59.02
6/14/2016	3:00	52.01	62.84	59.03
6/14/2016	4:00	52.01	62.86	59.03
6/14/2016	5:00	52.01	62.86	59.03
6/14/2016	6:00	51.99	62.86	59.04
6/14/2016	7:00	51.99	62.86	59.04
6/14/2016	8:00	52.01	62.86	59.05
6/14/2016	9:00	51.99	62.86	59.05
6/14/2016	10:00	52.01	62.86	59.06
6/14/2016	11:00	52.30	62.86	59.06
6/14/2016	12:00	52.39	62.86	59.07
6/14/2016	13:00	52.39	62.86	59.07
6/14/2016	14:00	52.42	62.86	59.08
6/14/2016	15:00	52.39	62.86	59.08
6/14/2016	16:00	52.42	62.86	59.09
6/14/2016	17:00	52.55	62.86	59.09
6/14/2016	18:00	52.42	62.86	59.09
6/14/2016	19:00	52.44	62.86	59.10
6/14/2016	20:00	52.46	62.84	59.10
6/14/2016	21:00	52.46	62.84	59.10
6/14/2016	22:00	52.48	62.84	59.10
6/14/2016	23:00	52.44	62.84	59.12
6/15/2016	0:00	52.46	62.84	59.12
6/15/2016	1:00	52.46	62.84	59.12
6/15/2016	2:00	52.48	62.86	59.13
6/15/2016	3:00	52.66	62.86	59.14
6/15/2016	4:00	52.62	62.86	59.14
6/15/2016	5:00	52.66	62.86	59.15
6/15/2016	6:00	52.71	62.89	59.15
6/15/2016	7:00	52.73	62.89	59.17
6/15/2016	8:00	52.71	62.91	59.17
6/15/2016	9:00	52.48	62.91	59.17
6/15/2016	10:00	52.48	62.93	59.18
6/15/2016	11:00	52.48	62.93	59.20
6/15/2016	12:00	52.48	62.95	59.20
6/15/2016	13:00	52.51	62.95	59.21
6/15/2016	14:00	52.48	62.95	59.22
6/15/2016	15:00	52.48	62.95	59.23
6/15/2016	16:00	52.48	62.95	59.24
6/15/2016	17:00	52.51	62.95	59.25
6/15/2016	18:00	52.48	62.95	59.25
6/15/2016	19:00	52.48	62.95	59.26
6/15/2016	20:00	52.51	62.95	59.27
6/15/2016	21:00	52.51	62.95	59.28
6/15/2016	22:00	52.51	62.98	59.29
6/15/2016	23:00	52.51	62.98	59.30
6/16/2016	0:00	52.51	63.00	59.29
6/16/2016	1:00	52.46	63.02	59.31
6/16/2016	2:00	52.46	63.02	59.32

NEW YORK AMERICAN WATER COMPANY
WILD OAKS WATER SYSTEM
LEWISBORO, NEW YORK

Temperature Measurements Collected from Well 6 and Surface-Water From Onsite Pond and Lake During 72-Hour Pumping Test Conducted on Well 6, from June 14 Through 17, 2015

Date	Time	Well 6 Temperature (degrees Fahrenheit)	PZ-D Pond Temperature (degrees Fahrenheit)	PZ-E Lake Temperature (degrees Fahrenheit)
6/16/2016	3:00	52.46	63.07	59.33
6/16/2016	4:00	52.48	63.09	59.34
6/16/2016	5:00	52.46	63.11	59.35
6/16/2016	6:00	52.46	63.14	59.36
6/16/2016	7:00	52.48	63.16	59.37
6/16/2016	8:00	52.48	63.18	59.39
6/16/2016	9:00	52.48	63.21	59.40
6/16/2016	10:00	52.48	63.25	59.42
6/16/2016	11:00	52.51	63.25	59.44
6/16/2016	12:00	52.48	63.27	59.45
6/16/2016	13:00	52.48	63.30	59.46
6/16/2016	14:00	52.78	63.30	59.48
6/16/2016	15:00	52.51	63.32	59.50
6/16/2016	16:00	52.53	63.34	59.51
6/16/2016	17:00	52.53	63.34	59.53
6/16/2016	18:00	52.51	63.34	59.55
6/16/2016	19:00	52.53	63.34	59.56
6/16/2016	20:00	52.53	63.36	59.58
6/16/2016	21:00	52.53	63.36	59.59
6/16/2016	22:00	52.53	63.36	59.60
6/16/2016	23:00	52.53	63.39	59.62
6/17/2016	0:00	52.53	63.39	59.64
6/17/2016	1:00	52.53	63.41	59.65
6/17/2016	2:00	52.53	63.41	59.67
6/17/2016	3:00	52.53	63.43	59.68
6/17/2016	4:00	52.53	63.46	59.69
6/17/2016	5:00	52.53	63.46	59.71
6/17/2016	6:00	52.53	63.46	59.72
6/17/2016	7:00	52.53	63.48	59.74
6/17/2016	8:00	52.53	63.48	59.75
6/17/2016	9:00	52.53	63.48	59.76
6/17/2016	10:00	52.51	63.48	59.78
6/17/2016	11:00	52.87	63.48	59.80
6/17/2016	12:00	52.57	63.50	59.81
6/17/2016	13:00	52.39	63.50	59.83
6/17/2016	14:00	52.35	63.48	59.84
6/17/2016	15:00	52.37	63.48	59.85
6/17/2016	16:00	52.37	63.48	59.86
6/17/2016	17:00	52.37	63.46	59.88
6/17/2016	18:00	52.39	63.48	59.89
6/17/2016	19:00	52.39	63.48	59.90
6/17/2016	20:00	52.39	63.48	59.91
6/17/2016	21:00	52.39	63.48	59.93
6/17/2016	22:00	52.39	63.48	59.93
6/17/2016	23:00	52.39	63.48	59.95

NEW YORK AMERICAN WATER COMPANY
WILD OAKS WATER SYSTEM
LEWISBORO, NEW YORK

Temperature Measurements Collected from Well 6 and Surface-Water From Onsite Pond and Lake During 72-Hour Pumping Test Conducted on Well 6, from June 14 Through 17, 2015

Date	Time	Well 6 Conductivity (millisiemens per centimeter)	PZ-D Pond Conductivity (millisiemens per centimeter)	PZ-E Lake Conductivity (millisiemens per centimeter)
6/14/2016	11:30	0.295	0.286	0.211
6/14/2016	12:30	0.195	0.245	0.196
6/14/2016	15:00	0.189	0.22	0.195
6/15/2016	12:00	0.207	0.300	0.213
6/16/2016	9:00	0.204	0.275	0.218
6/16/2016	16:00	0.215	0.304	0.222
6/17/2016	10:45	0.211	0.314	0.216
Date	**Time**	**Well 6 pH (standard units)**	**PZ-D Pond pH (standard units)**	**PZ-E Lake pH (standard units)**
6/14/2016	11:30	5.71	6.07	6.36
6/14/2016	12:30	6.95	6.49	6.84
6/14/2016	15:00	7.01	6.53	7.18
6/15/2016	9:00	6.15	6.13	6.41
6/15/2016	12:00	6.77	6.42	6.58
6/16/2016	9:00	6.93	6.38	7.11
6/16/2016	16:00	6.99	6.91	7.35
6/17/2016	10:45	7.57	7.31	7.50

K:\Jobs\American Water Co\Wild Oaks\72-Hour Pumping Test (June 2016)\Tables\Parameter meas.doc

PLATE

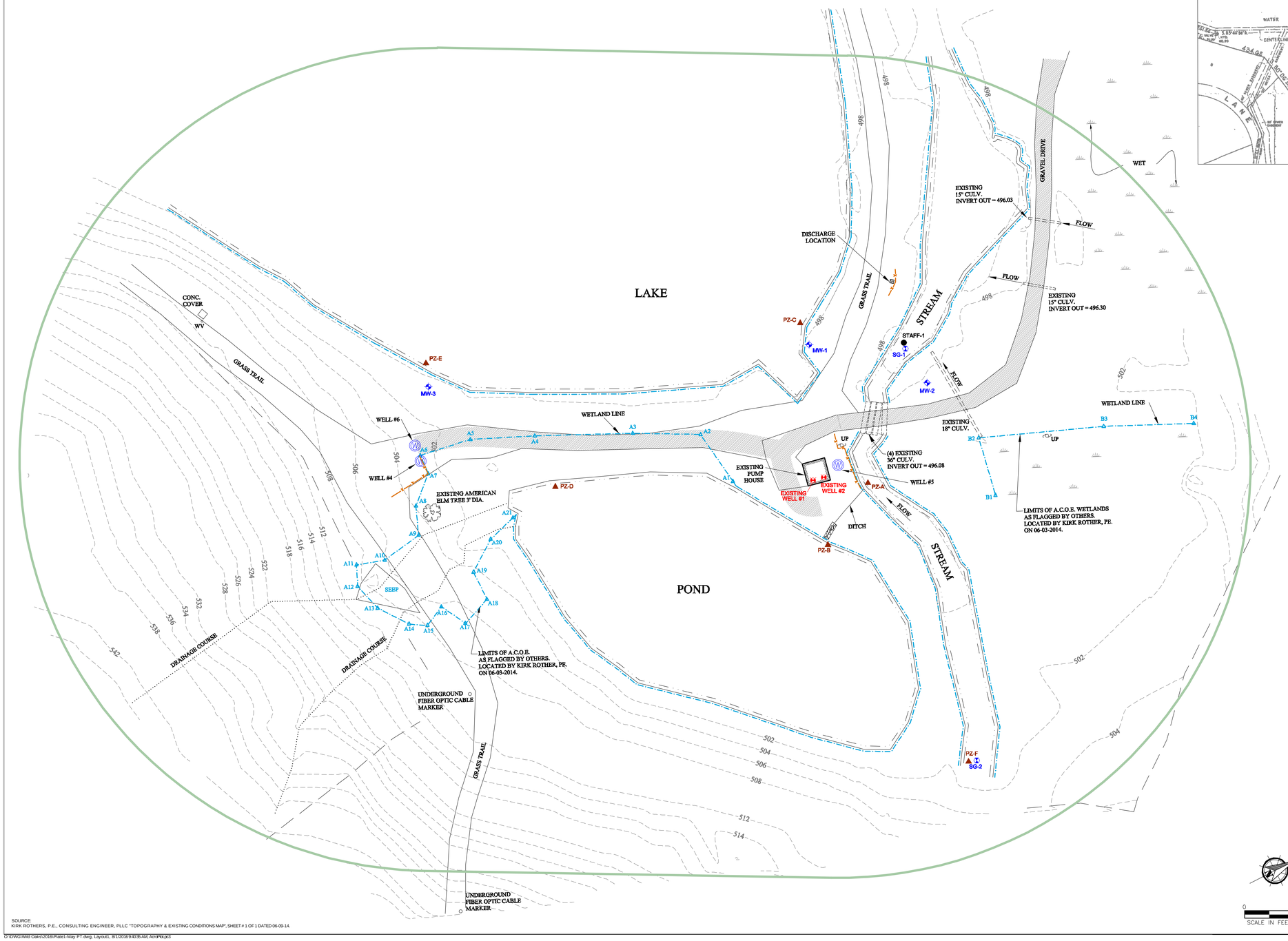

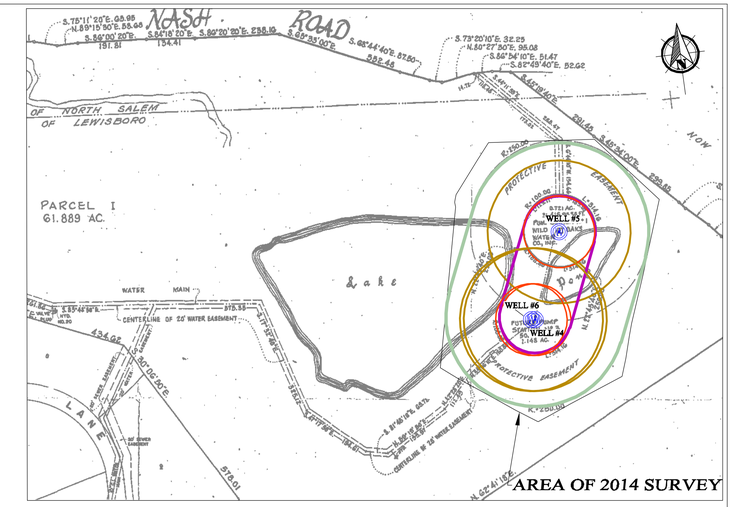

BLOW UP
1" = 200'

LEGEND

EXISTING PROPERTY LINE	
EXISTING CONTOUR LINE	
EXISTING EDGE OF GRAVEL	
EXISTING EDGE OF WATER	
EXISTING STONE WALL	
EXISTING DRAINAGE COURSE	
A.C.O.E. WETLAND BOUNDARY	A10 A11
EXISTING UTILITY POLE	
EXISTING SAND AND GRAVEL SUPPLY WELL	
EXISTING MONITOR WELL	
BEDROCK WELL LOCATION	
BOUNDARY FOR PROPERTY OWNED BY NEW YORK AMERICAN WATER COMPANY	
BOUNDARY FOR EXISTING PROTECTIVE EASEMENT FOR NEW YORK AMERICAN WATER COMPANY OVERLAID FROM EXISTING SITE PLAN MAP	
ACCESS ROUTE	
SILT FENCE/STRAWBALES	X X X X X X
100-FOOT RADIUS	
200-FOOT RADIUS	
DISCHARGE DURING 72-HOUR PUMPING TEST	
APPROXIMATE PIEZOMETER LOCATION	
APPROXIMATE STREAM GAGING LOCATION	
APPROXIMATE STAFF GAGE LOCATION	

GENERAL NOTES:
1. TOWN OF LEWISBORO, COUNTY OF WESTCHESTER, STATE OF NY.
2. TOPOGRAPHY AND MAPPING BY KIRK ROTHER, P.E. CONSULTING ENGINEERING, PLLC. FIELD WORK COMPLETED IN APRIL AND JUNE 2014. TOPOGRAPHY BASED ON AN ASSUMED DATUM.

SOURCE:
KIRK ROTHERS, P.E., CONSULTING ENGINEER, PLLC "TOPOGRAPHY & EXISTING CONDITIONS MAP", SHEET # 1 OF 1 DATED 06-09-14.

NEW YORK AMERICAN WATER
WILD OAKS WATER SYSTEM
LEWISBORO, NEW YORK

PUMPING TEST PROGRAM

DATE	REVISED

PREPARED BY:
LEGGETTE, BRASHEARS & GRAHAM, INC.
Professional Groundwater and Environmental Engineering Services
4 Research Drive
Suite 204
Shelton, Connecticut 06484
(203) 929-8555

DRAWN:	RAC	CHECKED:	SS	DATE:	08/01/16	PLATE:	1

O:\DWG\Wild Oaks\2016\Plate1-May PT.dwg, Layout1, 8/1/2016 9:40:35 AM, AcrdPlot.pc3

TOWN OF LEWISBORO
Westchester County, New York

Planning Board
PO Box 725
Cross River, New York 10518

Tel: (914) 763-5592
Fax: (914) 763-3637
Email: planning@lewisborogov.com

TO: **Town of Lewisboro Building Inspector**

FROM: **Jerome Kerner – Chairman, Town of Lewisboro Planning Board**

SUBJECT: **McGuinness Residence, 17 Schoolhouse Road, Waccabuc, NY 10597**
Sheet 22, Block 10802, Lot 35
Cal#3-16WV

DATE: **December 6, 2016**

The Planning Board received a verbal request from Peter McGuinness at its November 15, 2016 meeting to make the existing non-permitted openings associated with the garage and shed buildings weather tight. Mr. McGuinness is before the Board in connection with the above-referenced wetland violation.

At its meeting held on November 15, 2016, the Planning Board authorized the installation of windows and doors already on premises so that the unfinished space within the buildings would not be open to inclement weather. This authorization is merely to avoid winter-related damage and is not an approval or authorization of the garage and shed buildings. This authorization does not involve the issuance of a wetland permit and shall be limited to the installation of windows and doors already on premises within existing openings associated with the un-permitted garage and shed. This authorization does not allow for any site work or ground disturbance nor does it allow for any carpentry work not specifically associated with the installation of windows and doors, as determined by the Building Inspector in consultation with the Town Wetland Inspector.

The Planning Board also requested Mr. McGuinness to submit a formal Wetland permit application and establish a $2,000 escrow.

Ciorsdan Conran

From: Christine Vergati <cv@homelandtowers.us>
Sent: Monday, November 21, 2016 10:24 AM
To: Planning@lewisborogov.com
Cc: Manny Vicente; Eileen Tavolacci
Subject: Homeland Towers Request for Extension -NY486 Goldens Bridge, 117 Waccabuc Road

Good Morning Ciorsdan,

Homeland Towers respectfully requests a 90-day extension of time to submit the Wetland Mitigation Status Report, due on December 1, 2016, per Planning Board Resolution Condition #41. Please note that we are currently waiting for our vendor to complete the report. Thank you.

CAL. #5-12 PB
117 Waccabuc Road
Sheet 11, Block 11137, Lots 35 & 52

Regards,

Christine Vergati

HOMELAND TOWERS

Homeland Towers, LLC
22 Shelter Rock Lane, Building C
Danbury, CT 06810
Office: (203) 297-6345
Cell: (914) 589-3750
Fax: (203) 797-1137
Email: cv@homelandtowers.us

CONFIDENTIALITY NOTICE:

This message originates from the firm of Homeland Towers, LLC. The information contained in this e-mail and any files transmitted with it may be a confidential communication or may otherwise be privileged and confidential and part of the work product doctrine. If the reader of this message, regardless of the address or routing, is not an intended recipient, you are hereby notified that you have received this transmittal in error and any review, use, distribution, dissemination or copying is strictly prohibited. If you have received this message in error, please delete this e-mail and all files transmitted with it from your system and immediately notify Homeland Towers, LLC by sending a reply e-mail to the sender of this message. Thank you.